Energy, Mines and Resources Canada
Energie, Mines et Ressources Canada

CANMET
Canada Centre for Mineral and Energy Technology
Centre canadien de la technologie des minéraux et de l'énergie

SPRAY IGNITION TEST FOR MINE HYDRAULIC FLUIDS OPERATING PROCEDURE

N.K. Sarin

Canadian Explosive Atmospheres Laboratory

AUGUST 1988

MINING RESEARCH LABORATORIES
DIVISIONAL REPORT MRL 88-62 (TR)

MRL 88-62(TR) c.

SPRAY IGNITION TEST FOR MINE HYDRAULIC FLUIDS OPERATING PROCEDURE

N.K. Sarin*

ABSTRACT

This report describes one of the several tests performed on mine hydraulic fluids in accordance with CSA standard M423/87. Emphasis is placed on the sequence of operations and safety procedures necessary while carrying out the spray ignition test. The test is intended to determine the fire-resistance of several types of hydraulic fluids used in mining machinery. Schematic diagrams of the test facility, equipment, and a circuit diagram of the related instrumentation are presented at the conclusion, along with samples of test recording sheets.

KEYWORDS: Hydraulic fluids, fire-resistance, testing, procedures, standards, mines, fires, safety, certification.

* Investigation Officer, Canadian Explosives Atmospheres Laboratory, Mining Research Laboratories, CANMET, Energy, Mines and Resources, Canada, Ottawa.

ESSAI D'ALLUMAGE PAR PULVÉRISATION DES FLUIDES HYDRAULIQUES QUI ACTIVENT LES MÉCANISMES DE L'ÉQUIPEMENT UTILISÉ POUR LES TRAVAUX D'EXPLOITATION MINIÈRE

N.K. Sarin*

RÉSUMÉ

Le rapport comprend une description de l'un des nombreux essais auxquels ont été soumis des fluides hydrauliques utilisés pour les travaux d'exploitation minière, conformément à la norme M423/87 de l'Association canadienne des normes (ACNOR). Une attention particulière est accordée au schéma de fonctionnement et aux mesures préventives de sécurité en vigueur pendant que se déroule l'essai d'allumage par pulvérisation. L'essai vise à déterminer la résistance au feu de plusieurs genres de fluides hydrauliques. Des schémas de l'installation d'essai, de l'équipement et un diagramme du circuit de l'appareillage connexe sont présentés dans la conclusion de même que des exemplaires des fiches techniques utilisées au cours de l'essai.

MOTS CLÉS: Fluides hydrauliques, résistance au feu, essai, marche à suivre, normes, mines, incendies, feu, sécurité, certification ou homologation.

* Investigateur, Laboratoire canadien de recherche sur les atmosphères explosives, Laboratoires de recherche minière, CANMET, Énergie, Mines et Ressources Canada, Ottawa.

CONTENTS

TABLES

FIGURES

INTRODUCTION

Hydraulic fluids are used extensively in the hydraulic power systems of mining machinery, including diesel engine-powered and electrically-powered machines. Flammable fluids present a potential hazard due to fires and toxic gases which may result from accidental hose leakage and impingement of fluid sprays on hot machine surfaces, such as the exhaust manifold of an internal combustion engine. High temperatures, fluid degradation in use, faulty installation, and poor maintenance can contribute to leakage under high pressures. Flammable fluids can also enhance the possibility of fire or explosion in a mining environment, particularly in gassy mines.

In addition to research and development activities, CEAL has tested over 200 hydraulic fluid samples during a span of about 10 years. These fluids are classified into four main categories according to an ISO designation; i.e. water-based emulsions, water-glycols, phosphate esters, and blends of various hydrocarbons. The synthetic fluids derive their fire-resistance from inherent molecular structure, whereas the water-based family depends heavily on water content for the same property. Some of the synthetic fluids tend to lose their fire-resistance during usage. For this reason, CSA standard M423 requires preconditioning of such fluids prior to carrying out flame tests.

The spray ignition test was devised to simulate the accidental leakage and spray of hydraulic fluids under pressure in mining environments. Since it is difficult to cover all possible conditions of such an accident, only one standard set of test parameters is used in order to determine fire-resistance on a subjective basis; i.e. this test represents the relative fire-resistance of one fluid against the other. Although there are several variables affecting the fire-resistance in this test, only the continuous burning time after removal of the ignition source is considered an adequate criterion at present.

NCB - National Coal Board, U.K.
MSHA - Mine Safety & Health Administration, USA.
FMC - Factory Mutual Corporation, USA.
ISO - International Standards Organization.

The products of combustion of some hydraulic fluids are extremely harmful to health. Consequently, great care is necessary in handling these products, especially during testing.

THE SPRAY IGNITION TEST

a) Summary

A sample of heated fluid is pressurized in a vessel by compressed nitrogen (NO2) and released through the orifice of a combustion nozzle. The atomized spray is ignited with a forced air propane torch regulated to control the flame. Continuous burning times are recorded after removal of the ignition source during two sets of ten such trials. The tests are conducted in ventilated conditions inside an enclosed chamber while the process is remotely controlled from the outside.

b) Test Parameters

1. Operating pressure - 6.9 ± .1 MPa (1000 ± 30 psi).
2. Test temperature - 65 ± 1°C for water-based fluids.
   85 ± 1°C for synthetic fluids.
3. Orifice rating - An oil burner nozzle rated to 1 USGPH conforming to CSA standard B140.2.2.
4. Ambient temperature - 20 ± 2°C before starting the test.
5. Ventilation velocity - 0.45 ± .1 m/sec measured at a 150 mm radius around the nozzle.

c) Evaluation Criteria

1. The continuous burning time of the atomized fluid after removal of the ignition source shall not exceed 30 seconds during any of the ten consecutive trials, in two separate sets.

2. Should one of the trials indicate a burning time in excess of 30 seconds, during any of the two sets of ten trials, the tests are repeated to ensure that none of the burning times exceed 30 seconds. Otherwise, the product is considered to have failed to meet the fire-resistance criteria as per CSA standard M423/87.

EQUIPMENT AND MATERIALS

1. A water-jacketed pressure vessel of 1000 cc capacity, designed to 10.3 MPa (1500 psi) pressure rating and heated by two 250 W immersion heaters; (Refer to Fig. 1).

2. A combustion chamber of approximate size 2.9 m (8 ft) wide X 3.6 m (10 ft) long X 4.7 m (13 ft) high fitted with 75 mm (30 inch) dia X 14.5 m (40 ft) X high stack and a venturi type exhaust fan having a variable speed control panel located outside the test chamber. The test chamber walls are airtight and made of stainless steel construction; (Refer to Fig. 2).

3. A nitrogen gas cylinder (commercial quality) rated at 2000 psi fitted with appropriate pressure regulator and flow control valve.

4. A 5 pound portable propane gas cylinder rated at 0.41 MPa (60 psi) and fitted with proper pressure regulator, a flow control valve, and an in-line flame arrester.

5. The system pressure is monitored by an electronic transducer installed on the outlet pipeline of the pressure vessel. This transducer is designed for use at pressures up to 8.97 MPa (1300 psi) and puts out a 4 to 20 mA signal.

6. The fluid flow is controlled by a double-acting pneumatic valve situated on the outlet pipe between the vessel and the pressure transducer. The valve is actuated by a three-way valve located

on the control panel. Nominal valve pressure is 0.55MPa (80 psi).

7. The outlet pipe 6 mm or (¼ inch) I.D. is heated by a heating tape wrapped around the pipe. This tape is 500 W capacity, powered by a 115V supply through a temperature controller.

8. J-type thermocouples are used to monitor the temperatures near the nozzle point and the water bath around the pressure vessel. A separate temperature controller is used to maintain the fluid temperature in the vessel at the desired level.

9. The spray nozzle is rated at 3.79 LPH (1.0 USGPH), 80 degress hollow cone type NS produced by Monarch Co in the US. It is in fact a standard combustion nozzle used on domestic oil burners.

10. The ignition source is a propane torch housed in a 32 mm (1¼ inch) dia tube for pre-mixing with a regulated air supply. The torch arm is actuated by two hydraulic control units, one located on the control panel and the other one attached to the torch arm.

11. The structure holding the ignition torch may be moved manually on a roller track in order to locate the torch at the desired distance from the nozzle tip.

12. The fresh air enters the chamber from under the floor and then is deflected forward from behind the vessel to align with the flow direction of the fluid spray. The inlet duct openings are regulated by the suction pressure of the venturi fan above. A makeup air duct heater ensures that the temperature of the makeup air is 20°C before it enters the chamber during the winter months.

13. Drip trays are installed under the chamber floor grid in order to catch the unburnt and spilled fluids.

14. The air velocity is monitored continuously by a turbine type probe located near the nozzle and connected to the chart recorder through an analog type anemometer.

15. A three pen chart recorder monitors nozzle temperature, ventilation velocity around the nozzle and the system pressure, continuously during the test.

16. A digital stop watch, accurate to 0.1 seconds, is used to record continuous burning times.

17. A portable spark type torch igniter.

18. A portable digital velometer to double check the air ventilation velocity whenever in doubt.

19. A 1000 W heater and stirrer combination for preheating and stirring the test fluid.

20. Water supply hose near the water-jacket to ensure enough water in the jacket at all times.

21. Glass beakers of various sizes ranging between 1000-3000 cc.

22. Two gas masks.

23. Six dark-coloured safety glasses.

24. Adjustable spanner for removing and installing the nozzle.

25. A 50 cm (18 inch) long steel ruler to adjust the distance between the torch and the nozzle.

26. A 10 cc vacutainer tube for retaining fluid samples.

27. Three, five-gallon drums with flasks to discard three separate categories of fluids after use. These drums are to be marked "Emulsions", "Synthetics" and "Glycols" to prevent inter-mixing.

28. Isopropyl alcohol for flushing and cleaning the pressure vessel and the transfer containers, i.e. beakers etc.

29. Plenty of cleaning rags.
30. Shoe covers made of paper.
31. Lab coats.
32. Rubber gloves.

SEQUENCE OF OPERATIONS

1. Mark the fluid containers received from the client with a CEAL sample number as entered in the log book for hydraulic fluids. Draw 10 cc sample in a vacutainer tube; seal it with a rubber stopper; and mark the tube with the same identification number for future reference.

2. In the event that the fluid has been preconditioned at CEAL, allow a minimum of 12 hours of storage time before testing.

3. Switch on the main power to the control panel and set up the temperature controllers for the nozzle and the test fluid to the required limit according to the type of fluid under investigation; i.e. 65°C for water-based fluids and 85°C for synthetics.

4. Check the nitrogen gas cylinder to ensure that there is an adequate pressure of at least 7.58 MPa (1100 psi) available, otherwise replace the cylinder with a new one. Make sure that the pressure regulator is properly installed and that there are no gas leaks.

5. Repeat step #4 for the propane cylinder, except that the pressure setting on the regulator should not exceed 0.07 MPa (10 psi).

6. Whenever a new fluid is to be tested, flush the pressure vessel with 500 cc of this fluid under nitrogen pressure before charging an additional 1100 cc of preheated and/or preconditioned fluid.

7. Start preheating 1100 cc of the test fluid in a 2000 cc glass beaker using the magnetic stirrer and 1000 W heater unit. As soon as the temperature reaches about 15°C below the test temperature, transfer this fluid to the pressure vessel after opening the inlet and bleed valve on the pressure vessel assembly.

8. Open the hatch door of the exhaust stack from inside the combustion chamber and shut all the doors in the fluids laboratory. Start the ventilation fan and adjust the variac dial of the fan speed control to a setting of about 8 or 9. This should give a ventilation velocity of 0.45 m/sec. Wait until the velocity is in a steady state condition. If difficulty is encountered in reaching the steady state condition, the test should be postponed until the fan control is functioning properly and outside wind does not cause turbulent conditions in the chamber.

9. Check the temperature of the nozzle and the test fluid with the digital pyrometer located on the control panel. When the test temperature has reached the required level, shut the inlet and bleed valves located on the pressure vessel assembly. Also, the fluid control valve should be in the closed position.

10. Open the nitrogen flow to the pressure vessel and adjust the pressure regulator to read 7.3 MPa (1060 psi). An extra 60 psi is applied to compensate for pressure loss whenever the fluid flow is turned on and to ensure 1000 psi at the nozzle point.

11. Switch on the chart recorder and set three channel pens to the zero position using the calibration knobs, but do not start the chart paper as yet. Now switch on the channels for the nozzle temperature and ventilation velocity and verify that the readings agree with the meters on the control panel. Next, open the fluid flow (pneumatic valve) briefly to see if the pressure rating is within the test range of 6.9 ± 0.1 MPa (1000 psi) on the chart recorder and make the necessary adjustments. Set the chart speed to 1 cm/hr and observe the ventilation curve for at least two minutes. It should oscillate close to 0.45m/sec when the test chamber entrance door is fully shut.

12. Once the ventilation velocity is steady, open the chamber door and light the propane torch while the other operator opens the propane gas flow simulatenously. When the propane is ignited, open the air flow and adjust the pressure on the regulator situated near the visitor's observation window until the flame is 100 ± 10 mm (4 inch) long with a sharp blue cone. This is achieved at less than 0.07 MPa (10 psi) air pressure. Always start the propane pressure around 0.021 MPa (3 psi) and gradually increase it, if necessary, to achieve the desired flame.

13. Check the hydraulic actuator performance from the control panel to ensure that the ignition torch swings through 60 degrees, cutting across the fluid spray path at right angles.

14. Move the ignition torch position manually to a distance of 15 cm (6 in) away from the nozzle tip.

15. Double check water level in the jacket around the pressure vessel. Ensure that jacket is full to about 1 cm (½ inch) below the lid. Use the water hose nearby if necessary.

16. Shut the combustion chamber door and other laboratory doors. Leave a notice on the main entrance worded as follows:

    "TEST IN PROGRESS - DO NOT ENTER".

The velocity around the nozzle vicinity is very sensitive and will be disturbed by door openings even with the makeup air supply in operation during the winter months.

17. Now record all product information on the test recording sheet and get ready for the actual test run.

18. Operator #1 controls the fluid flow and the ignition torch movement from the control panel whereas operator #2 uses a stop watch to record burning times and gives instructions to the operator #1 for starting and stopping the fluid flow. Operator #2 also keeps a close look at the nozzle temperature and ventilation velocity as read from the control panel instruments. As soon as the fluid is sprayed, ignition with the propane torch is applied for a brief period not exceeding one second. Once the ignited fluid extinguishes itself, the fluid flow is stopped immediately. Operator #2 also ensures that the chart recorder is operating properly and that chart speed is fixed at 1 cm/min.

19. Repeat the test after the smoke in the chamber has disappeared as seen from the observation window in front of the control panel. Also, make sure that all test parameters are within the test range before starting each trial. There is a tendency of the nozzle temperature to drop slightly and then rise to the required level. Carry on testing until 10 trials are completed.

20. Stop the chart recorder; enter the chamber after the smoke has disappeared and increase the distance between the torch and the nozzle to 45 cm (18 inch). Shut the door and return to the control room.

21. Restart the chart recorder and repeat steps 17 & 18 for ten trials again. Keep on recording the continuous burning times on the test record sheet. (Refer to Table 1).

22. Should the continuous burning time exceed 30 seconds in any one trial, repeat the entire set of ten trials again to confirm the results.

23. At the beginning of each trial, double check the ventilation velocity on the chart recorder to ensure that it does not exceed 0.55 m/sec or fall below 0.35 m/sec otherwise, the trial may be repeated but it is not mandatory.

24. Upon completion of the entire test cycle, switch off the main power to the control panel and the chart recorder.

25. Turn off the propane and nitrogen supply.

26. Enter the test chamber after the products of combustion have disappeared from the room (this takes about 2 to 3 minutes) and gently open the bleed valve to release the pressure.

27. Pour 200 cc of isopropyl alcohol into the pressure vessel; close the valves and pressurize the system. Now, close the chamber door and allow the alcohol to spray through the nozzle until it is exhausted from the vessel. This is to flush the vessel for future testing and to prevent contamination by different test fluids.

28. Having shut off all of the system, remove the spray nozzle; wash it with alcohol and replace it. A new nozzle should be used after approximately 100 hours service or after 50 fluid samples have been tested, whichever comes first. This is an arbitrary guide and, if the spray pattern appears to change, dismantle the nozzle and clean it with compressed air including the filter behind the nozzle. Should the spray pattern still not appear uniform during a test run, the nozzle must be replaced with a new one regardless of its service life.

29. Clean and replace all portable instruments where they generally belong.

30. Clean the observation windows from inside using alcohol soaked rags. Also, clean the beakers with alcohol for reuse. Whenever five-gallon drums for discarding the fluids are full, transfer the contents to the large 202 Litre (45 gallon) drums situated outside in the storage shed.

31. Retain sufficient quantity of all failed fluids. This is to defend our evaluation in the future, if challenged.

32. Record any malfunction of the equipment or instruments in the log book for spray ignition apparatus.

SAFETY PRECAUTIONS

1. During the tests, at least two operators should work together for safety reasons.

2. Unauthorized persons should not be allowed inside the combustion chamber.

3. Ensure that the propane line to the torch is fully secured and that no leaks are present, starting from the supply cylinder. Always light the propane torch just before the test is commenced and turn it off as soon as the test cycle is complete.

4. The nitrogen cylinder must be fastened against the wall-mounted hangers. Re-check leaks in the line with a soap solution or "Snoop" and seal the same whenever a new cylinder of nitrogen is installed.

5. Do not open the fluid inlet valve on the pressure vessel when the system is pressurized. Always release the pressure by slowly

opening the bleed valve prior to opening the inlet valve for adding fresh charges of test fluid or cleaning agent. Make sure that all valves on the pressure vessel are closed before the nitrogen pressure is applied.

6. Propane and nitrogen cylinders must never be located inside the combustion chamber.

7. Do not allow anyone to enter the test chamber while the test is in progress and while any visible trace of smoke or products of combustion are still present. Make sure that the chamber is purged with fresh air before entering the chamber for whatever reason.

8. Never leave the propane supply turned on for too long before igniting the torch. Two functions of lighting the torch and opening the propane supply should be done simulatenously by two operators. This is to prevent dangerous accumulation of propane.

9. The exhaust hatch inside the chamber must be open before the ventilation fan is switched on.

10. Make sure that the chamber door is shut properly before the test is commenced, otherwise toxic gases will spread inside the laboratory.

11. Safety glasses (preferably coloured) should be used for observing the flame during the test; visitors should also be encouraged to do the same. However, the glasses are not required if coloured mylar sheets are already applied permanently to the glass windows.

12. Keep the exit doors clear of any obstructions.

13. Test fluids and rejects should not be stored inside the fluids laboratory. Fluids should be kept on the receiving station just outside of the main entrance to the fluids laboratory.

14. During maintenance of the electrical apparatus, never touch any electrical conductors unless the main switch is turned off.

15. Skin contact with the fluids should be avoided since reactions have been observed on some individuals. Use rubber gloves provided in the laboratory.

16. Wear shoe covers provided in the laboratory. This is to reduce the possibility of injuries related to slipping while working inside the test chamber.

17. Check drip trays under the chamber floor and pump out the reject oil into a 202 Litre (45 gallon) drum whenever necessary.

18. Discard all oil-soaked rags into the proper steel-covered containers.

19. The used up cleaning agent (isopropyl alcohol) can be discarded into any drums reserved for fluid disposal.

20. Smoking is strictly forbidden in the laboratory at any time.

21. A CO_2 cylinder should be activated during a runaway accidental fire in the combustion chamber. The cylinder is located near the control room. Periodic inspection, to ensure proper functioning of the cylinder, is also desirable.

WARNING

The existing test procedure is fairly repeatable; however, the magnitude of ventilation velocity around the combustion zone is very

important in passing or failing the products under investigation. A very wide tolerance of 0.35 m/sec to 0.55 m/sec velocity can permit both a pass and a failure for the same product. At the lower end of the tolerance the product tends to fail, whereas the same product may pass just over 0.50 m/sec ventilation velocity, all other variables being constant. In this case, the wind practically snuffs out the flame. Therefore, it is important to start the test at a mean velocity of 0.45 m/sec. A responsible professional should be present during testing to verify the procedures and to advise the technicians, whenever necessary.

CONCLUSIONS

This document will serve to train new operators as well as to assist the present operators in carrying out the required tests in a safe, systematic, and organized manner. It will also provide food for thought for those who are concerned and responsible for improving the present evaluation criteria. Changes are inevitable as and when new methods and procedures are developed.

ACKNOWLEDGEMENTS

Many thanks to Mr. G. Lobay for editing this report and to Mr. J. Bossert for his suggestions. I also thank Ms. Janna Folta for drafting several sketches.

REFERENCES

1. NCB specification #570/1970; "Fire-resistant fluids for use in machinery and hydraulic systems".

2. N. Sarin & J. Bossert, "Interim certification requirements for fire-resistant hydraulic fluids". ERP/MRL 80-10(TR); CANMET, Energy, Mines and Resources, Canada; Division Report, 1980.

3. CSA standard CAN/CSA-M423-M87, "Fire-resistant hydraulic fluids Electrical & Mechanical Mine Safety".

4. Discussions and correspondence with CEAL management regarding interpretation of the CSA standard concerning hydraulic fluids.

TABLE 1

FIRE-RESISTANT HYDRAULAIC FLUIDS
SPRAY IGNITION TEST

A. GENERAL:

PRODUCT :
CLIENT :
MANUFACTURER:
WITNESS :

TEST DATE :
SAMPLE # :
OUR FILE :
OPERATOR :

B. TEST CONDITIONS:

1. PRECONDITIONED IN PUMP TO CYCLES/HOURS
2. AMBIENT TEMP:
3. FLUID TEMP :
4. NOZZLE TEMP :
5. SYS PRESSURE :
6. VENTILATION :
7. R. HUMIDITY :

C. OBSERVATIONS:

CONTINUOUS BURNING TIMES AFTER REMOVAL OF TORCH

D = Distance of Ignition Torch From Spray Nozzle

TRIAL	D =	Ventilation Vel		TRIAL	D =	Ventilation Vel	
		START	FINISH			START	FINISH
1				11			
2				12			
3				13			
4				14			
5				15			
6				16			
7				17			
8				18			
9				19			
10				20			

D. REMARKS:

E. VERDICT: PASS/FAIL

TABLE 2

MINING RESEARCH LABORATORIES
Canadian Explosive Atmospheres Laboratory

FIRE-RESISTANT HYDRAULIC FLUIDS
Summary of Test Report

File # ..... Date: .....
Manufacturer: ..... Client: .....
Test Purpose: .....

	FLUID 1	FLUID 2	FLUID 3
1. CEAL sample #			
2. Trade Name			
3. Type of Fluid			
4. % Water content (checked)			
5. Preconditioned			
6. Spray Ignition Test (CSA M423) a. Maxi burning time (secs) b. Ave burning time " c. Range of flammability			
7. Wick flammability (CSA M423) a. Maxi burning time (secs) b. Ave burning time " c. Range of flammability			
8. Oxygen Index of flammability			
9. Stability Tests: (CSA M423) a. Hot % water separation % oil separation b. Freeze Thaw: % water separation % oil separation			
10. Toxicity report from H & W			
11. Recommendations			
12. Remarks			

Legend:
N.R. - Not Required
N.A. - Not Available
Re - Retest
S.I. - Special Investigation
R - Reject
P - Pending

Investigation Officer

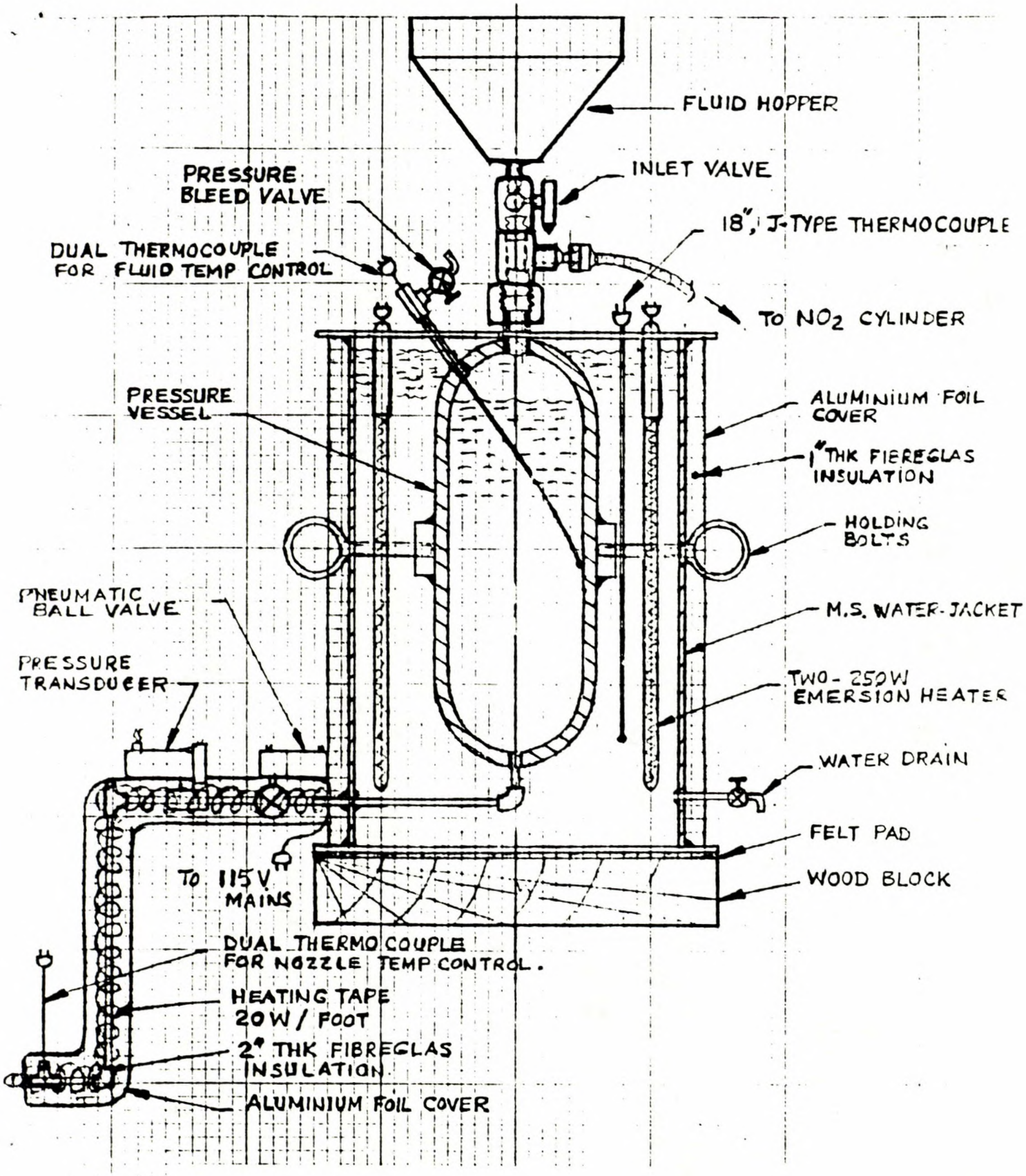

Fig. 1 - Pressure vessel assembly.

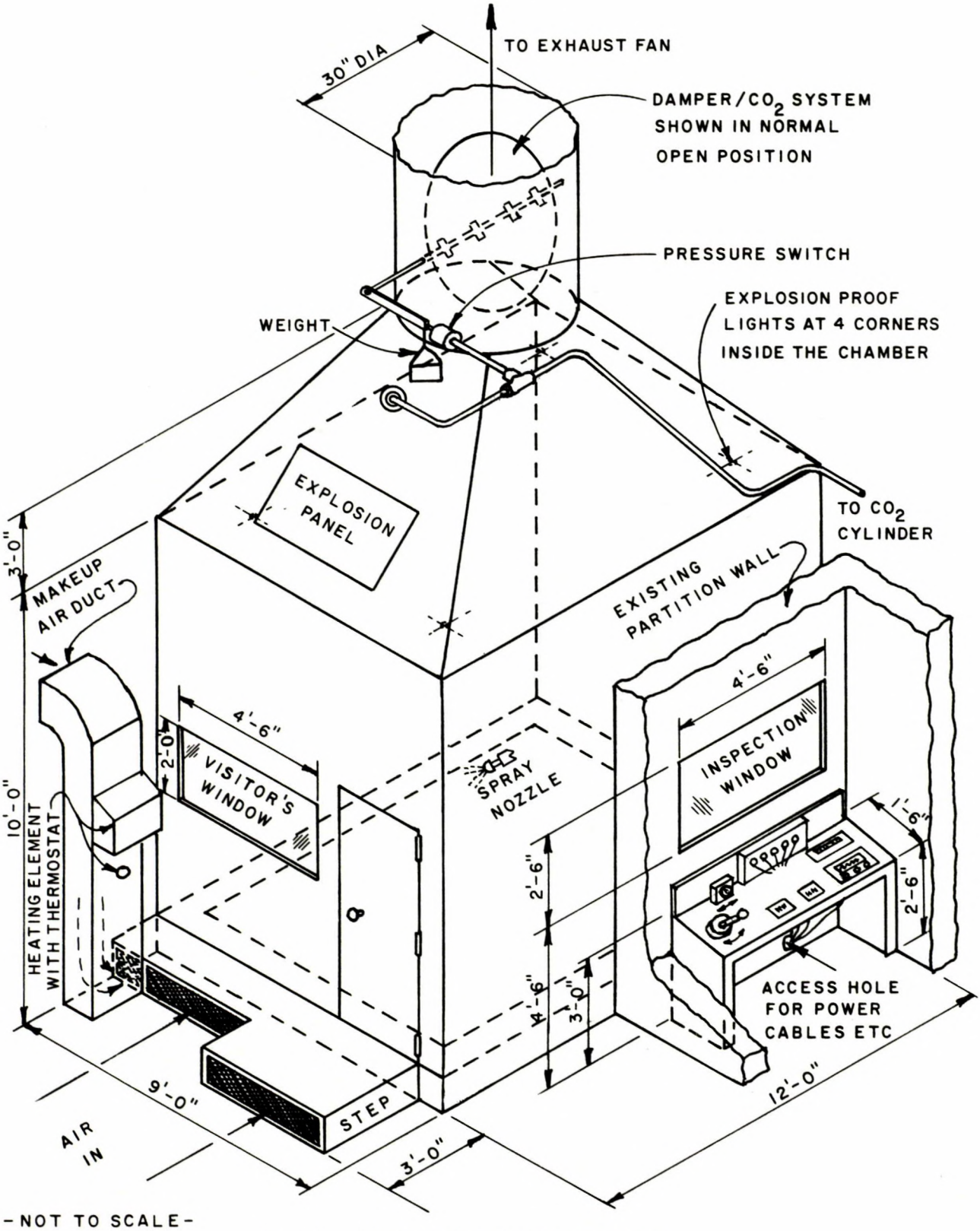

Fig. 2 - Fluid test chamber concept.

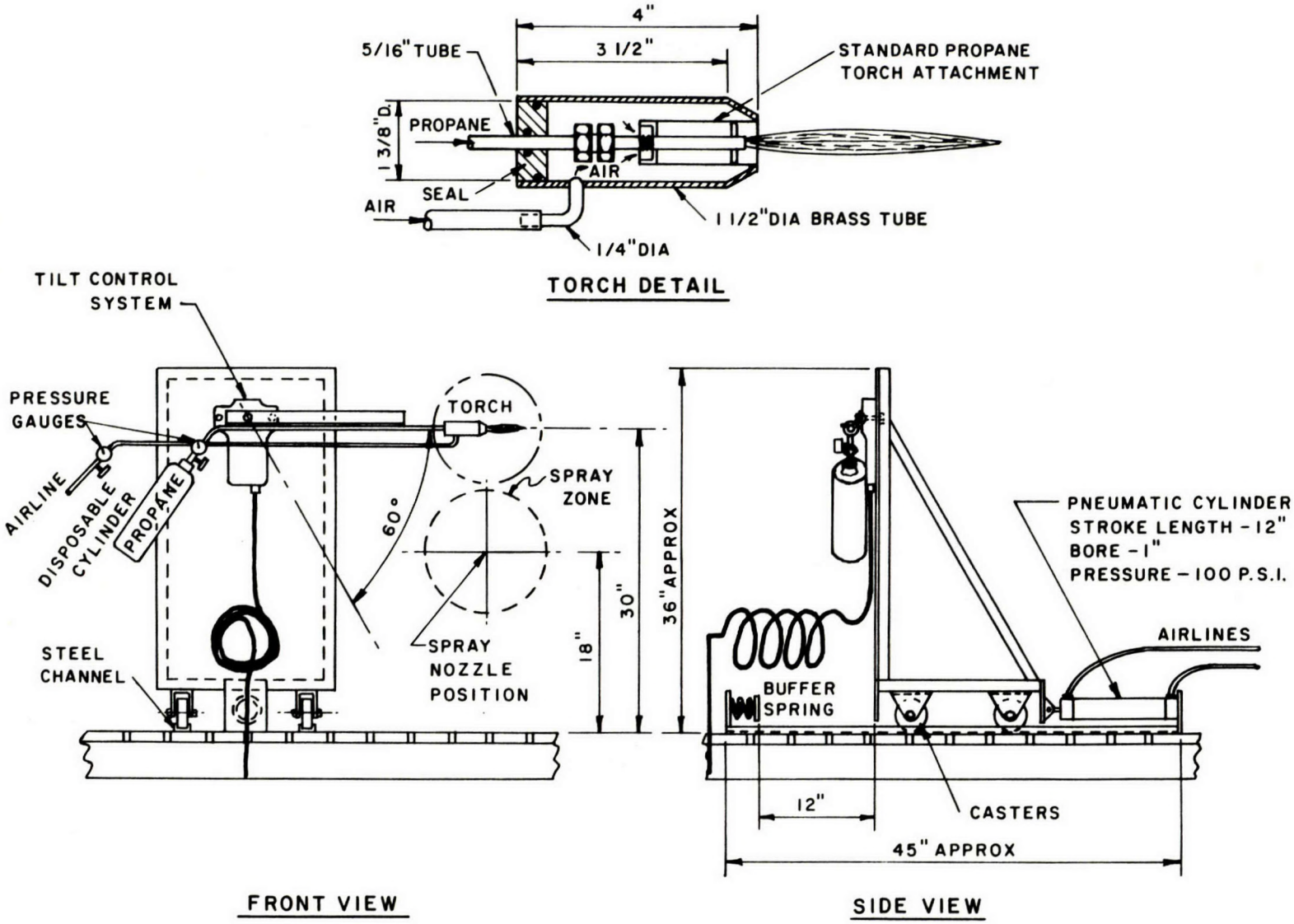

Fig. 3 - Ignition torch system.

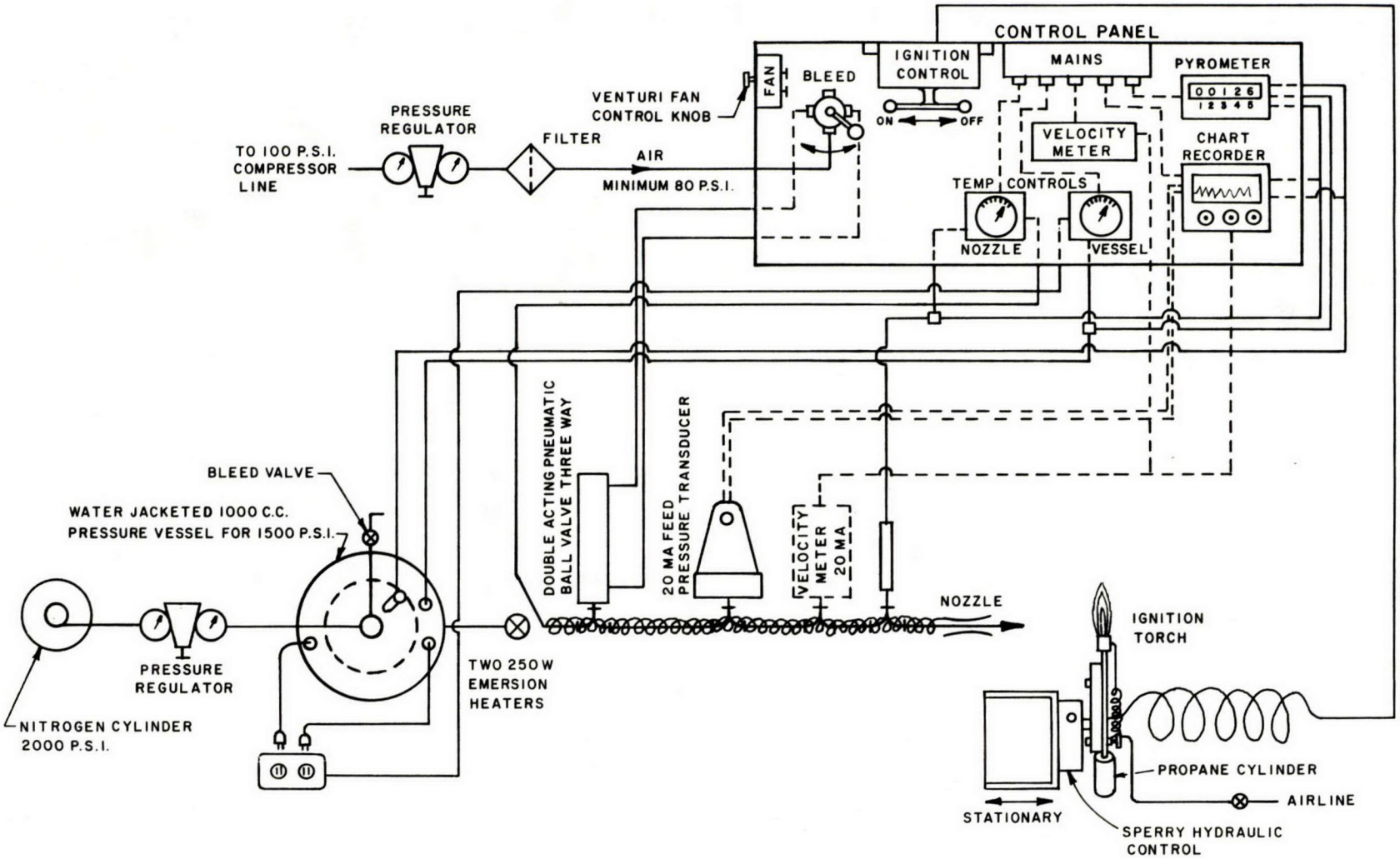

Fig. 4 - Spray ignition test schematic for remote control.