DEPARTMENT OF THE INTERIOR

HON. CLIFFORD SIFTON, MINISTER

REPORT

OF THE

COMMISSION

APPOINTED TO INVESTIGATE THE DIFFERENT

ELECTRO-THERMIC PROCESSES

FOR THE

SMELTING OF IRON ORES

AND THE

MAKING OF STEEL

IN OPERATION IN EUROPE.

Ottawa, 1st August, 1904.

Sir,—

I have the honour to transmit herewith:—

1st.—The report of the Commission appointed to investigate the electro-thermic processes for the smelting of iron ores and the making of steel, now in operation in Europe.

2nd.—The report of a special Commission appointed to investigate the Marcus Ruthenburg process of electric smelting of magnetite.

To these reports is added, in the appendix, a series of important papers on the subject of the electro-metallurgy of steel and iron, by Harmet, Gin and Stassano, and of copper by Vattier.

I have the honour to be,
Sir,
Your obedient servant,

EUGENE HAANEL,
Superintendent of Mines.

Honourable Clifford Sifton,
Minister of the Interior.

TABLE OF CONTENTS

Letter of instructions.

APPENDIX

LIST OF PLATES

LIST OF FIGURES

APPENDIX

HARMET—FIRST PART.

HARMET—SECOND PART.

GIN

STASSANO

LETTER OF INSTRUCTIONS.

Ottawa, 29th December, 1903.

Sir,—You are hereby commissioned to proceed to Europe for the purpose of investigating and reporting upon the different electro-thermic processes employed in the smelting of iron ores, and the making of the different classes of steel, now in operation, or in process of development, in Italy, France and Sweden.

The special object of this investigation is the ascertainment of all facts in connection with these processes, which are necessary for determining the cost of one ton of product, the quality of the product, and cost of machinery employed, and such other facts as may be required for the formation of a judgment regarding the feasibility of introducing successfully in Canada electro-thermic processes for the production of iron and steel.

It will, therefore, be your duty to avail yourself of all means necessary to obtain, as far as practicable, reliable and detailed information on this subject. It is desirable also to ascertain what patents have been issued to the different inventors of the processes of electric smelting, the countries where they have been issued, and full particulars thereof. It is desired also that photographs and accurate drawings (where necessary) of the various parts of apparatus and plants employed should accompany your report.

The following will constitute the members of the staff of the Commission, who are to act under your direction, performing the duties assigned them in this letter of instructions, and such other duties in their respective branches as you may find necessary to require of them in order to bring to a successful issue the object of the investigation:—

1st: Electrical Engineer.

Mr. C. E. Brown, E.E., Assistant Works Engineer of the Canadian General Electric Company, Peterborough, Ont., has been appointed as Electrical Engineer. It will be his duty to make or supervise all electrical measurements, and furnish you with a report of all electrical details of the investigation, and also with a description of the electrical machinery employed.

2nd: Metallurgist.

On your arrival in England you will engage a thoroughly competent iron and steel expert, who will act as the metallurgist of the Commission, and report to you the metallurgical details of the investigation, and make an examination of and report upon the qualities of the iron and steel produced by the various electro-thermic processes examined.

3rd: Photographer and Draftsman.

For the purpose of obtaining accurate representation of the different plants examined, you are instructed to employ a photographer and draftsman wherever and whenever their services may be required.

4th: A private secretary.

(Sgd.) CLIFFORD SIFTON,
Minister of the Interior.

Dr. Eugene Haanel,
Superintendent of Mines,
Department of Interior, Ottawa.

Fig. 1

General Section of Triple Furnace for Electro-Metallurgy of Iron

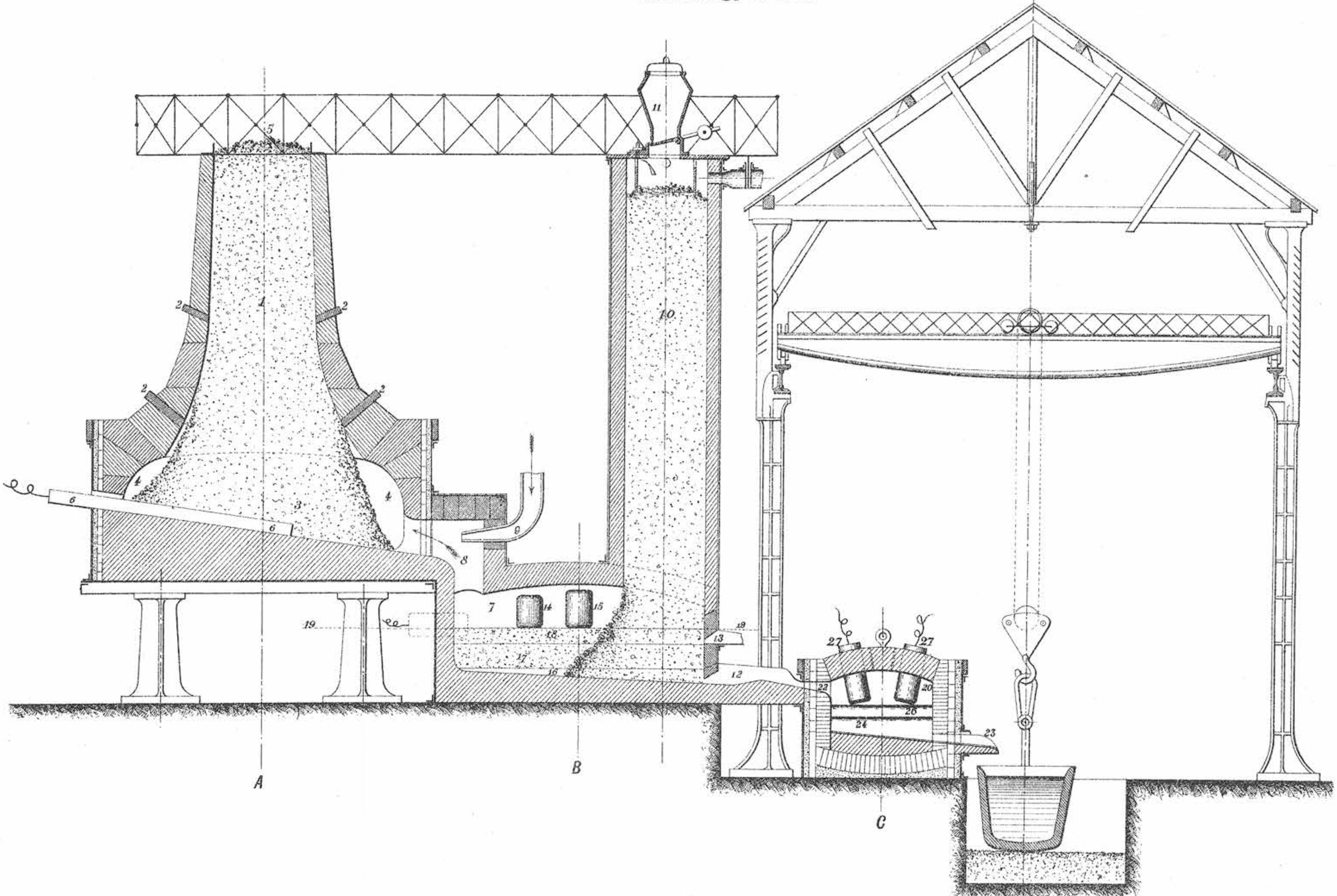

Scale 15 mm.= one meter

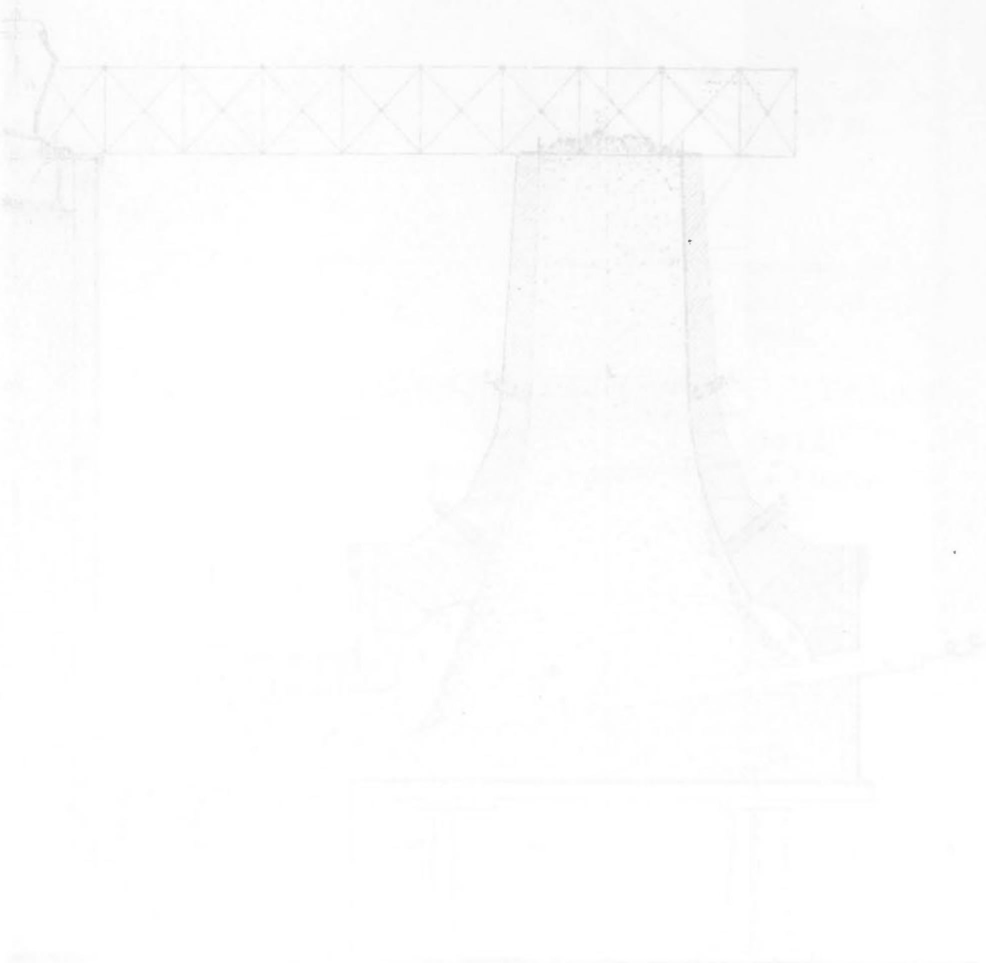

REPORT.

TABLE OF ERRATA

PAGE 23—In line nine from top, for $\frac{1.440}{70 \times 0.75}$ read $\frac{1.440 \times 1,000}{70 \times 0.75}$

PAGE 52—In table for kilo-volt amperes calibrated, read : kilo-volt amperes calculated.

PAGE 105—In sixth line from bottom, for 12 read 10.

FIGURES 27 and 28—For scale actual extension x 6, read: Scale actual extension x 1.5.

PAGE 148—In fourth line from bottom, for CO read CO_2.

PAGE 182—Transpose lines eleven and twelve from top.

PAGE 183—Dele line 7 from bottom.

electric smelting plants could be investigated : Gysinge and [illegible], Sweden; La Praz, France; Turin, Italy; and Livet, France.

GYSINGE.—KJELLIN PROCESS.

At the Gysinge works, steel of superior quality is made by the smelting together of charcoal-pig and scrap in electric furnaces of the Induction type, i.e., furnaces without electrodes. The process does not permit the purification of the materials entering into the composition of the steel produced, the quality of the steel depending entirely upon the purity of the component materials employed. The process, therefore, corresponds to the crucible steel process, but has cer-

REPORT.

The Commission, consisting of Mr. Brown, electrician; Mr. Nystrom, M.E., draftsman; Mr. Côté, secretary, and the writer, left Ottawa for England on the 21st January last. Arriving in England on the 30th January, I proceeded at once to find, in accordance with your instructions, a thoroughly competent man to act as metallurgist of the Commission, and succeeded in engaging the services of Mr. F. W. Harbord, Assoc. R.S.M., F.I.C., consulting metallurgist and analytical chemist to the Indian Government, Royal Engineering College, Cooper's Hill, and the author of an extensive work on the Metallurgy of Steel.

Shortly after my arrival in England I received a telegram from Mr. Benedicks, the manager of the Gysinge Steel Works in Sweden, to the effect that if I desired to examine his plant it would be necessary for the Commission to arrive in Sweden within a week from date of telegram, since the works would be shut down shortly in order to put in new and larger turbines. It became, therefore, necessary to start the investigations at the plant in Sweden.

The following are the localities visited, in the order named, where electric smelting plants could be investigated : Gysinge and Kortfors, Sweden; La Praz, France; Turin, Italy; and Livet, France.

GYSINGE.—KJELLIN PROCESS.

At the Gysinge works, steel of superior quality is made by the smelting together of charcoal-pig and scrap in electric furnaces of the Induction type, i.e., furnaces without electrodes. The process does not permit the purification of the materials entering into the composition of the steel produced, the quality of the steel depending entirely upon the purity of the component materials employed. The process, therefore, corresponds to the crucible steel process, but has certain advantages over the latter, in that the melted material is at no time during the operation exposed to gases, which absorbed, deleteriously affect the quality of the product; moreover, the absence of electrodes, employed in all other classes of electric furnaces, avoids contamination of the molten material with the impurities which may be contained in the electrodes.

The Furnace.

Description:—

The furnace, of 225 H.P. capacity, is the invention of Mr. Kjellin, and is of the induction type, corresponding to a step-down transformer. Fig. 1 represents a vertical section through the tap-spout, and Fig. 2 a horizontal section through A B. The primary A A fig. 1 consists of a coil of insulated copper wire wound about one leg of the magnetic circuit C C C C. The secondary is formed by the charge contained in the annular grove B B. To the primary an alternating current of 90 amperes and 3,000 volts is delivered. This current induces in the charge forming the single turn of the secondary, according to Mr. Kjellin, a current of 3,000 amperes at 7 volts. The conversion of electric energy due to the resistance of the charge takes place, therefore, in the substance of the charge.

The furnace consists of a cylindrical iron casing L L, partly closed at the base, resting upon the brick foundation E E. The casing is lined with fire brick D′ D′, and the portion D D (as shown in figs. 1 and 2) is filled in with the exception of the annular grove B B, and the space F with magnesite or silica brick, according as a basic or acid lining is required for the grove, which forms the melting space or crucible.

The space F F, surmounted by the iron cylinder F′, to which the pipe G is attached, serves the purpose of cooling the primary by the draft of air passing through it. In addition to the air draft, water circulation is employed to keep down the temperature in the space occupied by the primary. K K are covers for the annular crucible, and H the tapping spout.

The upper part of the furnace is (see Plate II) at the same level as the working floor and the charging is effected by simply removing the covers K K, and putting in the material. Since the heat is produced in the metal contained in the annular crucible, the slag which has formed is at a much lower temperature than in other steel furnaces, and as a consequence the workmen suffer little from the heat.

The following figures, which could not be determined by the Commission relating to the efficiency of the furnace, are given by Mr. Kjellin:

From a series of trial runs, the production with this furnace averaged 4,100 kgs. in 24 hours, with a power of 165 kilowatts, or 225 electric horse-power. The loss of heat by radiation, transformation, &c., at a temperature of 1,400° C, amounted to 80 kilowatts, this amount of energy being required to keep the temperature constant at 1,400° C.

The temperature of the fluid metal at tapping is from 1,600° to 1,700° C.

The total efficiency of the furnace is 45½%.

Plate I is a general view of the furnace in the act of being tapped. Plate II is a top view, showing to the right part of the magnetic circuit and the ventilating drum; to the left the electric measuring instruments in position for the determination of the electric energy input.

The cost of a furnace of this type of 600 H.P. is, according to Mr. Kjellin, about $4,000.

Measurements of Electric Energy.

Since the measurements of the absorption of electric energy constituted the most important factor in ascertaining the cost of producing steel by this method, and since I had no guarantee of the accuracy of the electric measuring instruments employed at the works, standard instruments were rented from David Bergman, Consulting Engineer in Stockholm, and placed in the circuit.

Mr. Brown reports for charges Nos. 546 and 547 an absorption of electric energy per ton of product of 0.116 and 0.145 electric horse-power years respectively. For further electrical details, refer to Mr. Brown's report, pages 45-51 and 58.

Cost of Steel by the Kjellin Process.

Mr. Harbord reports the estimated cost of steel by the Kjellin process to be $34.00 per ton of 2,000 lbs. For details entering into the calculation for the cost, such as cost of materials, wages, renewals, &c., see Mr. Harbord's report, pages 64-67.

The capacity of the furnace is comparatively small, but for a larger plant Mr. Kjellin states that three furnaces of the pattern now used might be joined into a compound furnace, and supplied with a 3-phase alternating current. This would treble the capacity and reduce the wages, since the number of workmen now employed in operating the one furnace could attend to all three.

Quality of the Steel produced.

Samples of the steel produced and of the materials employed were taken and shipped to England, to be tested as to quality and composition. For results of this investigation of the Gysinge Steel, see Mr. Harbord's report, pages 59-64, 68, 69, 79, 80, 82-86.

Cost of Power per Electric Horse-Power Year at Gysinge.

The following figures on which the cost of power per electric horse-power year, delivered at the furnace, is based, were furnished by Mr. Kjellin.

Cost of hydraulic canal	$22,000
Cost of power house	10,000
	$32,000

The quantity of water which can be delivered by the canal at low water is 22 cubic meters per second. The head is 3½ meters. Allowing an efficiency of 75% for the turbines, the available horse-power is 770.

225 horse-power are delivered to the furnace. Losses in generator, exciter and line, 40 H.P., a total of 265.

Part of cost of power house and canal to be charged to power for electric furnace is	$11,000
Cost of turbine	1,900
Installing turbine	500
Generator and exciter	5,850
Transmission line	1,000
Switch board and instruments	600
	$20,850
10% on first cost for interest, depreciation, repairs, taxes, insurance, &c	$2,085
The part of operating expenses which is chargeable to electric furnace	500
	$2,585

Cost of 225 horse-power delivered to electric furnace is $2,585, or $11.50 per electric horse-power year.

Plate III represents the power house at Gysinge.

PATENTS.

Finland	No. 1305	1st August	1900
France	" 305121	4th February	1901
Belgium	" 152666	31st October	1900
Hungary	" 19457	12th September,	1900
Italy	" 133-138	22nd February	1901
Austria	" 5049	1st May	1901
Germany	" 126606	2nd October	1901
Norway	" 9484	23rd October	1900
England	" 18921	23rd October	1900
Canada	" 73701	12th November,	1901
United States	" 682088	3rd September,	1901
Sweden	" 17494	4th September,	1900

PLATE I.

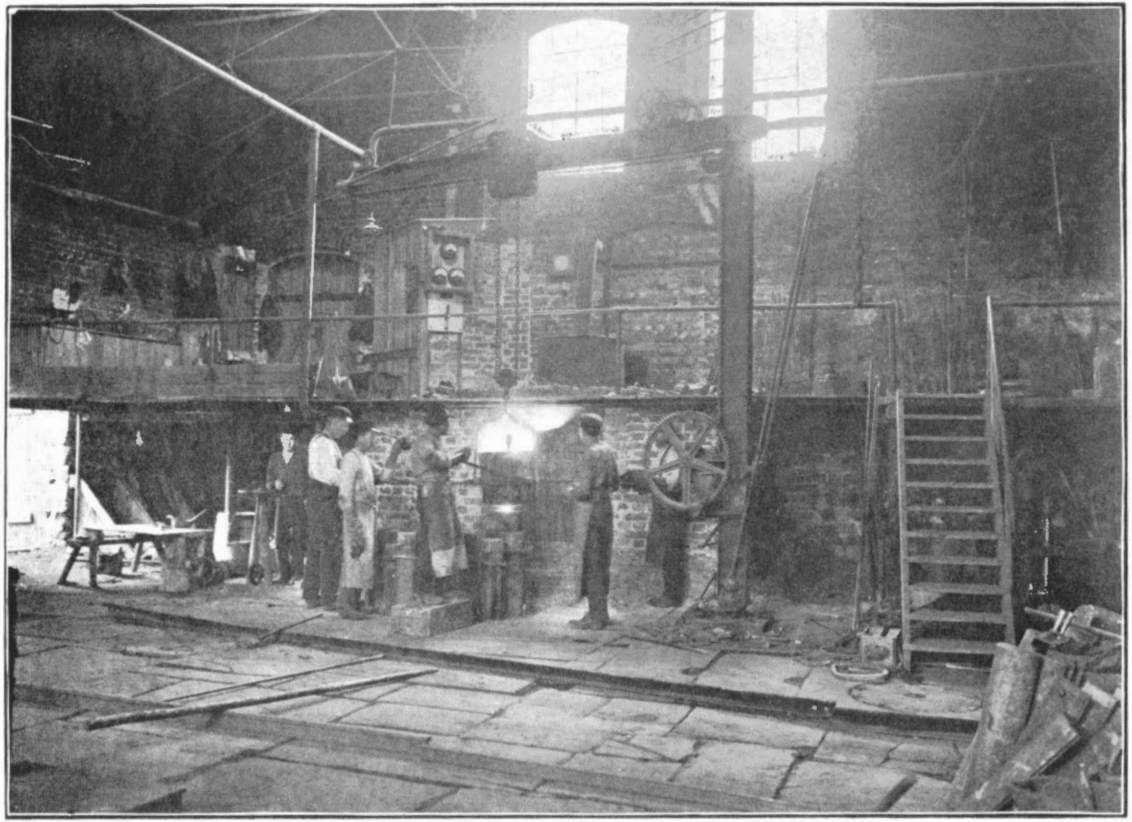

General View of Kjellin Furnace.

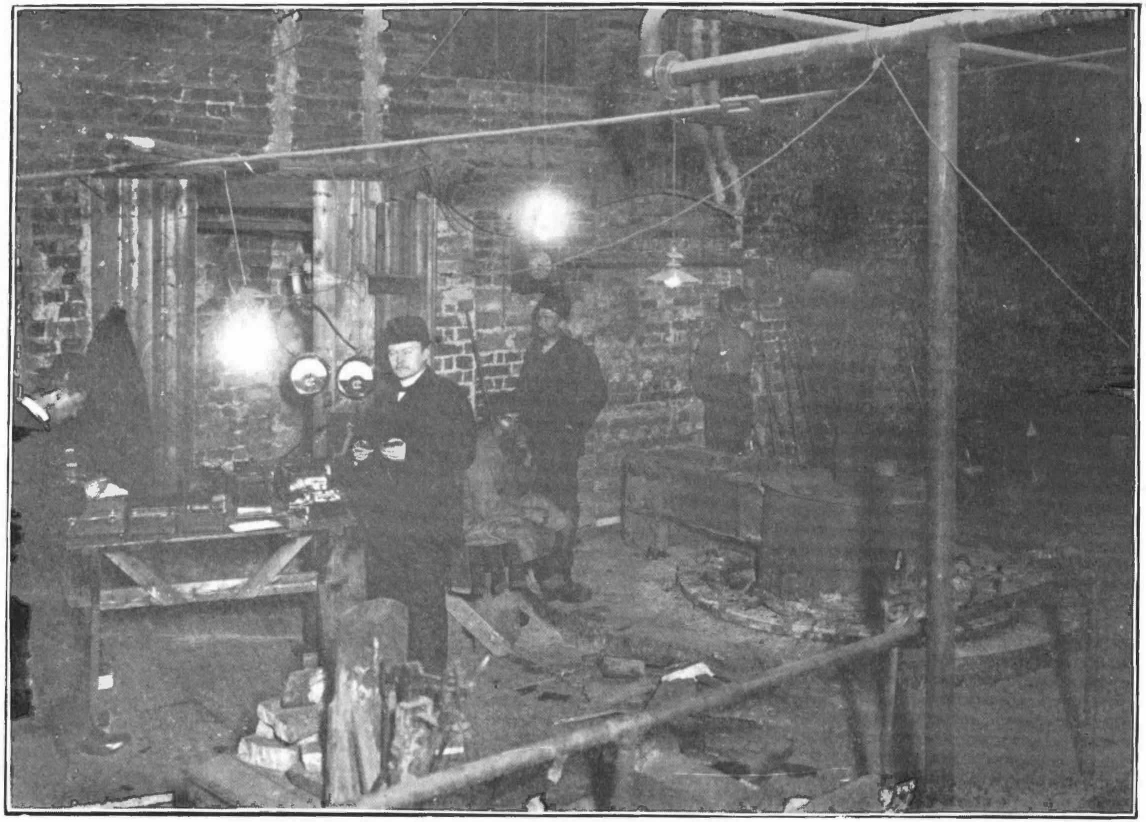

Top View of Kjellin Furnace.

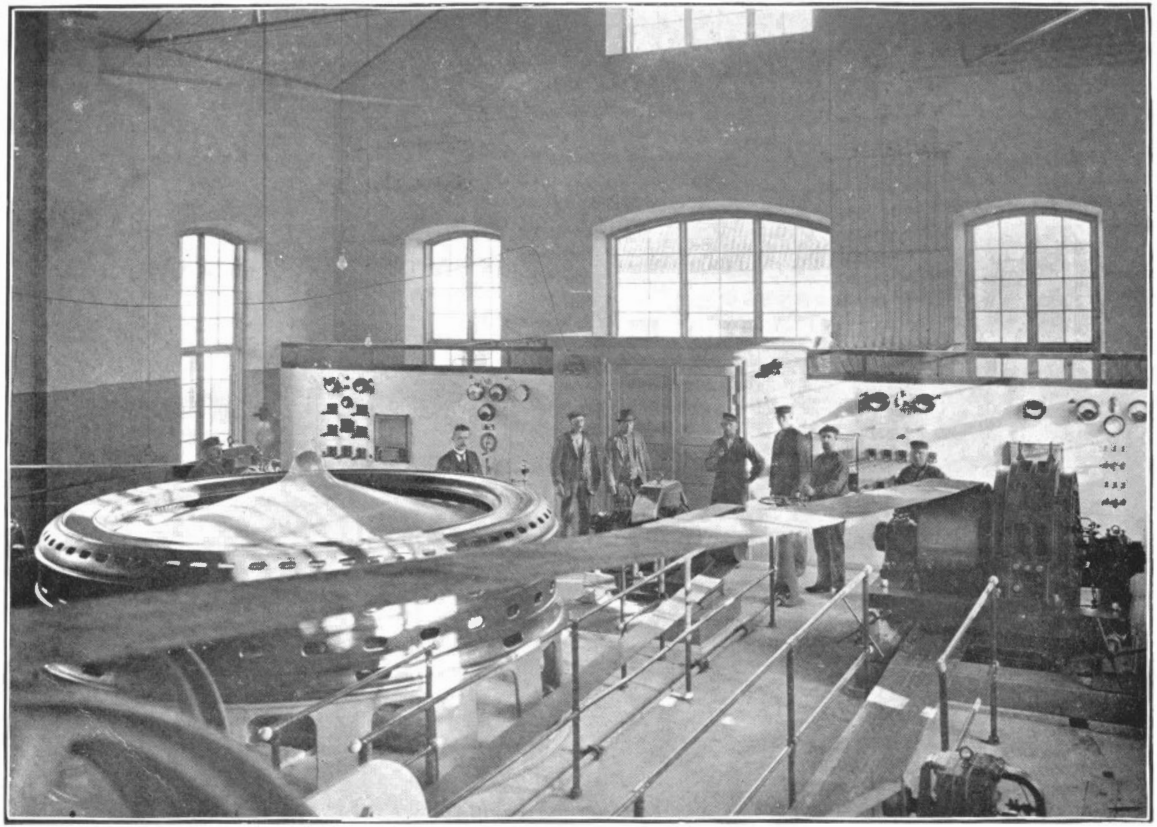

Power House, Gysinge.

Kjellin Furnace,

Gysinge, Sweden

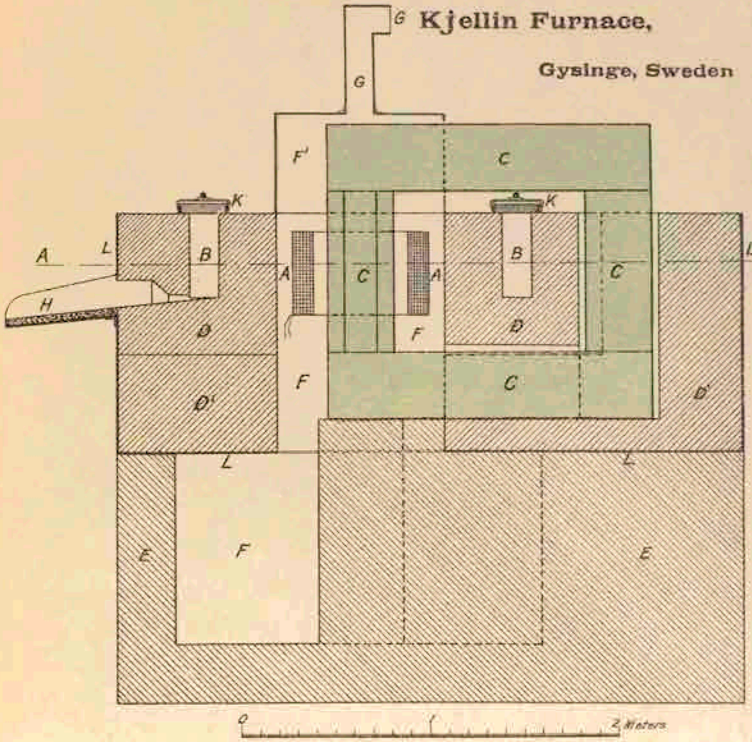

Fig. 1

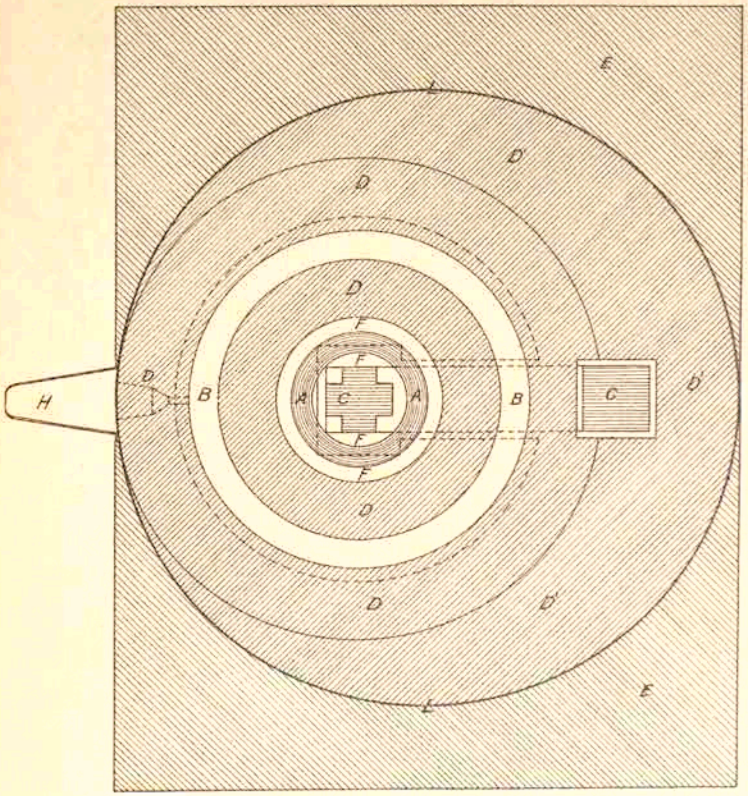

Fig. 2

Section A B

KORTFORS.—HÉROULT PROCESS.

From Gysinge the Commission proceeded to Kortfors, where the Héroult process of making steel had been in operation. The manager, Baron Hermelin, informed me, that having in stock some 800 tons of electric steel, the furnace would now be employed for the making of ferro-silicon for which there was considerable demand. He was good enough, however, to put the furnace in operation to show its working, but no measurements of any importance were made, since the same process would be investigated at the inventor's plant at La Praz, France.

LA PRAZ.

Steel at the works of the Société Electro-Metallurgique Francaise at La Praz is made from scrap melted down, purified by the making of a number of slags, and carbonized in the furnace by carburite. This process, unlike that adopted at Gysinge, permits of the purification of the materials employed, and different grades of steel are made without difficulty.

The Furnace.

Description:—

The furnace is of the tilting pattern (see Plate IV and figs. 3, 4, 5, 6 and 7). It consists of an iron casing lined with dolomite brick H H, and magnesite brick around the openings. The hearth is formed of crushed dolomite K, rammed on top of the dolomite brick lining of the bottom of the iron casing. Two electrodes E E pass through the roof of the furnace, which, in the Kortfors furnace, were water jacketed for a short distance above and below their passage through the iron casing of the roof. The current passes from one electrode through the narrow air gap left between the electrodes and the slag line, into and through the slag to the molten metal, along it, through the slag and second air gap, to the other electrode. An alternating current of 4,000 amperes and 110 volts was delivered to the electrodes. The intensity of the current passing through the bath is regulated by adjusting the width of the air gap between the electrodes and the slag line. This adjustment is effected either by hand or automatically by a specially constructed regulator. In the former case (see figs. 3 and 5), the motor P is thrown out of action by lever T. Z, operating on pinion S, which engages the teeth of rod R, is rotated right or left handed to lower or raise the electrodes. Diagram (fig. 8) illustrates the principle of the action of the automatic regulator, and Plate V gives a general view of the pair of regulators employed at La Praz.

In fig. 8, B is an iron wire connecting the bath of metal with the iron casing C of the furnace. The current due to the difference of potential between the metallic bath and the electrode E passes through the voltmetric suction coil S, the movable outer coil of which, operating the rod D pivoted at T, and regulated by spring A, imparts motion to the horizontal staff D′ in a vertical plane, with every variation of difference of potential in the circuit. N, a pulley driven by a small motor, operating by means of the crank M and the connecting rod L, oscillates the part U, which is pivoted at Z. The dogs X X′ attached to U partake of the oscillation of U, but in their backward and forward motion fail to clutch the staff D′ as long as the variation of voltage in the circuit does not exceed 2 volts; when this limit is exceeded either way D′ rises sufficiently high, or is depressed sufficiently low, to be clutched by either X or X′. When this occurs the projection *n* of the respective dog is brought into contact with the respective side of the triangular plate G G, to which the prongs H H, pivoted at Z, are attached by springs K K. This results in bringing the copper piece O, the suspending rod of which is also pivoted at Z, into contact with the respective carbon block Q. From the diagram it will be seen that the direction of the rotation of the motor P, which raises or lowers the electrodes E E, depends upon the contact made by O with either Q or Q′, and hence upon the rise or fall of the voltage in the circuit beyond the limit of 2 volts.

Mr. Héroult states that the cost of the furnace (charge 2,500 kgs.), building and necessary equipment, such as ladles, moulds, crane, &c., is about 50,000 francs, or $10,000. This does not include the turbines and electrical machinery.

Electrodes.

The electrodes are square prisms 360^{mm} on the side and 170^{cm} long. They are made from retort coke which contains from 1% to 2% of sulphur. The binding material is tar.

The coke delivered at La Praz costs 50 francs per metric ton, and the finished electrode 10 centimes per Kg.

The electrodes are not entirely consumed, and the short ends remaining are worked over into new electrodes, at a cost of 2 centimes per Kg.

The plant for making electrodes for one furnace is estimated by Mr. Héroult to cost $5,000.

Electrical Measurements.

A Thompson recording wattmeter had been rented in Paris from La Compagnie pour la Fabrication des Compteurs, and ordered to be sent to La Praz, to be used for the determination of the electric energy absorbed. Unfortunately, however, the meter did not arrive in time to enable us to have it put in circuit. The electric measurements at La Praz were, therefore, made with the instruments (of Hartmann and Braun's manufacture) permanently mounted on the switch board of the power house. The absorption of electric energy per ton of steel amounted to 0.153 electric horse-power years (English units). If tapped before completion of purification, the product to be employed for structural steel, the energy consumed amounted to only 0.1 electric horse-power years per ton. For further electric details, see Mr. Brown's report, pages 53-55, 57 and 58.

Cost of Converting Scrap into Steel.

In a memorandum furnished me by Mr. Harbord, at La Praz, the estimated cost of converting scrap into steel by the Héroult process, exclusive of cost of scrap and metal, amounted to $14.00 per ton of product, For details, see Mr. Harbord's report, pages 73-75.

The following classes of steel are made at the La Praz works and at the selling prices per ton of 2,000 lbs. set opposite the description:—

Steel of exceptional hardness	$363.60
Class 1.—Extra hard steel	272.60
" 2.—Very hard steel	272.60
" 3.—Hard steel	218.00
" 4.—Medium hard steel	218.00
" 5.—Tough, medium hard steel	145.40
" 6.—Tough steel	145.40
" 7.—Tough mild steel	123.20

For results of analyses of the La Praz steels and their qualities, see Mr. Harbord's report, pages 70-72, 75, 76, 79, 81, 87.

Production of Pig.

Mr. Héroult was good enough to make some experiments for us in smelting iron ores. The furnace employed was exceedingly simple, consisting of an iron box of square cross-section, open at top and lined with refractory material. The bottom of the casing was provided with a car bon plate which constituted one terminal of the electric circuit, the other terminal consisted of a carbon electrode of square cross-section about 3 feet in length, and placed vertically in the open top of the furnace. By hand regulation the distance of the electrode within the furnace could be varied.

The charge was placed between the carbon plate at the bottom of the furnace and the vertically-adjustable electrode, and packed around the latter in the space between it and the walls of the furnace.

The ore employed was in a more or less finely divided condition. The gases developed in the zone of fusion and reduction could not, therefore, readily escape, and whenever the pressure of the formed gas exceeded the weight of the charge above it, a blow-out would occur ejecting part of the charge. This, of course, would not occur if the charge consisted, not of fines, which prevent free egress of the gases formed, but of coarse material, with interstitial spaces for the discharge of the gases.

These experiments were made for us by Mr. Héroult for the purpose of demonstrating the simplicity of the process of reducing iron ores by the electric process and it was not intended to demonstrate a figure of cost per ton of pig produced by this process. For further details, see Mr. Harbord's report, pages 89 and 90.

Plate VI represents a view of the interior of the power house of the La Praz works, and Plate VII a general view of the works.

LIST OF CANADIAN PATENTS GRANTED TO THE "SOCIÉTÉ ELECTRO-METALLURGIQUE FRANCAISE," OF FROGES (ISÈRE).

November 11th, 1902—No. 78160.

Improvements to electric furnaces, for the purpose of producing mild metals, and other products, which must be protected from the action of the carbon of the electrodes.

March 17th 1903—No. 79716.

Tilting electric furnace, Héroult process.

November 3rd, 1903—No. 83762.

Process and apparatus to utilize the waste heat resulting from metallurgical operations in general, and more particularly from the manufacture of pig iron.

December 29th, 1903—No. 84615.

Electric furnace with movable electrodes.

September 14th, 1901—(Pending).

Process and apparatus for the electrical manufacture of iron and steel.

APPLICATION FOR A PATENT NOW IN PREPARATION.

Process and apparatus for the electrical manufacture of pig iron, principally with the object of subsequent manufacture into steel.

This application corresponds to French Patent of the 25th of March, 1904.

LIST OF PATENTS OF THE "SOCIÉTÉ ELECTRO-METALLURGIQUE" OF FROGES, (granted to March 15th, 1904).

Case A.—Improvements to electric furnaces, for the purpose of producing mild metals and other products, which must be protected from the action of the carbon of the electrodes.

COUNTRIES.	DATES OF THE PATENTS.	NOS.	REMARKS.
France	27th March, 1900......	298656	In good standing.
Germany	4th July, 1900..... ..	139904	" "
Belgium	13th September, 1900..	152052	" "
"	29th July, 1901........	157894	Patent of addition to preceding patent
Austria	1st January, 1902......	7335	In good standing.
Spain.....	12th January, 1901	26586	" "
"	30th December, 1901...	28292	Patent of addition to preceding patent
England	13th September, 1900..	16293	In good standing.
Hungary	16th September, 1900..	21007	" "
"	25th July, 1901	24576	Patent of addition.
Switzerland.....	20th October, 1900	22947	In good standing.
Norway	21st September, 1900 ..	10074	" "
"	31st July, 1901	10888	Patent of addition to preceding patent
Italy	15th September, 1900..	38-57004	In good standing.
"	2nd August, 1901......	41-60695	Patent of addition to preceding patent
U. S. of America	3rd March, 1903......	721703	In good standing.
Luxemburg	5th April, 1902	4747	" "
Canada...	11th November, 1902 ..	78160	" "
Sweden	15th September, 1900 ..	16872	" "

Case B.—Process and apparatus for the electric manufacture of iron, pig iron and steel of various kinds.

France	12th November, 1900	305373	In good standing.
England	16th July, 1901	14486	“ “
Switzerland	13th August, 1901	24464	“ “
Chili	15th October, 1902	... ..	“ “

Case C.—Process and apparatus to make use of the waste heat, resulting from metallurgical operations in general, and more particularly from the manufacture of pig iron.

France	13th November, 1900	305373	In good standing.
England	17th July, 1901	14576	“ “
Hungary	29th July, 1901	23449	“ “
Belgium	27th July, 1901	157874	“ “
Italy	1st August, 1901	41-60689	“ ‘
Spain	15th November, 1901	22284	“ “
Switzerland	14th August, 1901	24580	“ “
Luxemburg	14th April, 1902	4755	“ “
Norway	9th August, 1901	11678	“ “
Chili	10th December, 1902	......	“ “
Canada	3rd November, 1903	83762	“ “

Case D.—Tilting electric furnace, Héroult process.

France	1st February, 1901	307739	In good standing.
England	18th July, 1901	14643	“ “
Austria	15th December, 1902	11495	“ “
Hungary	28th July, 1901	24242	“ “
Switzerland	29th July, 1901	24347	“ “
Belgium	26th July, 1901	157867	“ “
Norway	29th July, 1901	11061	“ “
Italy	31st July, 1901	41-60655	“ “
Spain	15th November, 1901	28282	“ “
U. S. of America	26th August, 1902	707776	“ “
Canada	17th March, 1903	79716	“ “
Chili	28th November, 1902	......	“ “
Germany	28th July, 1901	148706	“ “

Case E.—Electric furnace with movable electrodes

Belgium	28th September, 1901	158907	In good standing.
“	26th February, 1902	161378	Patent of addition to preceding patent
France	12th February, 1902	318638	In good standing.
England	15th February, 1902	3912	“ “
Hungary	2nd March, 1902	25074	“ “
Italy	23rd February, 1902	42-62791	“ “
Spain	23rd June, 1902	29282	“ “
Norway	28th February, 1902	11311	“ “
Switzerland	24th February, 1902	25426	“ “
Germany	22nd February, 1902	142830	“ “
Sweden	25th February, 1902	17072	“ “
U. S. of America	7th July, 1903	733040	“ “
Canada	29th December, 1903	84615	“ “

Case F.—Process to deoxidize and carburize steel.

Belgium	25th March, 1902	162286	In good standing.
France	25th April, 1902	320682	" "
Luxemburg	18th March, 1903	5987	" "
Hungary	21st March, 1903	28587	" "
Italy	20th March, 1903	170-149	" "
Spain	26th June, 1903	31428	" "
Norway	23rd March, 1903	12585	" "
England	25th March, 1902	6950	Date of priority.
Sweden	24th March, 1903	17200	In good standing.

Case G.—Process to manufacture steel by electro-metallurgical means.

France	7th January, 1903	328350	In good standing.
"	10th July, 1903	....	Patent of addition to preceding patent
Hungary	28th March, 1903	28588	In good standing.
England	26th March, 1903	7027	" "
Luxemburg	13th November, 1903	5331	" "
Italy	22nd November, 1903	181-120	" "

Case H.—Process for the extraction of nickel from garnierite and other ores.

France	30th October, 1903	336376	In good standing.

Case I.—Process to deoxidize and desulphurize steel.

France	2nd November, 1903	336705	In good standing.

Case J.—Process and apparatus to electrically produce pig iron, principally with the object of its subsequent manufacture into steel.

France	25th March, 1904		

NOTE.—The following letter from Dr. Héroult, relating to improvement of his furnace whereby its capacity is nearly doubled, was received since the above was in type.

OTTAWA, 9th September, 1904.

DEAR SIR,—

I have the pleasure of informing you that since your last visit to La Praz the steel furnace you saw there has been materially improved by the addition of water jackets round the electrodes.

The effect is this:—

The output of the crucible has passed from 4 tons to 7 tons in 24 hours.

The absence of air is so complete that we obtain a certain percentage of carbide of calcium in the slag.

The loss of raw material has also greatly diminished.

Yours very truly,

(Signed) P. HÉROULT

DR. EUGENE HAANEL,
Superintendent of Mines
OTTAWA

PLATE IV.

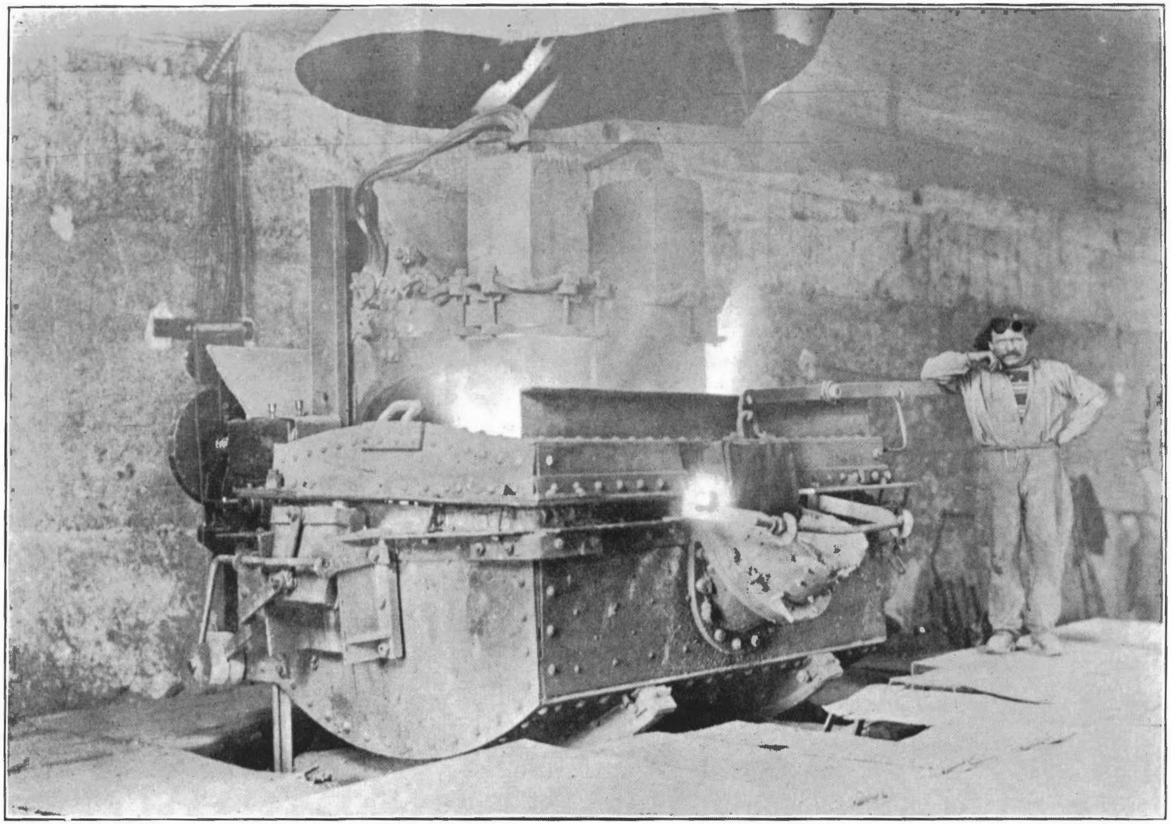

General View of Héroult Furnace.

PLATE V.

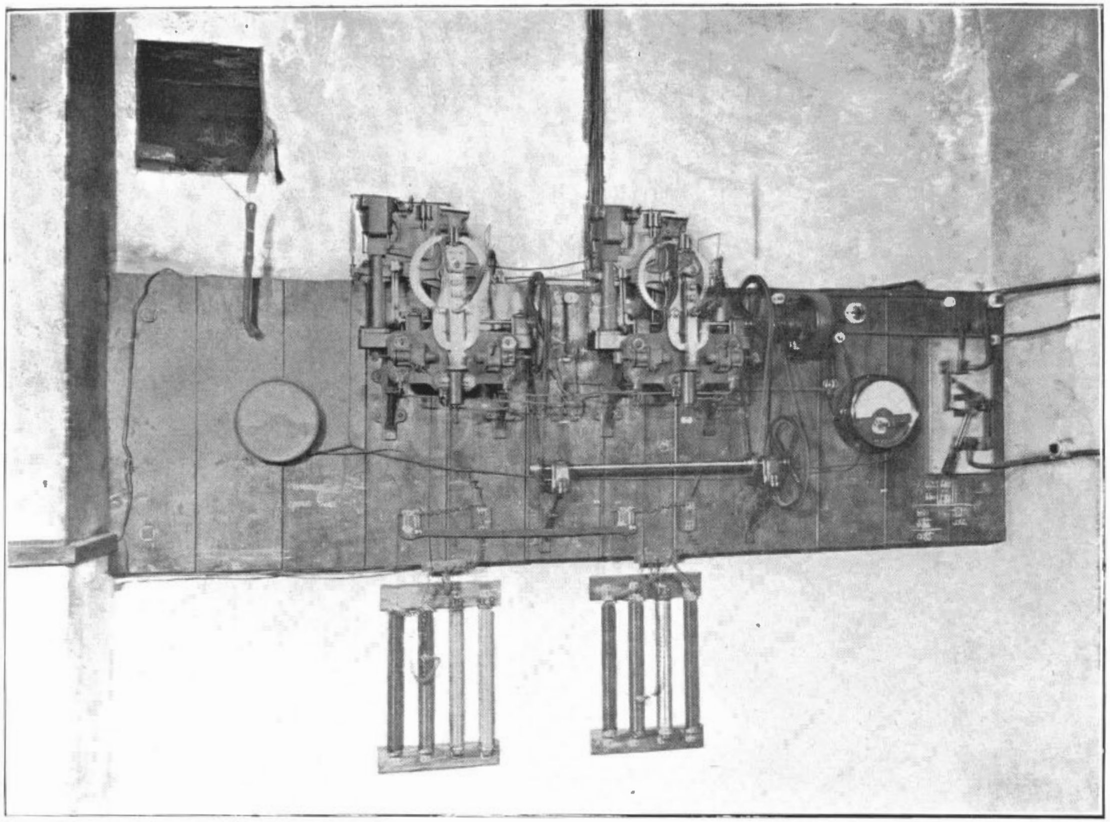

Regulator of the Electrodes, La Praz.

PLATE VI.

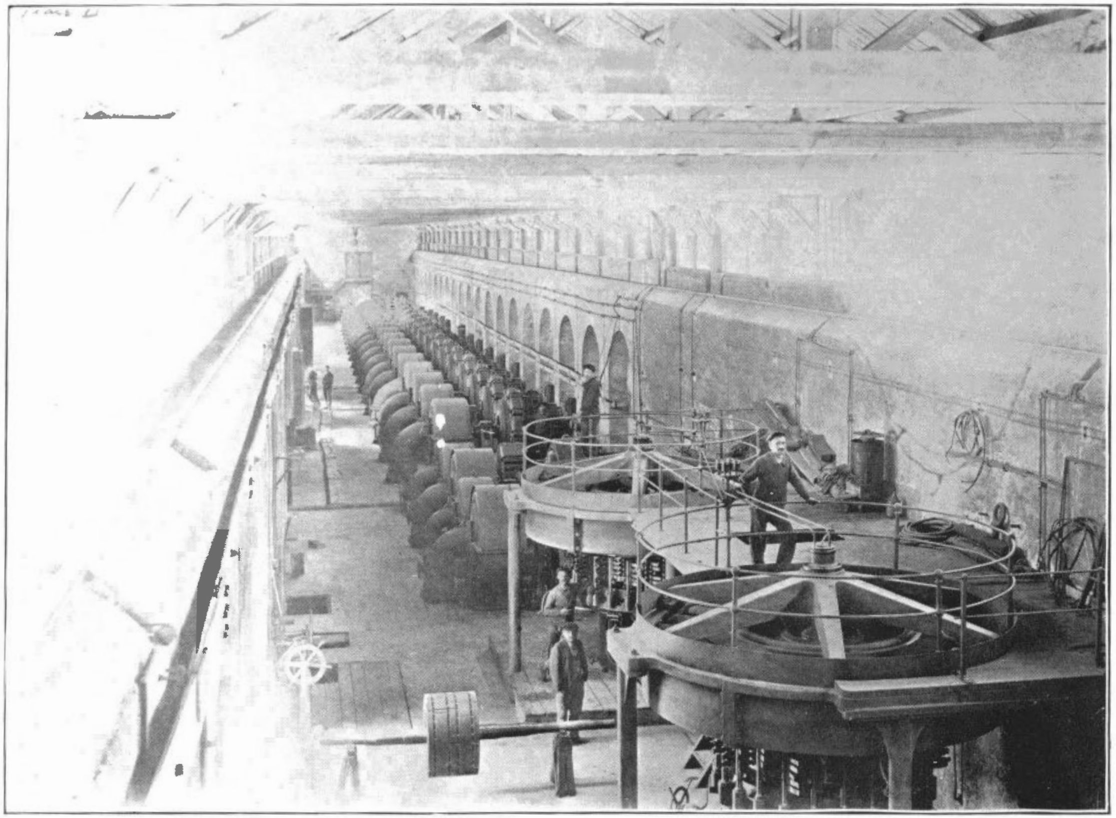

Power House La Praz.

PLATE VII.

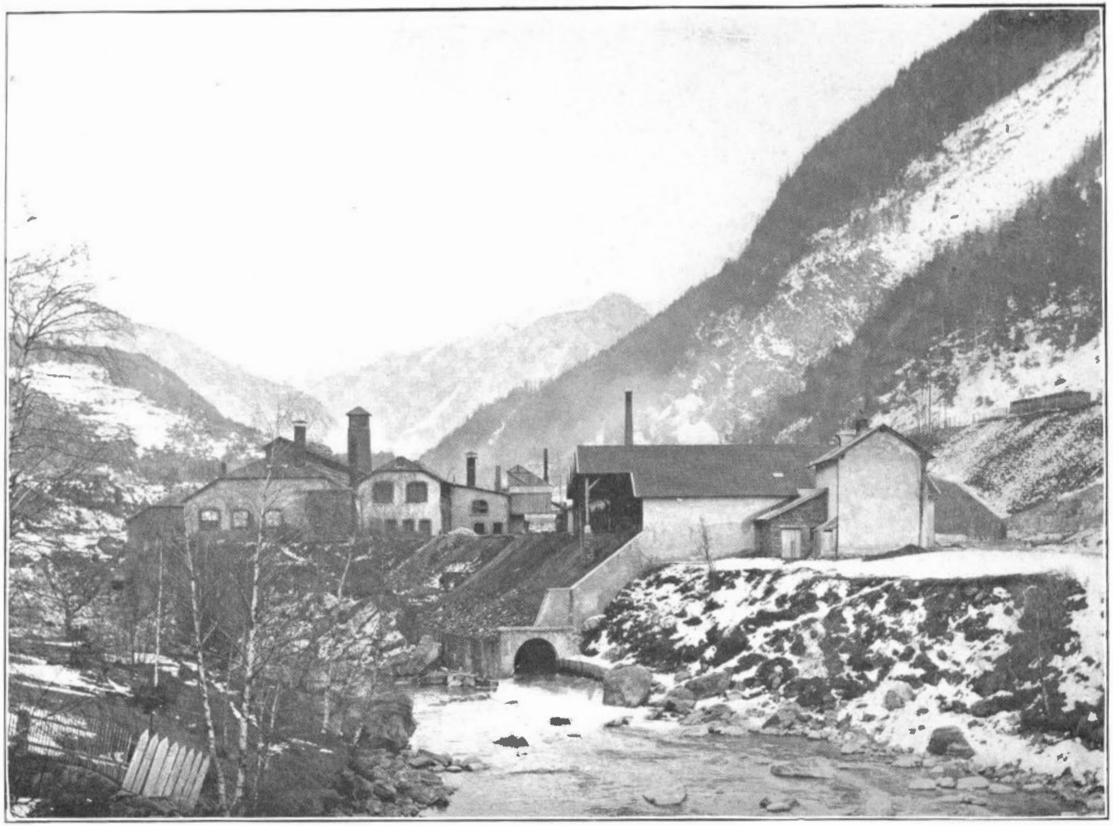

General View of the Plant at La Praz.

HÉROULT STEEL FURNACE
LA PRAZ
FRANCE

Fig. 3

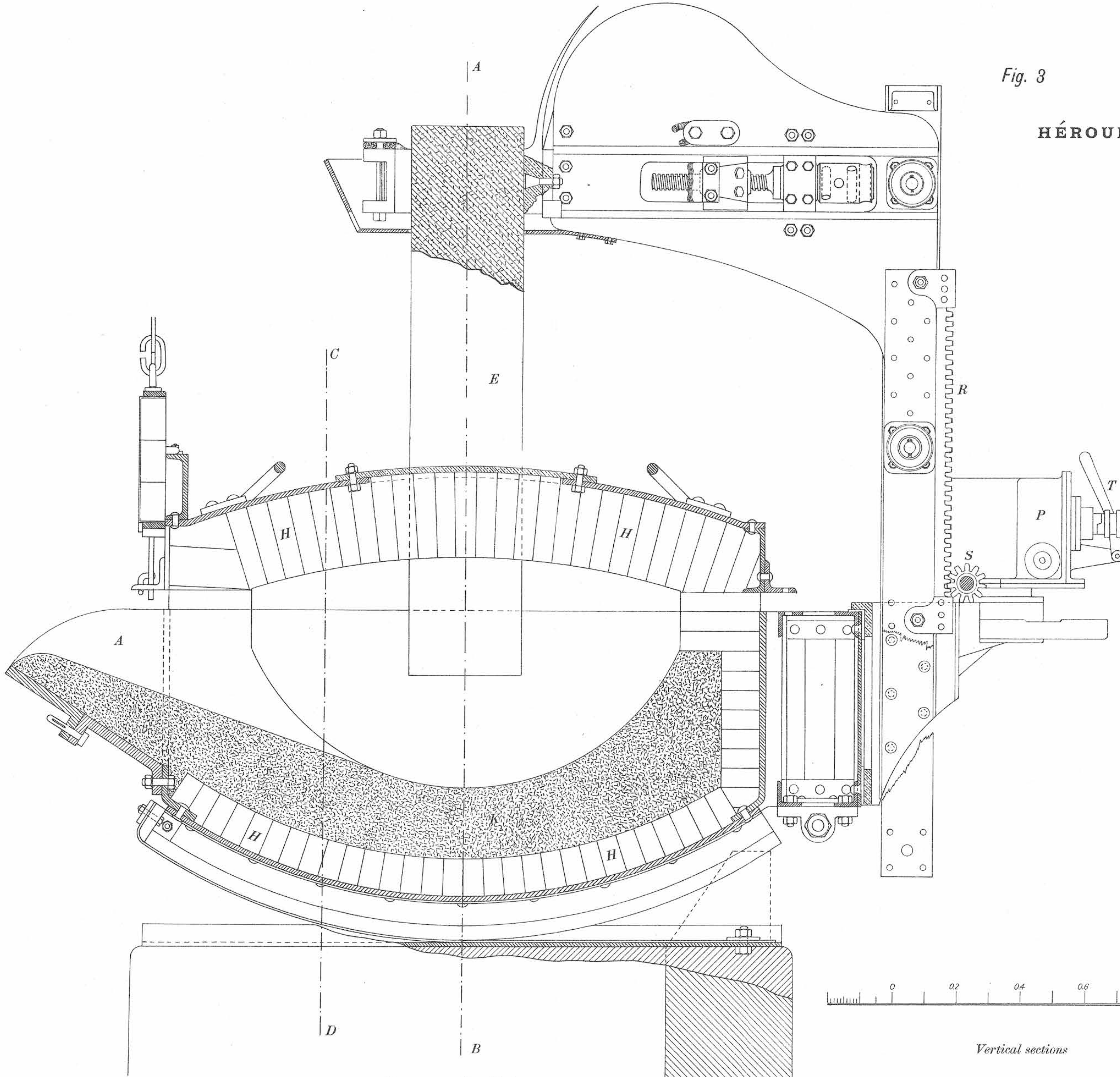

Transvers section E F

0 0.2 0.4 0.6 0.8 1.0 meter

Vertical sections

Fig. 4

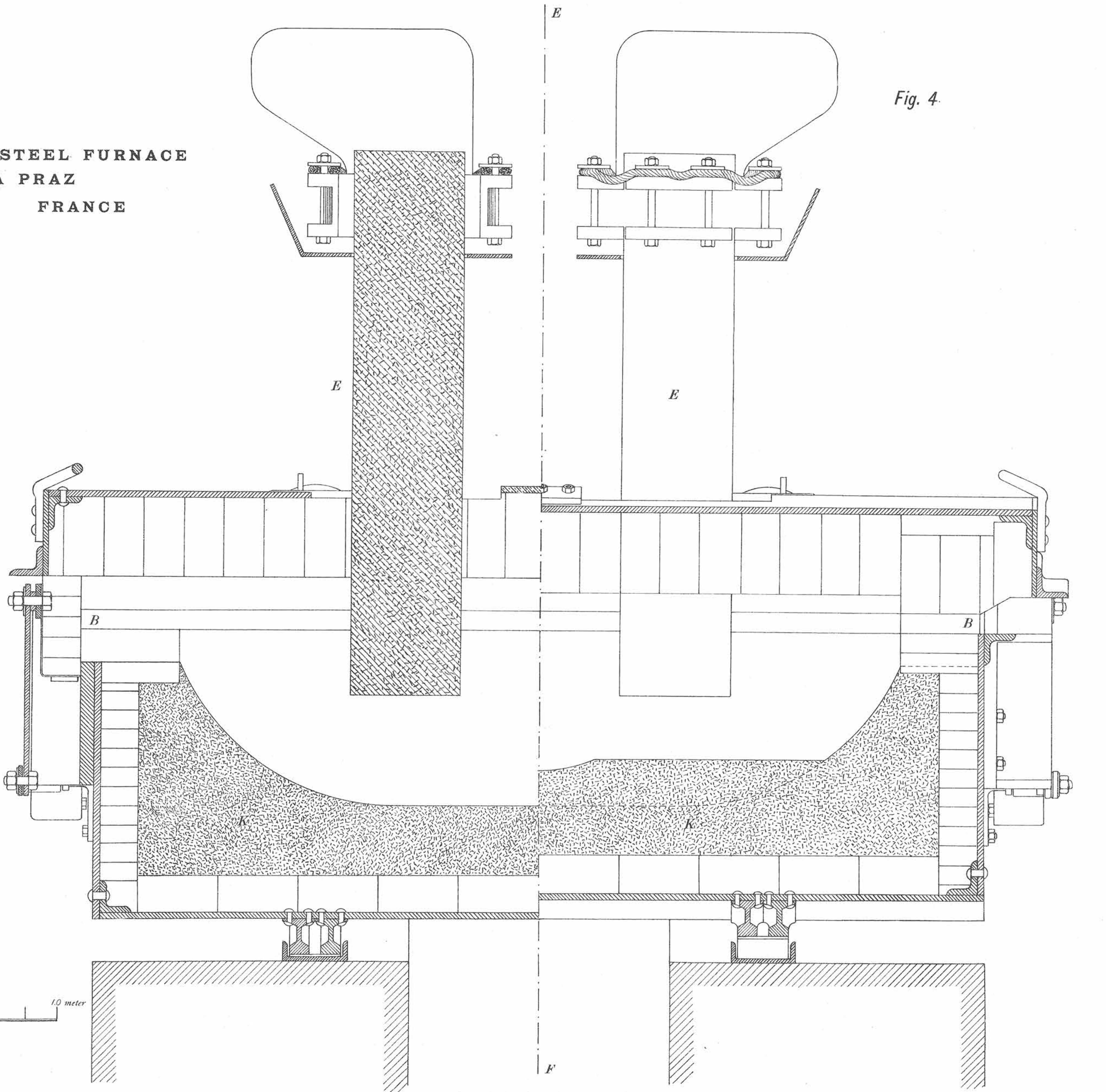

Longitudinal sections AB & CD

HÉROULT STEEL FURNACE
LA PRAZ
FRANCE

Fig. 5

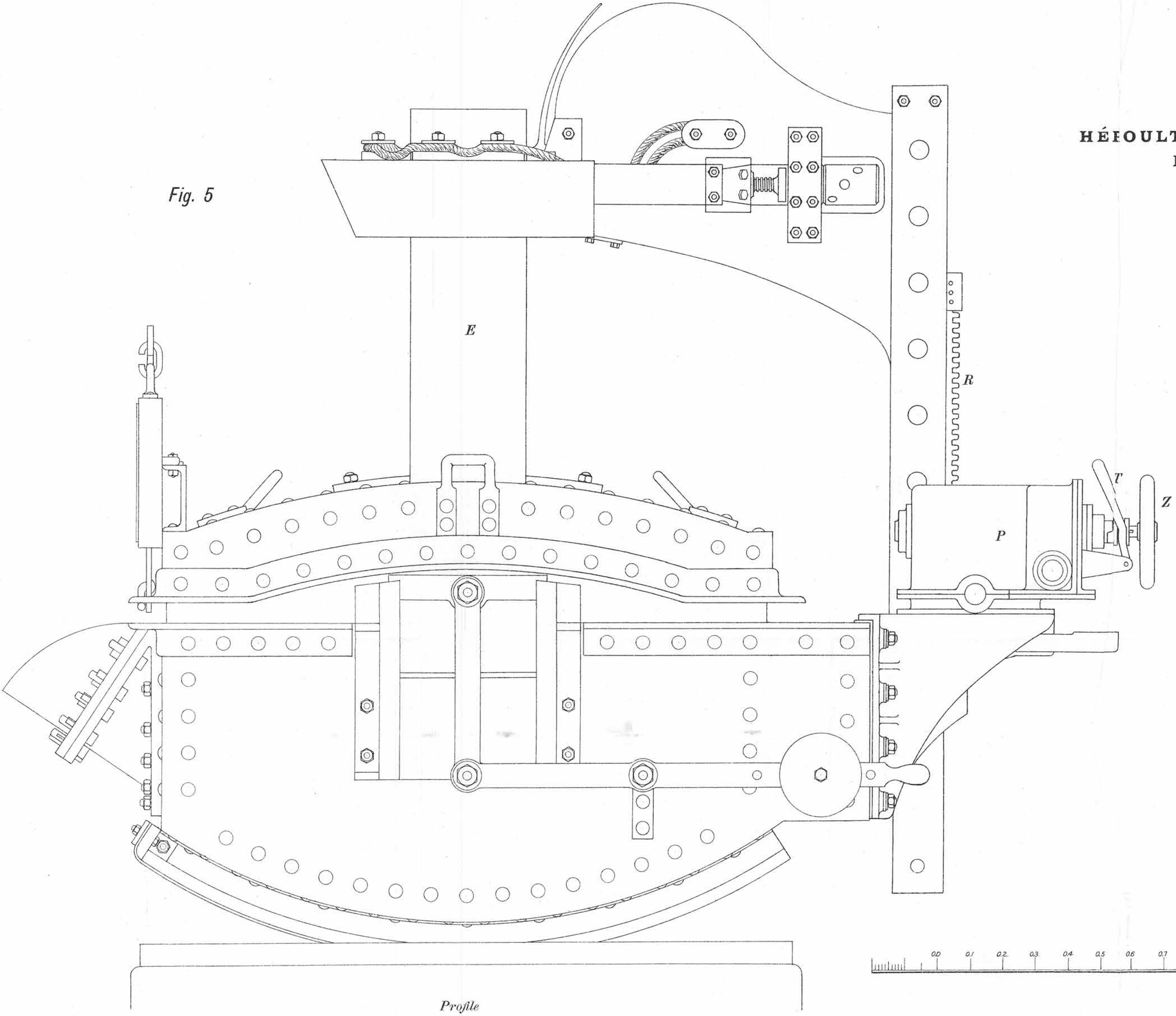

Profile

Fig. 6

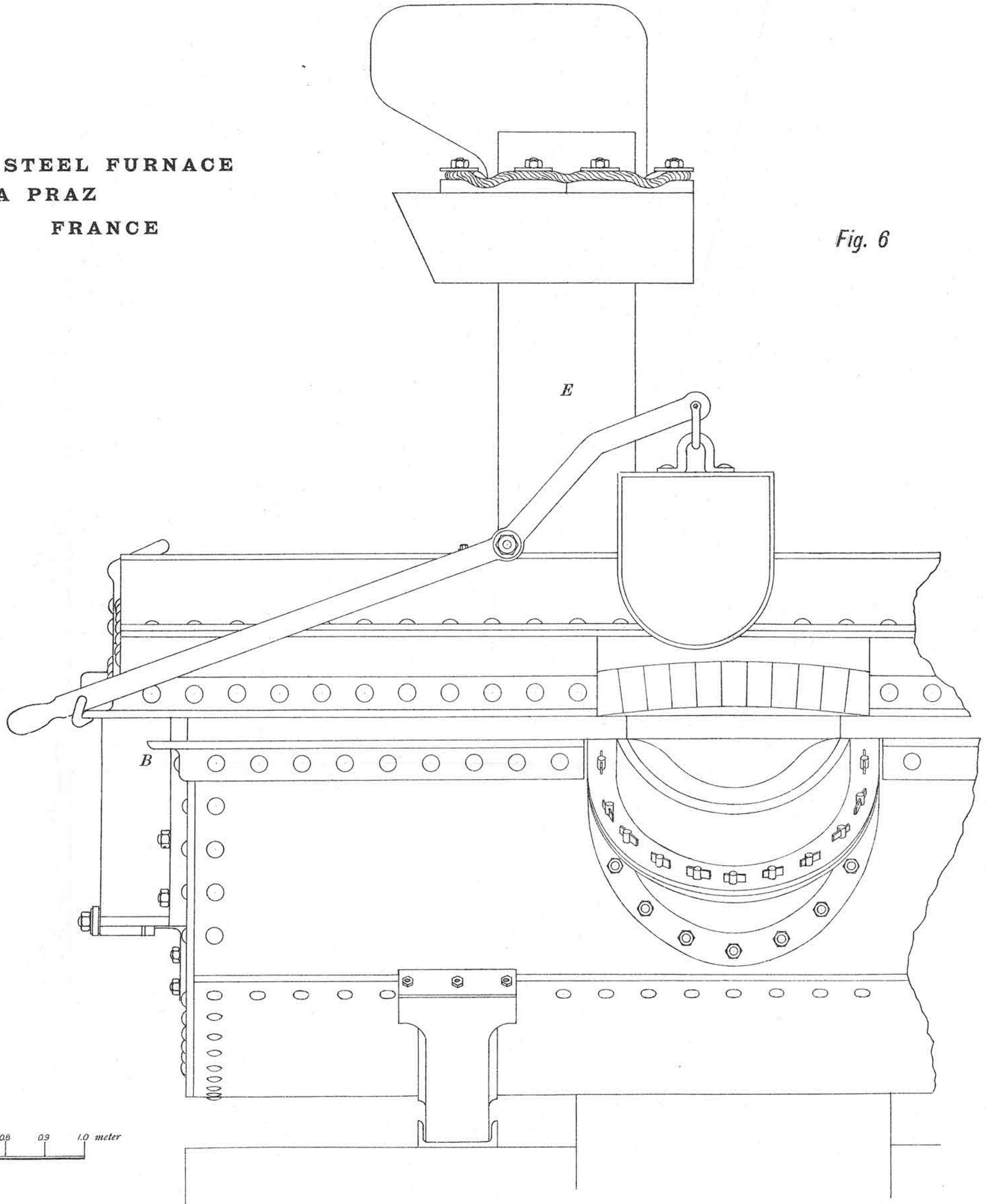

Half elevation

Diagram showing the operation of the regulator
of the electrodes of the Héroults furnace

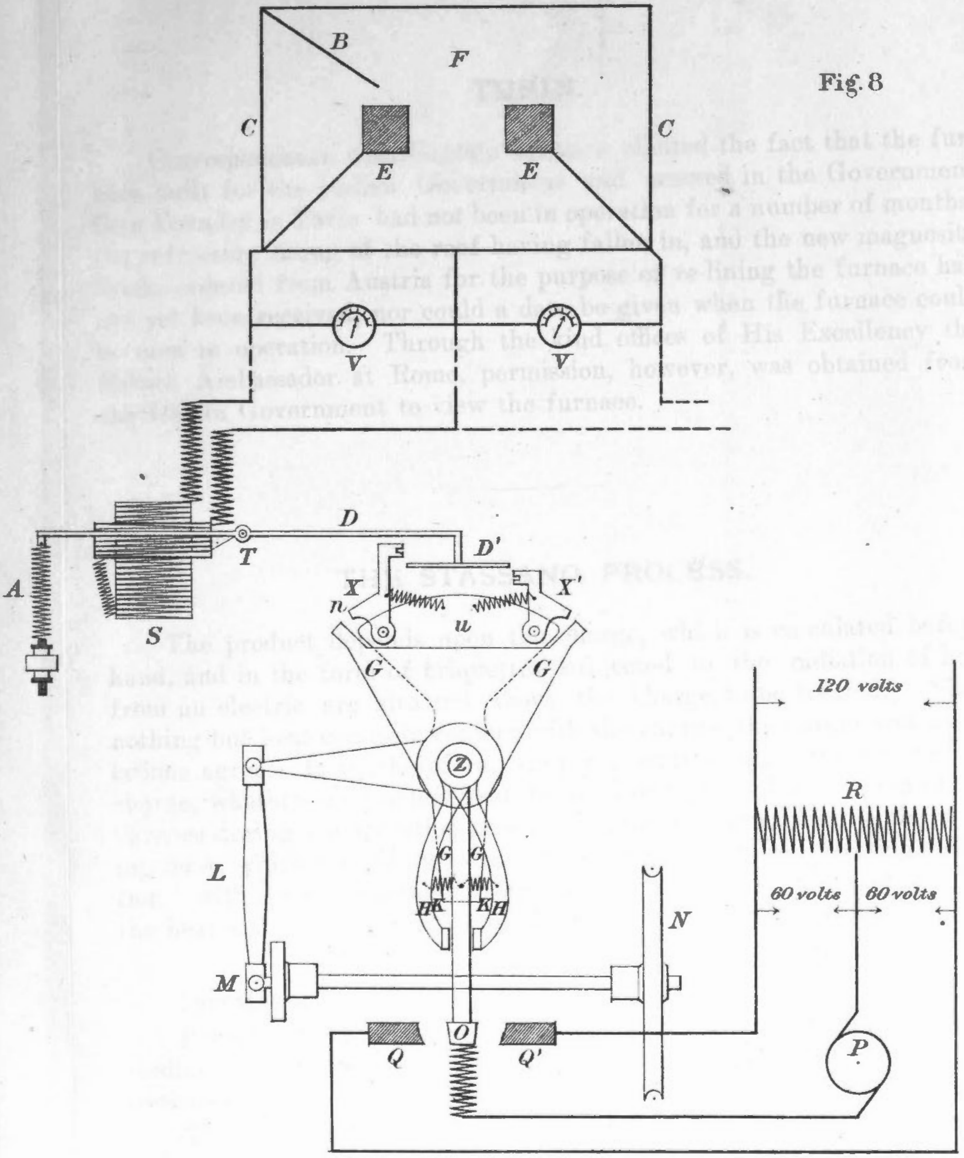
Fig. 8

A	*Regulating Spring*
B	*Connection between bath and casing of furnace*
C	*Casing of furnace*
D'	*Engaging rod*
E	*Electrodes*
F	*Furnace*
L	*Connecting rod with ball sockets*
M	*Crank*
N	*Pulley driven by small motor*
O	*Copper contact*
P	*Reversing motor*
Q	*Carbon contacts*
R	*Resistance*
S	*Suction voltmetric coil*
T	*Pivot*
X	*Dogs*

TURIN.

Correspondence with Captain Stassano elicited the fact that the furnace built for the Italian Government and erected in the Government Gun Foundry in Turin had not been in operation for a number of months, the refractory lining of the roof having fallen in, and the new magnesite bricks ordered from Austria for the purpose of re-lining the furnace had not yet been received, nor could a date be given when the furnace could be seen in operation. Through the kind offices of His Excellency the British Ambassador at Rome, permission, however, was obtained from the Italian Government to view the furnace.

THE STASSANO PROCESS.

The product depends upon the charge, which is calculated beforehand, and in the form of briquettes subjected to the radiation of heat from an electric arc situated above the charge to be treated. Since nothing but heat comes in contact with the charge, the output and calculations agree. It is, therefore, simply a matter of compounding the charge, whether the product shall be steel or iron. The rotation of the furnace during the operation produces a proper intermixture of the melting mass, which, according to the inventor, results in accelerating reduction "with great advantages from the point of view of the utilization of the heat and the preservation of the fire-proof lining of the furnace."

The Furnace.

Description:

Plate VIII is a general view of the latest type of rotating furnace, according to Capt. Stassano. Figs. 9 and 10 are vertical and horizontal sections of the same.

The furnace is of the arc type and consists of a cylindrical outer casing of iron surmounted by a conical roof. The furnace is lined with magnesite brick. The axis of the furnace about which it rotates during the operation includes an angle of 7° with the vertical. A 3-phase alternating current of 90 volts between the phases and 400 amperes is distributed to the three electrodes, which nearly meet in the centre of the interior of the furnace. Their distance apart is varied by a hydraulic regulator. Plate IX is a general view of the switchboard in front of which is seen the valve stand for the operation of the hydraulic cylinders governing the movement of the electrodes. The furnace had been employed in the making of steel from scrap.

By letter dated 23rd June last, Capt. Stassano informed me, that the refractory material having been received for the lining, a new campaign would be begun with the furnace in the first week of July.

The following information relating to a furnace of his pattern, of 1,000 H.P. capacity, was furnished by Capt. Stassano. Cost of furnace, 25,000 francs; output per day, 4 or 5 tons, depending upon quality of ore. Twenty furnaces would be required for an output of 100 tons per day.

A current of 4,900 amperes, at 150 volts, is distributed to four electrodes, supplying 2 arcs with 2,450 amperes for each arc.

The electrodes employed are cylindrical in shape 15^{cm} in diam., and from 1.30 to 1.50 meters in length. 1.50 meters of electrode weigh about 60 kgs. Cost, delivered at Turin, 35 centimes per kg. Consumption, 10 to 15 kgs. per ton of product. The lining is made of formed magnesite brick, requiring two days to replace. Lining will last, under most unfavorable condition, 40 days, but will require now and then slight repairs of the parts immediately in contact with the slag.

Labour required: One man for each furnace, to regulate the arc; one man for charging two furnaces, if plant is provided with machinery for handling charge mechanically, and five men for tapping six furnaces.

The furnaces of the Stassano pattern, which had been in operation at Darfo, Italy, and description of which, with details of experiments, had been given by Dr. Hans Goldschmidt, are no longer in existence, having been destroyed by the private company to which the plant had been sold.

A complete description by Capt. Stassano of his process is given in the appendix entitled, "Electro-thermic Process for the Reduction of Iron Ores," by Ernesto Stassano, Rome 1902.

The following is a list of patents of the Stassano process, furnished me by the inventor:—

LIST OF PATENTS.

ITALY.

NUMBER	DATE OF DEPOSITION	DATE WHEN GRANTED	REMARKS
Vol. 34, No. 47476	March 17, 1898	April 27, 1898	Letters patent for one year.
" 36, No. 50877	" 7, 1899	March 28, 1899	Extension of the above named for 2 years.
" 39, No. 57471	November 2, 1900.	April 26, 1901	1° Completion of the above named letters.
" 39, No. 57472	" 2, 1900.	" 26, 1901	2° Completion of the above named letters.
" 40, No. 59102	March 29, 1901	July 18, 1901	Extension of the above named for 3 years.
" 48, No. 71597	" 31, 1904	May 16, 1904	Extension of the above named for 1 year.

List of Patents—Italy—*Continued.*

Number	Date of Deposition	Date When Granted	Remarks
" 39, No. 58380	January 24th, 1901	May 27, 1901......	Letters patent for 2 years.
" 45, No. 67205	March 30, 1903....	October 21, 1903..	Extension of the above named for 1 year
" 48, No. 71598	" 31, 1904. ..	May 16, 1904......	Extension of the said letters for 1 year.
" 41, No. 60967	September 9, 1901	December 31, 1901	Letters patent for 1 year.
" 43, No. 63202	April 4, 1902......	August 23, 1902 ..	Completion of above named letters.
" 44, No. 65178	September 30, 1902	February 14, 1903	Extension of the above named for 1 year.
" 47, No. 69378	" 29, 1903	" 3, 1904 .	Extension of the above named for 1 year.

AUSTRIA.

No. 7195	May 17th, 1898....	July 9, 1898.......	Letters patent for 15 years.
" 7196	January 28, 1901 ..	February 19, 1902.	1° Completion of the above named letters.
" 8078	" " " ..	May 6, 1902.......	2° Completion of the above named letters.
" ——	March 8, 1902.....	....	Letters patent still under discussion.

HUNGARY

No. 21862	February 8, 1901 ..	July 12, 1901......	Letters patent for 15 years.
" 25864	March 18, 1902....	October 2, 1902 ...	Letters patent for 15 years.

FRANCE

No. 307704	January 31, 1901 ..	May 6, 1901.......	Letters patent for 15 years
" 319404	March 8, 1902.....	July 21, 1902	Letters patent for 15 years.

SPAIN.

No. 22734	June 3, 1898	July 20, 1898.....	Letters patent for 20 years.
" 27183	January 22. 1901 ..	April 6, 1901	Completion of the above named letters.
" 27206	" 24, 1901...	" " "	Completion of the above named letters.
" 29534	March 26, 1902....	May 19, 1902......	Letters patent for 20 years.

LUXEMBOURG.

No. 3444	December 23, 1898	December 23, 1898	Letters patent for 15 years
" 4721	March 7, 1902.....	March 7, 1902.....	Letters patent for 15 years

NORWAY.

Number	Date of Deposition	Date When Granted	Remarks
No. 8675	May 16, 1898	September 10, 1900	Letters patent for 15 years
" 10828	January 19, 1901	June 16, 1902	" " " "
" 11009	" " "	August 4, 1902	" " " "
" 11751	March 18, 1902	April 6, 1903	" " " "
" 12348	October 11, 1902	November 9, 1903.	" " " "

BELGIUM.

No. 139427	December 6, 1898.	December 15, 1898	Letters patent for 20 years.
" 161934	March 8, 1902	March 29, 1902	" " " "

ENGLAND.

No. 11604	May 23, 1898		Letters patent for 14 years.
" 8288	April 9, 1902	October 15, 1902	" " " "

SWITZERLAND.

No. 26029	March 8, 1902	May 31, 1903	Letters patent for 15 years
" 17523	July 11, 1898	" 15, 1899	" " " "

SWEDEN.

No. ——	May 16, 1898		Letters patent still under discussion.
" ——	January 24, 1901		Completion of the above named still under discussion.
" ——	" 26, 1901		Completion of the above named still under discussion.
" 16914	March 8, 1902	December 30, 1903	Letters patent for 15 years.

GERMANY.

No. 141512	May 24, 1898	May 28, 1903	Letters patent for 15 years.
" ——	January 9, 1901		Completion of the above named still under discussion.
" ——	" 14, 1901		Completion of the above named still under discussion.
" 144156	March 10, 1902	September 18, 1903	Letters patent for 15 years.

UNITED STATES OF AMERICA.

No. ——	June 1, 1898		Letters patent still under discussion.
" ——	April 9, 1902		Letters patent still under discussion.

In Russia, United States of America, and Canada, patents have been applied for.

PLATE VIII.

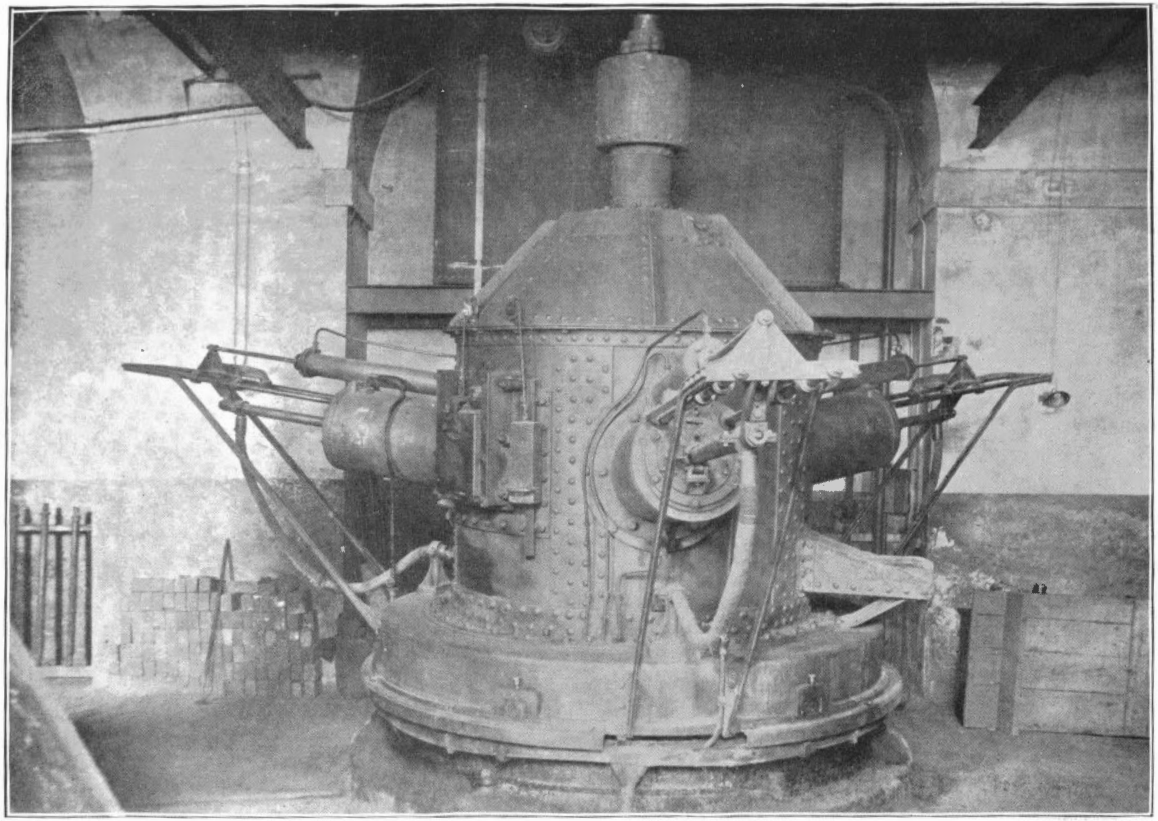

General View of Rotating Electric Furnace of Stassano.

PLATE IX.

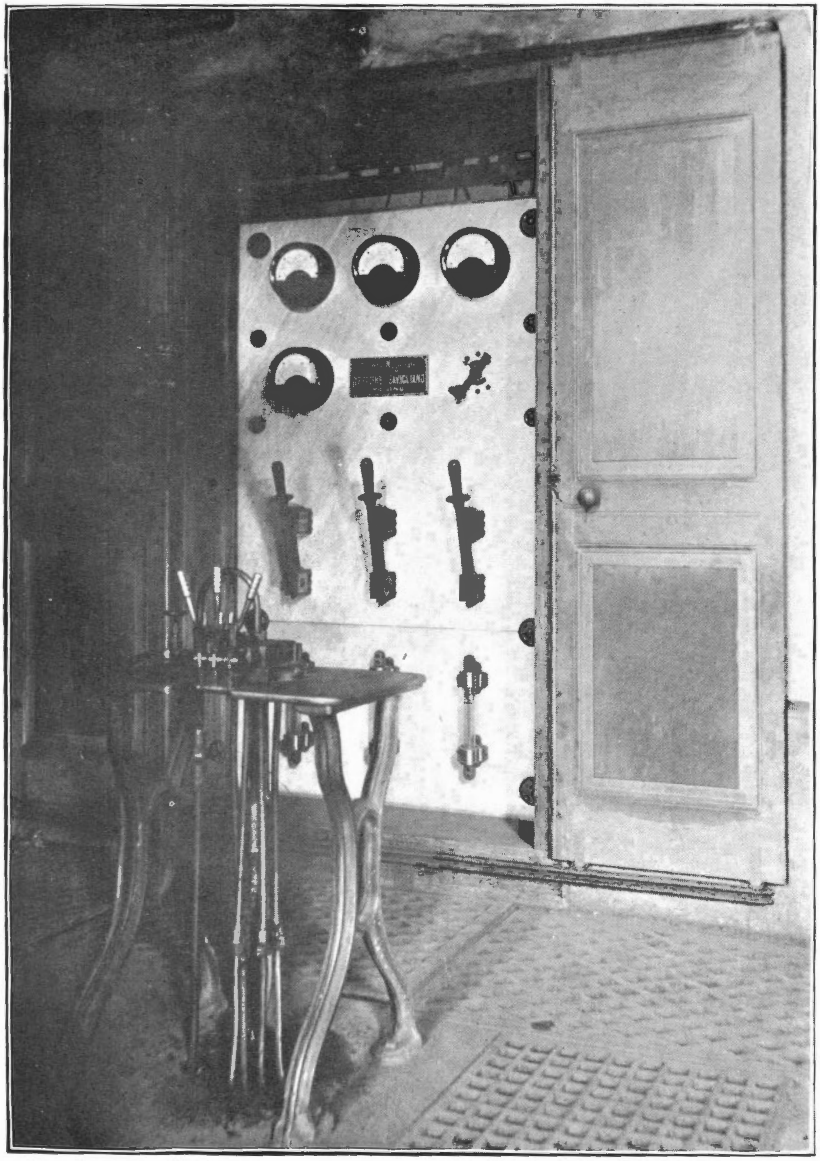

General View of Switchboard and Valve Stand for the Stassano Furnace.

Fig. 9

STASSANO ELECTRIC FURNACE

section AB

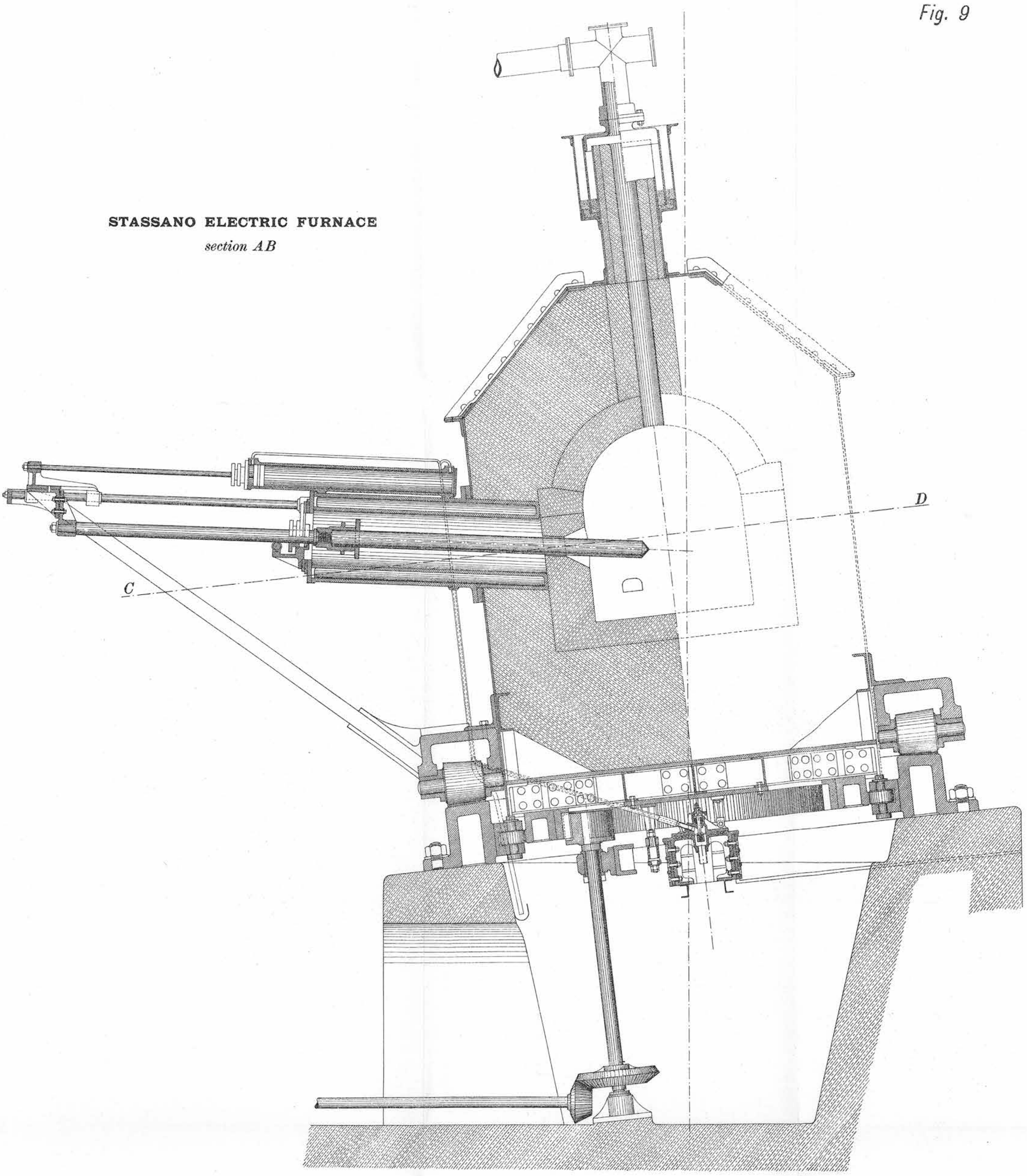

Fig. 10

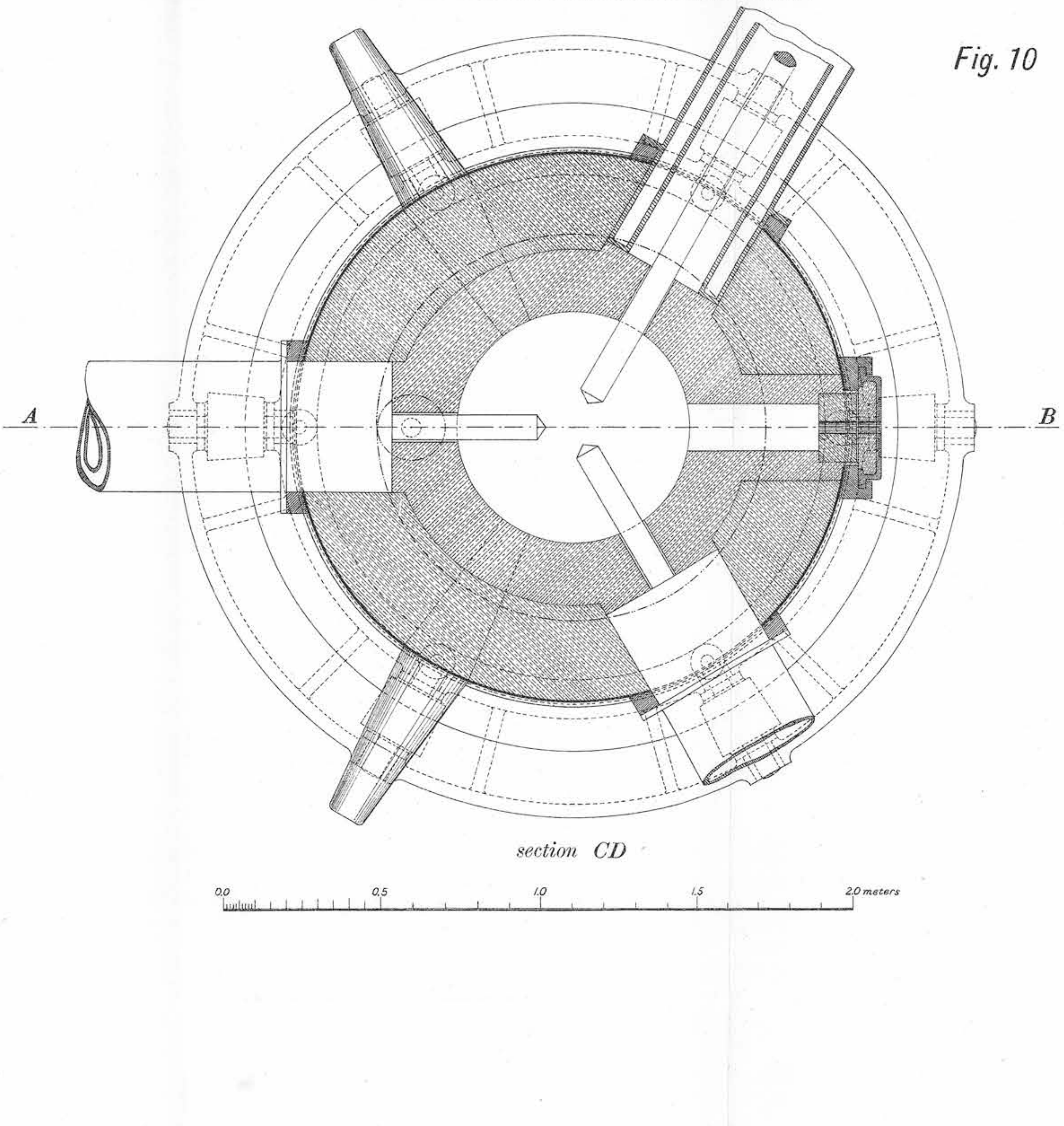

section CD

LIVET, ISERE.—KELLER PROCESS.

By far the most important experiments witnessed by the Commission were those made by Keller, Leleux and Company, at their works in Livet. Some 90 tons of iron ore were used for the various experiments made to demonstrate the commercial feasibility of making pig iron and steel direct from the ore by the electric process.

The furnaces employed for these experiments were the furnaces used in their regular work of making, by the electric process, the various ferros such as ferro-silicon, ferro-chrome, &c. The company, at the time of our visit, was engaged in filling a rush order for ferro-silicon, but generously interrupted their pressing regular work to undertake the making of the experiments for the Commission.

Furnace.

Description:—

The furnace is of the resistance type, and consists, see Plate X, of two iron casings A and B of square cross-section, forming two shafts communicating with each other at their lower ends by means of a lateral canal. The casings are lined with refractory material. Two different classes of furnaces were used for the experiments. In the case of the first furnace employed, the lateral canal was widened out at its centre to form a reservoir for the accumulating melted metal, from which it could be tapped after the slag had been withdrawn from tap-holes, one for each shaft, situated at the lower end of the shaft, at a higher level than the tap-hole of the reservoir.

The base of each shaft is provided with a carbon block. These blocks are in electric communication on the exterior of the furnace by means of copper bars. The carbon electrodes to which the electric current is distributed pass two-thirds of their length into the shaft.

Lining.

Mr. Keller furnishes the following information regarding the lining of the furnace. "The construction of the lining of the Keller furnace is very simple, for it is easy to prove that the source of heat being situated in the central part of the section of the furnace, the walls may be sufficiently distant to be protected by the poor calorific conductibility of the charge which is being operated on.

The charge which descends and is renewed continuously, and the exterior radiation from the walls of the furnace, make it plain that the lining remains intact, even after long periods of operation. It has happened at the Livet factory that badly made or insufficiently dry linings have tumbled into the furnace before it was completely filled by the charge. In relining this damaged part of the metallic wall by means of a properly constituted charge we have always been able to re-form artificially the part of the impaired lining with the materials of the charge itself, to be treated on the way to transformation, and that without stopping the apparatus.

A good method of making the lining is the following:—

A wooden mould of the form of the interior outline, and leaving a space of about 15^{cm} between it and the casing, is introduced, and into this space is rammed a mixture of burnt dolomite and tar. According to circumstances, this lining may be separated from the metallic casing by a double casing of bricks and of sand, with a view of diminishing the radiation of the furnace.

The channel uniting the two shafts is formed and lined in the same manner."

Method of Charging.

In starting the furnace the charge is introduced between the carbon blocks of the base and the ends of the electrodes, which latter are then in their lowest position. The current passes from one electrode through the material to be reduced to the carbon block, from thence outside of the furnace by means of the copper conductor to the other carbon block, through the charge in the second shaft, and to the other electrode. The current meeting in the two shafts with the resistance of the charge, the latter is heated, the reduced metal flowing along the canal conducts the electric current from one electrode internally to the other electrode. The exterior current diminishes as the amount of reduced metal increases. The electrodes are now raised, the charging continues, until finally the electrodes occupy their normal positions, and the shafts below the electrodes, and between the electrodes and the sides of the shafts, are completely occupied by the charge. Under these conditions but a small current flows through the external conductor, the main current passing within the furnace from electrode to electrode. This ingenious arrangement of providing a shunt for the current enables the furnaces to be worked continuously, without at any time varying excessively the load on the alternator.

Electrodes.

The electrodes are formed by an assemblage of four electrodes of square cross-section, 280 millimeter on the side, into a single mass of square cross-section, 850 millimeter on the side, and 1.4 meters long.

The dimensions, measured after 48 hours of working, showed that the decrease of the electrodes in length was very slight. This can be understood when it is considered that the electrodes are but little affected by the passage of a current of relatively low density; the parts of the electrodes not in contact with the charge do not become heated, and the heated ends are completely submerged in a reducing medium.

Two electrodes, which had already been in operation for 48 hours at the beginning of the test, were still in operation 13 days later. On the date of our departure these electrodes were still 1 meter long, their original length having been 1.4 meters.

Mr. Keller contends that the electrodes employed for a furnace of 10 tons output per 24 hours, and comprising two electrodes as above described, will last at least 20 days.

The cost of electrodes per ton of product is estimated by Mr. Keller, from the experiments made for the Commission, to be 3.85 francs.

Experiments.

Three sets of experiments were made for the Commission:—

1st.—Electric reduction of iron ore and obtaining different classes of pig: grey, white and mottled.

2nd.—Electric reduction of iron ore containing a definite amount of carbon in the charge, with a view of ascertaining the amount of electric energy absorbed in the production of one ton of pig iron.

3rd.—The manufacture of ordinary steel of good quality from the pig manufactured in the preceding experiments.

The different classes of pig iron, grey, white and mottled, were obtained without difficulty.

On account of the cooling down of the furnace resulting from the cutting of the circuit for the purpose of putting our wattmeter into position, the metal set in the central crucible, and after a time the furnace began to work irregularly. It was, therefore, decided by Mr. Keller to employ another furnace for the second set of experiments, i.e., for the ascertainment of the absorption of electric energy per ton of pig produced. This furnace differed from the former only in the absence of the central crucible in the lateral connecting canal, and tapping had to be done by means of the tap-holes situated near the base of each shaft. Metal and slag were run together into the molds, and the pig, when cold, was freed from the slag by a few blows of a hammer.

Throughout the experiments the furnaces worked quietly, and without the slightest accident; the gases discharging on top in flickering flames, showing that the gas resulting from the reduction of the ore escaped at low pressure. The workmen were ordinary Italian laborers, without any special training.

The jaws of the crusher to break the ore were set at 2 inches, and the components of the charge were only roughly mixed. For the metallurgical details of the experiment, see Mr. Harbord's report, pages 90-108.

Plate XI is a view of the pig iron produced for the Commission at Livet. In the foreground are seen a number of castings, such as columns, pulleys, gear wheels, plates, &c., made from the metal drawn directly from the furnace. The castings showed sharp edges, comparatively smooth surface, and were sound throughout.

At the close of the experiments for determining the electric energy absorbed per ton of pig, Mr. Keller, at my request, made trials of substituting charcoal for coke as the reducing material in the charge, and although the experiment, in the form it was tried, proved a failure, Mr. Harbord (see his report, page 104) agrees with Mr. Keller, that charcoal could be used provided it were first briquetted with the ore and the briquettes broken up to the size of one inch cubes. Peat bogs abound in Ontario and Quebec, and peat coke, which is much more solid than soft wood charcoal, could doubtless be substituted with good success for the mineral coke which had been used in the experiments described.

Electrical Measurements.

In order to ascertain with accuracy the electric energy absorbed, the Thompson Recording Wattmeter rented from the Paris Company above mentioned was put in circuit. For this purpose it was necessary to cut the heavy copper bars of the circuit and make connecting pieces for the wattmeter. Although this delayed the beginning of the experiments somewhat, and endangered the satisfactory working of the furnace, which had already been put in operation, by the probable setting of the molten metal in the central crucible, as indeed was afterwards found to have occurred, Messrs. Keller and Leleux consented to intercalate our wattmeter. It was soon found that there was a serious discrepancy between the watts delivered as calculated from the company's instruments and as read on our own wattmeter. In fact our wattmeter was claimed to record an input of watts greater than the machine could deliver. It was afterwards found that the wattmeter had been 33% fast when it was recalibrated by the firm from whom it was obtained, under the same conditions under which it had been placed at Livet. When the second furnace was employed it was found to be impossible to introduce the recording wattmeter in the circuit. To obtain reliable data of the absorption of energy, the Director of the Electro-technical Institute of the University of Grenoble was asked to calibrate the voltmeter and ammeter with which the readings were taken, and to determine cos. φ for the alternators Nos. 4 and 2, which had been employed to furnish current for the furnaces. The following is a copy of the certified results, and Plate XII is a view of the apparatus employed for this determination.

UNIVERSITÉ DE GRENOBLE, FACULTÉ DES SCIENCES,
INSTITUT ELECTRO-TECHNIQUE,
GRENOBLE, March 28, 1904.

Tests made on Thursday, March 24th.

Trials Conducted on Machine IV.

Readings of V and I were observed on meters of machine No. IV in the engine room.

Figures in the table given below are direct readings, to be corrected according to the standardizing of the meters.

DIRECT READINGS. V (MEAN).	DIRECT READINGS. I (MEAN).	COS. φ	DIRECT READINGS. W (MEAN).	NO. OF TEST
70.3	9890	0.743	516,583	I
70.1	9900	0.731	507,306	II

Tests made on Sunday, March 27th.

Trials Conducted on Machine No. II.

Readings of V and I were made on meters of machine No. II in the engine room.

Figures in table given below are direct readings. Watts were obtained by :—
V (voltmeter reading) x I (standard ammeter) x cos. φ

VOLTMETER READINGS. METER NO. 130283	AMMETER READINGS. METER NO. 103137	STANDARD AMMETER. I (MEANS)	COS. φ	W (MEANS). W= V. I. STAND'D. (COS. φ)	NO. OF TEST
67.5	6313	8400	0.616	349272	I
67.6	6246	8293	0.530	302121	II
67.3	6184	8260	0.545	302964	III
64.5	4562	6185	0.375	149599	IV
64.6	7775	10125	0.656	428408	V

Standardizing of Thermal Voltmeter, 130285.
March 28th, 1904.

Voltmeter.	Volts.	Voltmeter.	Volts.	Voltmeter.	Volts.	Voltmeter.	Volts.
48	46.15	52	50.10	56	54.21	60	58.07
50	48.16	54	52.28	58	56.15	62	60.14

NOTE.—Temperature of surrounding air during standardizing = 13° cent.

Readings were made on red scale of meter. Index of apparatus was adjusted to zero before standardizing.

Chief Engineer in charge of Tests.

Assistant Director of the Institute.
(Sgd.) BARBILLION.

Mr. Brown (see his report, pp. 44 and 45) remarks that the low figure for the power factors of furnaces Nos. 11 and 12 and Nos. 1 and 2 "is mainly due to the iron casing, which forms a magnetic circuit around each shaft of the furnace, and is highly magnetized by the large current, giving to the circuit a very high reactance. In case of the erection of a new plant, this iron casing would be omitted between the two shafts or entirely. Either change should result in a very great improvement of the power factor, and a corresponding diminution of the kilo-volt-ampere input required, and give very much better conditions of operation for the alternator."

This suggestion has been carried out by Mr. Keller in the latest type of his furnace (see figs. 13 and 14). In these furnaces the casings are omitted, and the brick work held together by bands.

The energy absorbed per ton of pig produced is reported by Mr. Brown to be 0.475 E.H.P. years for the run, with furnace of 1,000 H.P. capacity, with an average current of 11,000 amperes at 60 volts, and 0.226 E.H.P. years for the run with furnace of 308 H.P. capacity, with an average current of 7,000 amperes at 55 volts.

For further electrical details, see Mr. Brown's report, pages 36-45, 55-58.

Cost of Production of Pig by the Keller Process.

Mr. Keller's estimate of cost per ton of product, based on the energy consumed in the second experiment, and found to be 0.226 E.H.P. years, is as follows:—

1.	Ore (Hematite, 55% iron), 1.842 tons, at $1.50 per ton	$2.76
2.	Coke, 0.34 tons, at $7.00 per ton	2.38
3.	Consumption of electrodes $45.00 per ton, 34 lbs. per ton of iron	0.77
4.	Lime, 300 lbs., at $2.00 per ton	0.30
5.	Labor, at $1.50 per day	0.94
6.	Electric energy, 0.226 H.P. years, at $10 per H.P. year	2.26
7.	Miscellaneous materials	0.40
8.	Repairs and maintenance	0.20
9.	General expenses	0.20
10.	Amortization (machinery and buildings)	0.50
	Total, exclusive of Royalty	$10.71

Mr. Harbord has furnished reasons (see his report, page 109) for assuming the mean of the determinations of the two sets of experiments made, i.e., 0.350 E.H.P. years, to be a safer figure on which to base the calculation of cost per ton of pig produced. With this change in the amount of E.H.P., and 100 lbs. additional of lime, the cost per ton of pig is $12.05. For full discussion of costs, see Mr. Harbord's report, pages 108-113.

Production of Steel.

In order to satisfy the Commission and to effect a rapid demonstration of the electrical manufacture of steel, the following experiment was made:—

Soft scrap was melted in the furnace, and the carburizing was effected by means of the pig electrically manufactured on the preceding days. Mr. Keller endeavoured to obtain a steel which could be used for rails containing, say, about 0.50% carbon. Owing to lack of time, the refining was not carried to its completion, and consequently neither was the dephosphorization.

FURNACE WITH A PLURALITY OF HEARTHS.

Mr. Keller furnished the following information regarding his furnace with a plurality of hearths, and the installation of a plant producing 100 tons of pig iron per day. See figs. 11, 12, 13, 14, 15, 16, 17 and 18.

Construction of the Furnace.

"The interior of the furnace comprises several very distinct parts:

1st.—At the lower part, the crucible of the furnace in communication with the central crucible connecting the hearths.

2nd.—The boshes of the furnace in the form of a truncated cone expanding towards the top—which constitutes the zone of liquefaction of the slag, and of decantation of the metal and slag.

3rd.—The body of the furnace, of an elongated and slightly conical shape, widening towards the base.

4th.—A hopper of conical form widened towards the top. The upper part of the hearth, just below its junction with the boshes, constitutes the zone of the furnace where the maximum reducing action takes place.

The gas proceeding from the reduction rises in the body of the furnace so that the charge filling this part, already heated, more by caloric conduction than by radiation, from the intense heat situated at the centre of the furnace, comes in contact with the hot gases, producing a partial reduction of the oxide of iron.

The body of the furnace ought, therefore, to be sufficiently high in order that the gases, traversing an adequate thickness of charge, may pass out from the mouth of the shaft, cooled and without pressure.

In a final type of furnace Mr. Keller will provide the upper part of the furnace with gas collectors, for the purpose of utilizing the escaping gases for the preliminary drying of the charge, by making these gases pass in a state of combustion through the chargers which carry the charge to the charging hopper.

Electrodes.

For the type of furnace proposed for the installation of a plant of 100 tons capacity, the electrodes will be increased to 1.0 meter on the side and an auxiliary electrode will be provided for the central crucible, to be employed to heat the contents of it, in case for any cause there should prove to be danger of the metal setting. See figs. 11, 12, 13 and 14.

To ensure the continuity of the work, the renewing of the electrodes in the Keller furnace is effected in a few minutes by means of a very simple system of two carriages running on perpendicular rails, and each capable of being placed in the axis of the shaft. See figs. 15 and 16.

When the replacing of an electrode becomes necessary, the new electrode (see Plate XIII) all prepared and suspended by its own system of elevation, is hoisted on the charging floor of the furnace and brought near the corresponding shaft; the electrode to be removed is brought out and taken away by means of its rolling system.

The new electrode is immediately put into the place of the old one. During this time, the source of energy does not undergo any variation on account of the method of distribution employed. In fact, the total intensity, half of which passes into each electrode of the same pole in the normal working of the furnace, passes now into the one electrode remaining alone on this pole during the time of the replacing of the second electrode. This increase of intensity during a few minutes cannot derange in any way the working of the apparatus.

The manipulation of the electrodes and the control of the electric action is effected from a single station on a working platform, where the operator has all the measuring apparatus under his eyes.

The operation is so easy that a single man can readily superintend the regulating of a whole battery of furnaces.

The Commission has been able to observe that the measuring apparatus showed very steady current, and presented only very slight and progressive variations, not necessitating any special skill on the part of the person attending to the regulation.

INSTALLATION OF A PLANT PRODUCING 100 TONS OF PIG PER 24 HOURS.

The experiments performed at Livet have shown that to produce 100 tons per day will require 9,750 electric horse-power at the electrodes of the furnace.

To provide for the excitation of the transformation, for the energy consumed by the various motors built for the accessory operations, and for various contingencies, there should be provided an installation of 11,000 E. H. P., which would correspond to an effective hydraulic power of approximately 12,000 H.P., or for the height of the fall of 15^{m} indicated a delivery of about 80 cub. met. per second.

PROJECT.

On these bases the principal lines of the project would be the following:—

Five active furnaces with four hearths each will be provided, each furnace will be capable of absorbing 2,000 horse-power with the normal power corresponding to the force of 9,750 H.P. indicated above, each furnace will absorb:—

$$\frac{9,750}{5} = 1950 \text{ H. P.}$$

say, 1,440 kilowatts. At the pressure of 70 volts per group of two hearths, the intensity corresponding to this power calculated for $\text{Cos.}\,\varphi = 0.75$ should be:

$$\frac{1,440}{70 \times 0.75} = 28,000 \text{ amperes.}$$

Say, 14,000 amperes per hearth.

Note.—The Commission has seen the Livet furnaces working at an intensity reaching 12,000 amperes and has been able to note that the use of such intensities was very common in this works, and did not give rise to any accident.

Machines.

In such a project the practical experience which we have acquired leads us to propose, even if the plant is erected where the hydraulic power is developed, the use of transformers installed with alternators, giving current at a mean pressure of, say, 3,000 volts. The working of alternators at low pressure and very large current gives rise to enormous heating, which produces serious disturbances in an industry which requires before all else an even continuity of operation.

On the other hand, it is of great value in the electro-metallurgic industry to be able to replace a generator by another in case of accident, which is only practically possible with transformers.

At the pressure of 3,000 volts, the primary current of the above groups would have an intensity of about 500 amperes, which would require a line of small section, comparatively inexpensive, permitting the employment of rapidly movable connections to be placed in circuit with any machine whatsoever, on any furnace whatsoever, by means of corresponding transformers.

Finally, in this case we should arrange the transformers in such a manner that they could be rapidly replaced in case of accident by cutting them out individually rather than by breaking up their system of connection with the primary and secondary lines.

Each group would supply two transformers in parallel, the secondary circuit of each transformer would supply, in an independent way respectively, each of two hearths in parallel with the furnace.

The theoretic power of each group should, therefore, be about 2,250 hydraulic effective horse-power.

Turbines of 2,250 horse-power and alternators corresponding to this power and calculated for $\cos.\,\varphi = 0.75$ should be provided. The installation ought to include two groups of spare generators complete, with their transformers.

Note.—It would be useful to make a new determination of cos. φ corresponding to the construction of the furnace, with all the appropriate accessories.

Five furnaces would suffice to insure the intended production. These furnaces would be of four hearths, the hearths being in parallel of twos, the groups of two in series being connected across a central crucible.

Two furnaces, with complete spare generators, should be provided.

The seven furnaces would be arranged in a line as near as possible to the wall separating them from the machine room; the transformers should be placed very near the other side of the wall, in such a manner that the secondary lines may be as short as possible. The metal would be run into a movable reservoir installed on rails, and run in front of the furnaces by means of an electric trolley system.

The single tappings of the furnaces, of which we have just spoken, amount to about 2,000 Kgs., say 10,000 Kgs., for the entire battery of furnaces.

The transformation of the pig into steel could, therefore, be made per 10 tons at a time, in a room adjoining the furnace room, either by means of a converter, or by means of some other appropriate system.

The slag would be tapped on the opposite side of the furnaces, and run by trucks directly outside.

The manipulation of the electrodes would be effected at a station placed behind the wall facing the front of the furnaces, in such a manner as to protect the operator from the heat of the tappings.

If found more expedient, the manipulation of all the electrodes of the five furnaces could be concentrated at a single station.

Manufacture of Electrodes.

In supposing that an electrode will last 20 days, it is found that 20 electrodes are needed in 20 days, say 1 electrode per day.

For this it is intended to have three furnaces to bake the electrodes, and the corresponding accessory apparatus (see fig. 17).

Raw Material.

The handling of the raw material necessitates a very careful study in order to diminish the manual labour as far as possible.

It is necessary to consider that the plant projected will require the handling of about 250 tons of material per day.

We think that the general scheme ought to be carried out on the following lines.

The raw material should be brought to the plant in wagons circulating on a platform, permitting of their being dumped into bins.

At the lower part of these bins, inclined channels would feed the jaw-crushers directly by means of automatic distributors.

The crushed material would be raised to the weighers-in, who would return it mixed in the desired proportions to a bucket elevator, supplying the floor of distribution with the material for the charges of the furnaces. The distribution would be effected either by conveyors or by wagonettes.

The charge would be sent down into the shafts of the furnaces by the feeding column, which utilizes the heat of the gas leaving the furnaces.

Note.—The process employed at the Livet works permits the use of materials coarsely broken and mixed in a very rough way, which is a great advantage, owing to the facility with which it can be done, and to the economy of the preparation and the handling of the charge."

LIST OF PATENTS OF THE CIE ÉLECTRO-THERMIQUE KELLER ET LELEUX APRIL 1st, 1904.

France.

DESIGNATION OF PATENT.	NO. OF PATENT.	DATE OF REGISTRATION.	Registration No.	Registered Subject to Agreements of Industrial Convention. — DATE ON WHICH PATENT COMES IN FORCE.
Furnace with two hearths	300,500	21 May, 1900		
Furnace with two electrodes	300,630	23 May, 1900	....	11 October, 1899
High furnace and process for the manufacture of alloys	312,470	6 July, 1901		
Process for manufacture of alloys	312,471	6 July, 1901		
Furnace without electrodes	314,858	9 November, 1901		
Process of fusion and refinery	322,700	2 July, 1902		
Improvements to process of fusion and refinery	329,013	2 February, 1903		
Triple alloy of iron, silicon and manganese	334,504	8 August, 1903		
Improvements to electric furnaces	336,403	2 November, 1903		
Furnaces with multiple chambers (hearths)	....	13 February, 1904	6361	

Germany.

Designation of Patent.	No. of Patent	Date of Registration	Registration No.	Registered Subject to Agreements of Industrial Convention. Date on Which Patent Comes in Force.
Furnace with two electrodes	129,282	16 December, 1899.		
Furnace with two hearths	122,271	28 June, 1900		
Electric high furnace	147,582	30 July, 1901		
Furnace without electrodes	140,838	31 January, 1902		
Improvements to process of fusion and refinery		6 February, 1903	24680	
Improvements to electric furnaces		2 November, 1903		
Furnaces with multiple chambers (hearths)		20 February, 1904		

England.

Furnace with two hearths	22,584	11 December, 1900		21 May, 1900
High furnace and process for the manufacture of alloys	24,234	28 November, 1901		6 July, 1901
Process of fusion and refinery	15,271	8 July, 1902.		
Process for manufacture of alloys	24,235	28 November, 1901		6 July, 1901
Furnaces with multiple chambers (hearths)		15 February, 1904	3790	

Canada.

Furnace with two hearths	74,882	25 February, 1902.		
Improvement of the process of fusion and refining		12 June, 1903		
Furnaces with multiple chambers (hearths)		27 February, 1904	110,429	

United States of America.

Furnace with two hearths	688,861	3 December, 1900		21 May, 1900
Electric High furnace	754,656	17 January, 1902		6 July, 1901
Process of fusion and refinery		12 August, 1902	119,385	
Furnaces with multiple chambers (hearths)		26 February, 1904	195,324	

Belgium.

DESIGNATION OF PATENT.	NO. OF PATENT.	DATE OF REGISTRATION.	Registration No.	Registered Subject to Agreements of Industrial Convention. DATE ON WHICH PATENT COMES IN FORCE.
Furnace with two electrodes	146,653	11 December, 1899		
Furnace with two hearths	153,219	19 November, 1900	....	21 May, 1900
Electric High furnace	160,605	30 December, 1901	....	6 July, 1901
Process for manufacture of alloys	160,825	10 January, 1902	....	6 July, 1901
Furnaces with multiple chambers (hearths)	....	15 February, 1904	140,312	

Spain.

Furnace with two electrodes	26,081	29 May, 1900	....	11 December, 1899
Furnace with two hearths	26,869	20 November, 1900	....	21 May, 1900
Electric High furnace	29,077	4 January, 1902	....	6 July, 1901
Process for manufacture of alloys	29,122	13 January, 1902	....	6 July, 1901
Process of fusion and refinery (electric)	30,934	31 December, 1902	....	2 July, 1902
Furnaces with multiple chambers (hearths)	....	19 February, 1904	2330	

Italy.

Furnace with two electrodes	54,312	22 January, 1900		
Furnace with two hearths	57,631	19 November, 1900	....	21 May, 1900
Electric High furnace	62,229	9 January, 1902	....	6 July, 1901
Process for manufacture of alloys	62,307	13 January, 1902	....	6 July, 1901
Process of fusion and refinery (electric)	66,163	30 December, 1902	....	2 July, 1902
Triple alloy of iron, silicon and manganese and process of its manufacture in electric furnace	70,808	29 January, 1904	....	8 August, 1903
Furnaces with multiple chambers (hearths)	....	20 February, 1904		

Austria.

DESIGNATION OF PATENT.	NO. OF PATENT.	DATE OF REGISTRATION.	Registration No.	Registered Subject to Agreements of Industrial Convention. — DATE ON WHICH PATENT COMES IN FORCE.
Furnace with two electrodes	3,175	15 December, 1899		
Furnace with two hearths	7,338	20 November, 1900		
Electric High furnace	11,903	23 October, 1901		
Process for manufacture of alloys	12,084	23 October, 1901		
Process of fusion and refinery (electric)		2 August, 1902		
Furnaces with multiple chambers (hearths)		18 February, 1904.		

Sweden.

Furnace with two hearths	12,935	26 November, 1900		21 May, 1900
Electric High furnace		4 January, 1902	12	6 July, 1901
Process of fusion and refinery (electric)		31 December, 1902	2306	2 July, 1902
Furnaces with multiple chambers (hearths)		26 February, 1904.	321	

Hungary.

Furnace with two hearths	21,540	27 November, 1900		21 May, 1900
Furnaces with multiple chambers (hearths)		23 February, 1904 .	2308	

Chili.

Furnace with two hearths		20 March, 1901		
Electric high furnace		25 September, 1903		

Belgian Congo.

Electric high furnace	90	18 January, 1902		6 July, 1901

Brazil.

Electric high furnace	3,706	31 October, 1902		
Process of fusion and refinery (electric)	3,705	31 October, 1902		

Switzerland.

DESIGNATION OF PATENT.	NO. OF PATENT.	DATE OF REGISTRATION.	Registration No.	Registered Subject to Agreements of Industrial Convention. — DATE ON WHICH PATENT COMES IN FORCE.
Furnace with two hearths	22,858	19 November, 1900	....	21 May, 1900
Electric high furnace	25,528	4 January, 1902	....	6 July, 1901
Process of fusion and refinery	27,842	29 December, 1902	....	2 July, 1902
Furnaces with multiple chambers (hearths)	....	15 February, 1904	34469	

New Zealand.

Furnace with two electrodes	13,300	7 January, 1901		
Furnace with two hearths	13,336	21 May, 1900		
Electric high furnace	14,729	10 April, 1902		

Russia.

Furnace with two hearths	7,019	23 November, 1900	....	21 May, 1900
Process of fusion and refinery (electric)	....	1-14 August, 1902	18,120	
Furnaces with multiple chambers (hearths)	....	9-22 February, 1904		

Norway.

Furnace with two hearths	10,468	26 November, 1900	....	21 May, 1900
Electric high furnace	11,948	4 January, 1902	....	6 July, 1901
Process of fusion and refinery (electric)	....	2 January, 1903	15,906	2 July, 1902
Furnaces with multiple chambers (hearths)	....	20 February, 1904	17,379	

PLATE X.

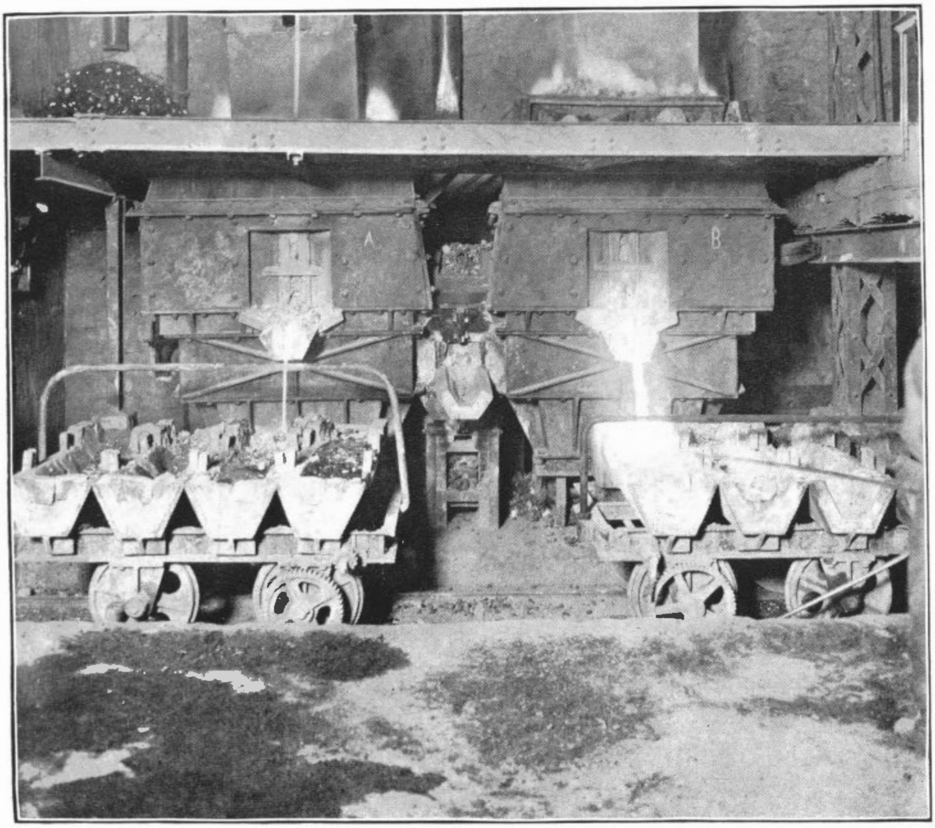

General View of Keller Furnace.

PLATE XI.

View of the Pig Iron and Castings produced for the Commission at Livet.

PLATE XII.

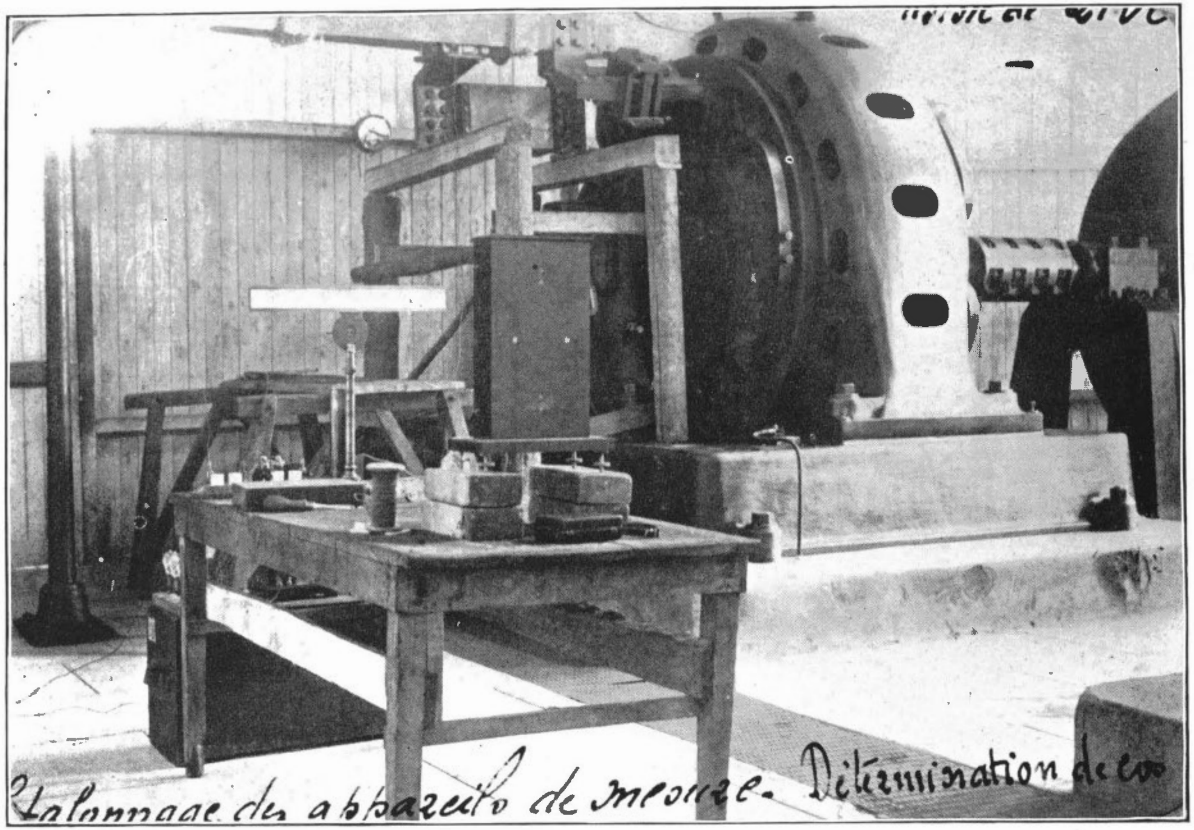

View of the apparatus employed in determining cos. φ of Alternators 4 and 2 at the works of Keller, Leleux and Co., Livet.

PLATE XIII.

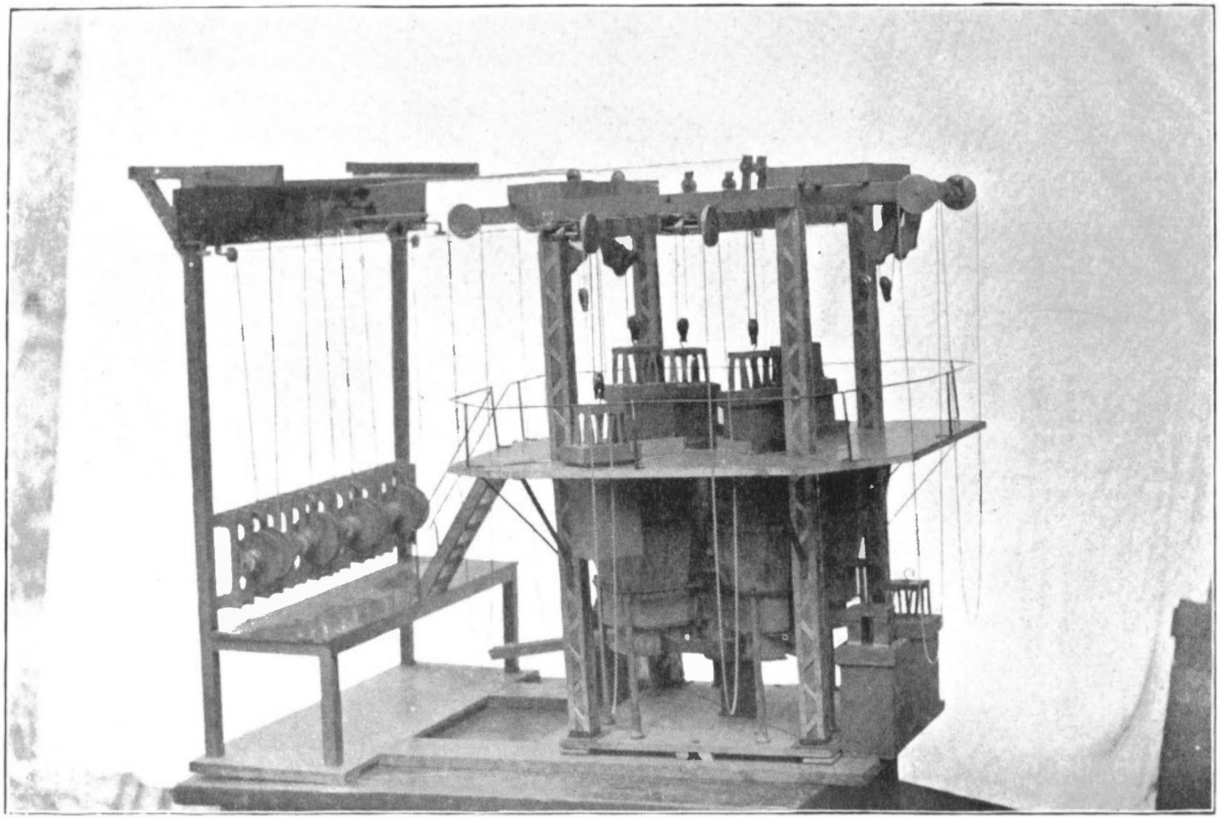

View of Model to show Method of Replacing Electrodes in Furnace with 4 Hearths. Keller.

The Keller Electric High Furnace with a plurality of Hearths

Fig. 11

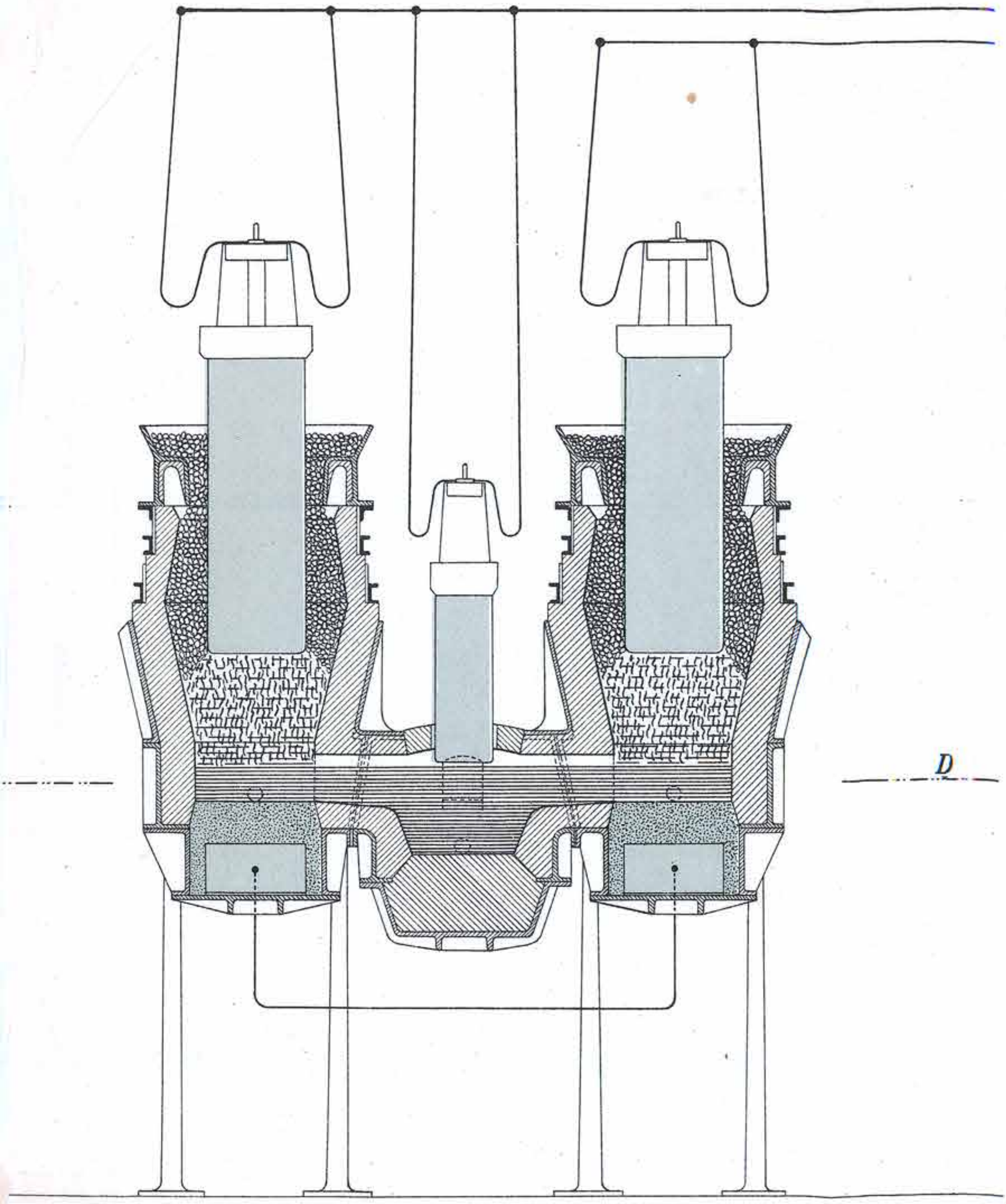

Fig. 12

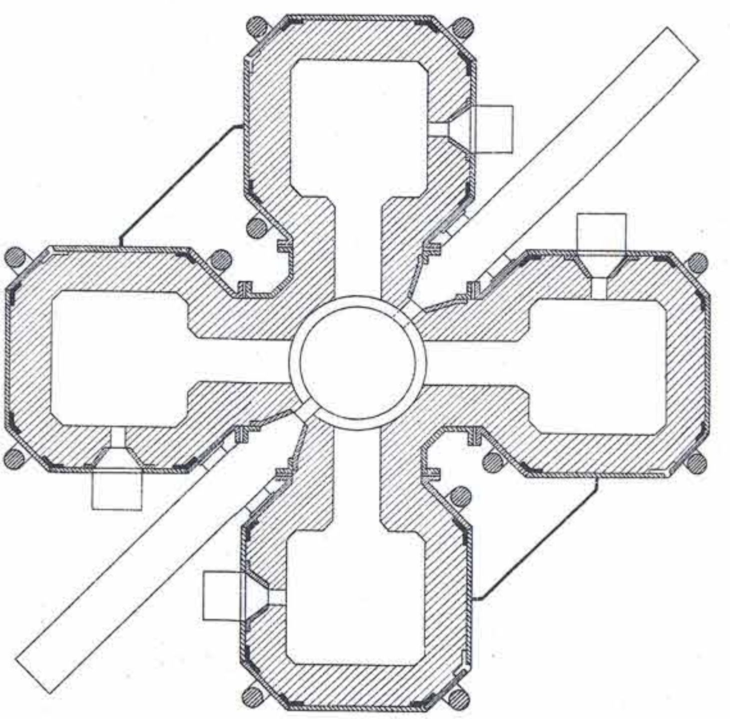

section CD

0 1 2 3 *meters*

Latest form of the Keller Electric High Furnace with a plurality of Hearths

Fig. 13

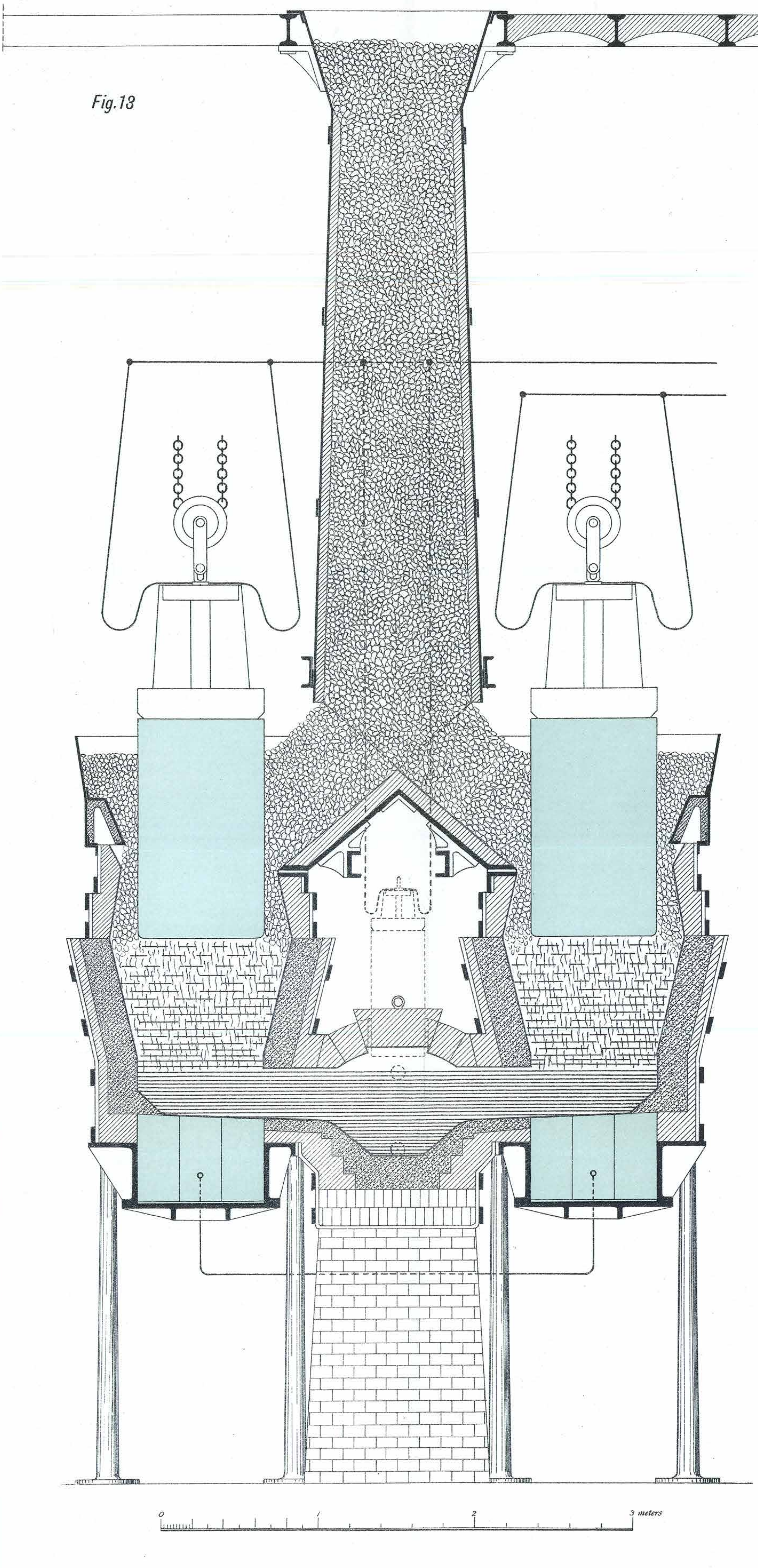

Fig. 14

Installation of the Keller Electric High Furnace with a plurality of Hearths

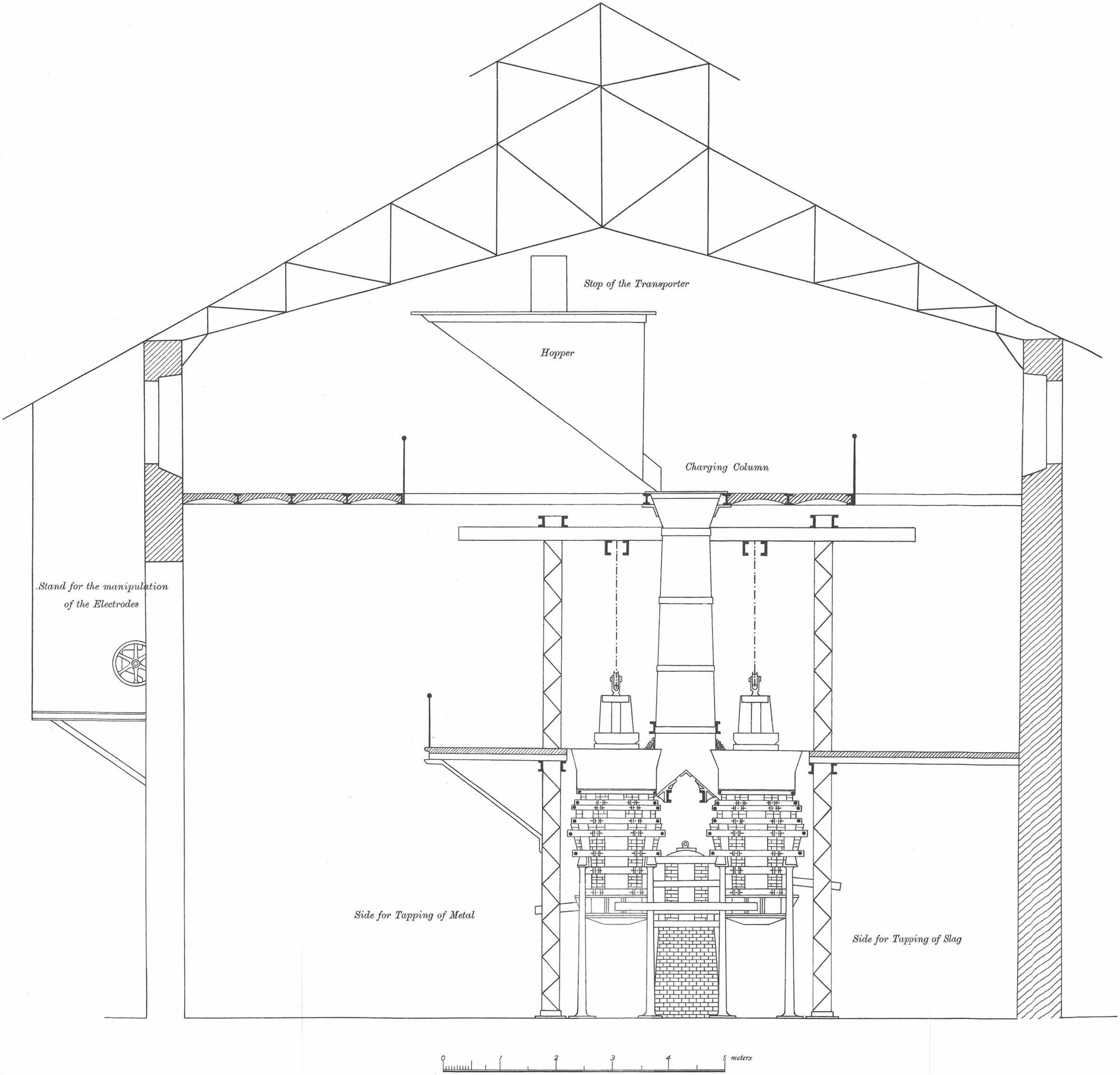

Preliminary Plan of the Installation of an Electric Furnace with 4 Hearths according to Keller Producing 20 Tons of Pig Iron in 24 hours.

Fig. 15

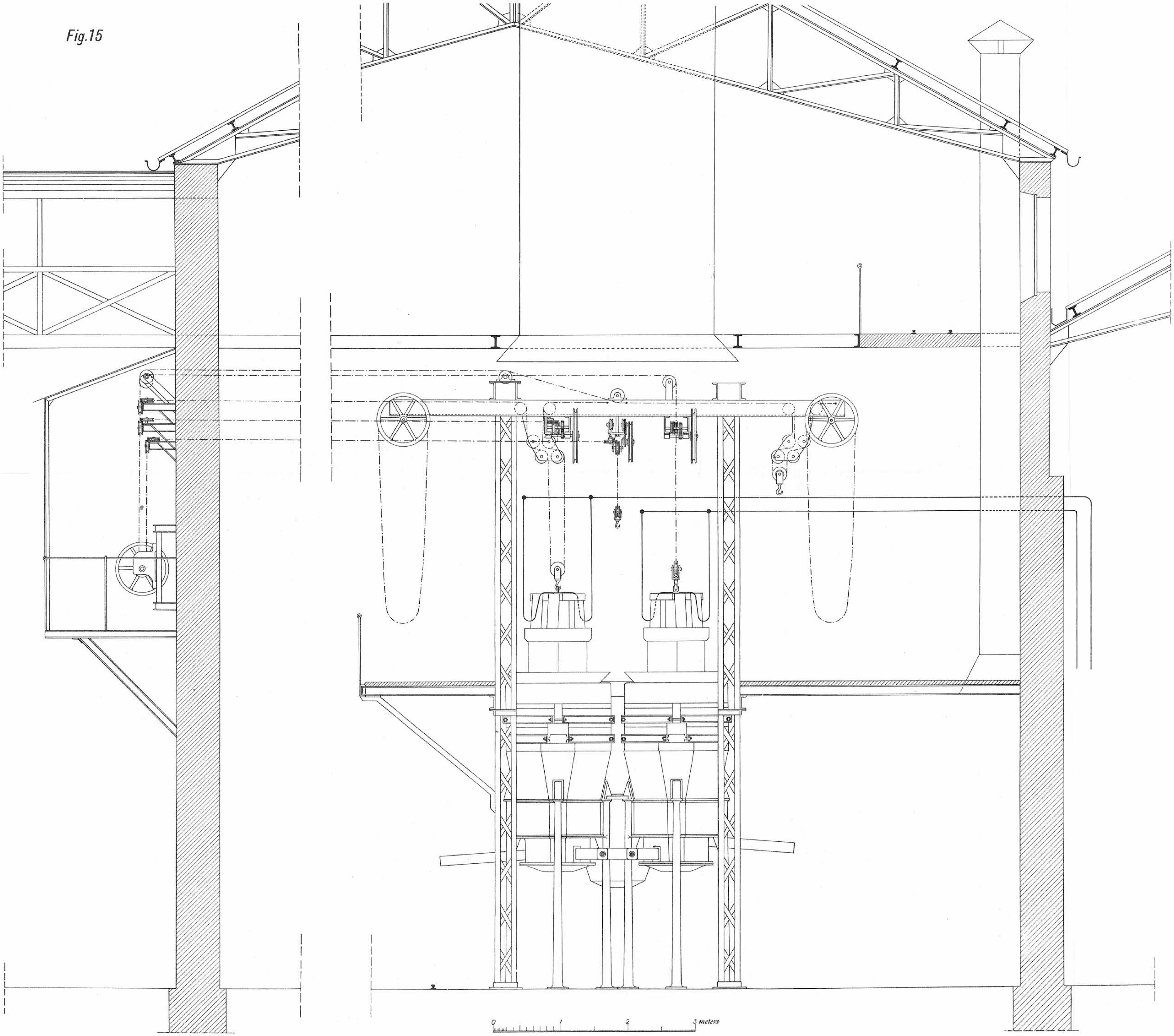

Fig. 16

Preliminary Plan of the Installation of an Electric Furnace with 4 Hearths according to Keller Producing 20 Tons of Pig Iron in 24 hours.

(Overhead Work)

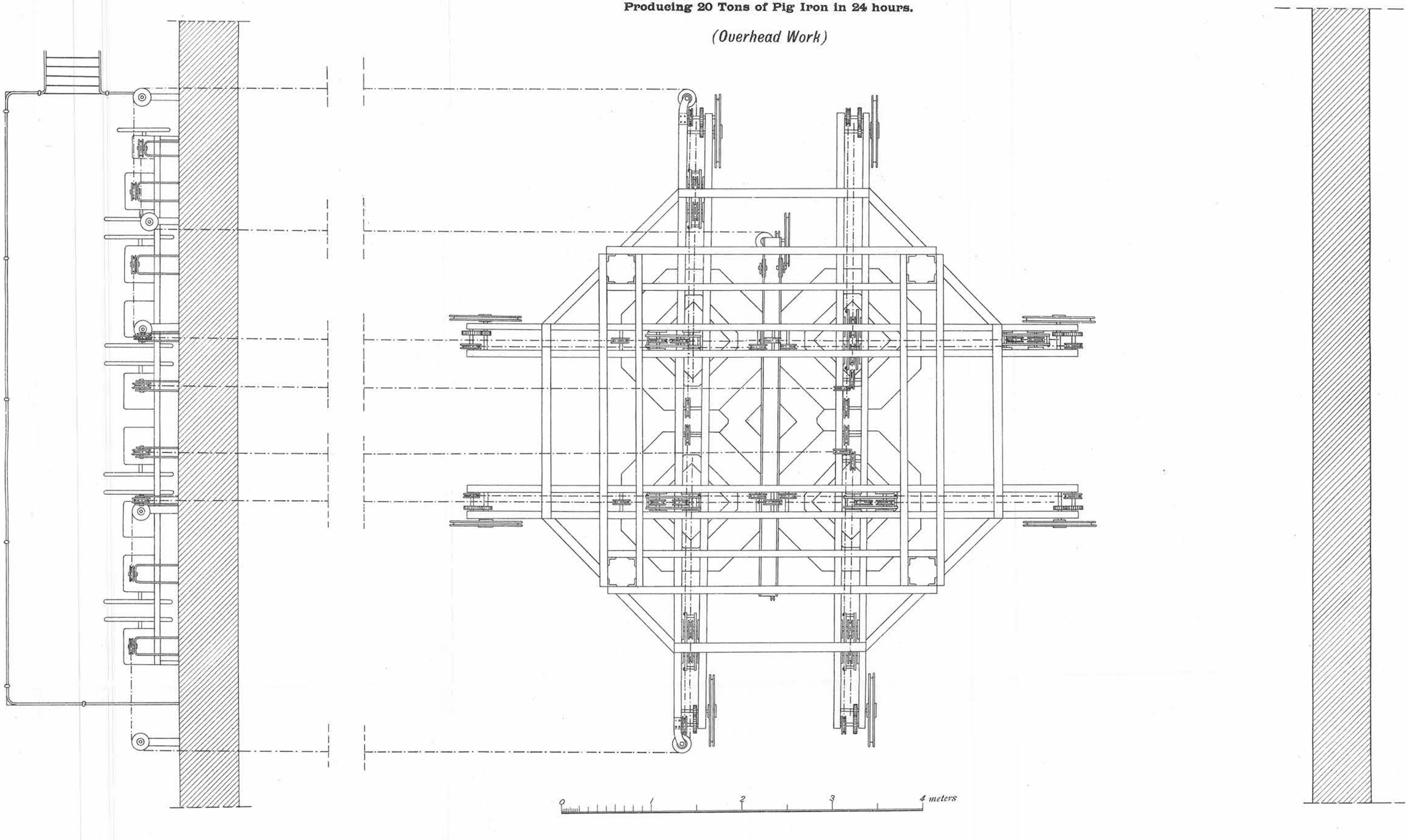

Preliminary Project for the Installation of an Electro-Thermic Plant with a Capacity of 100 Tons of Pig Iron in 24 hours.

Keller

Fig. 17

(Plan)

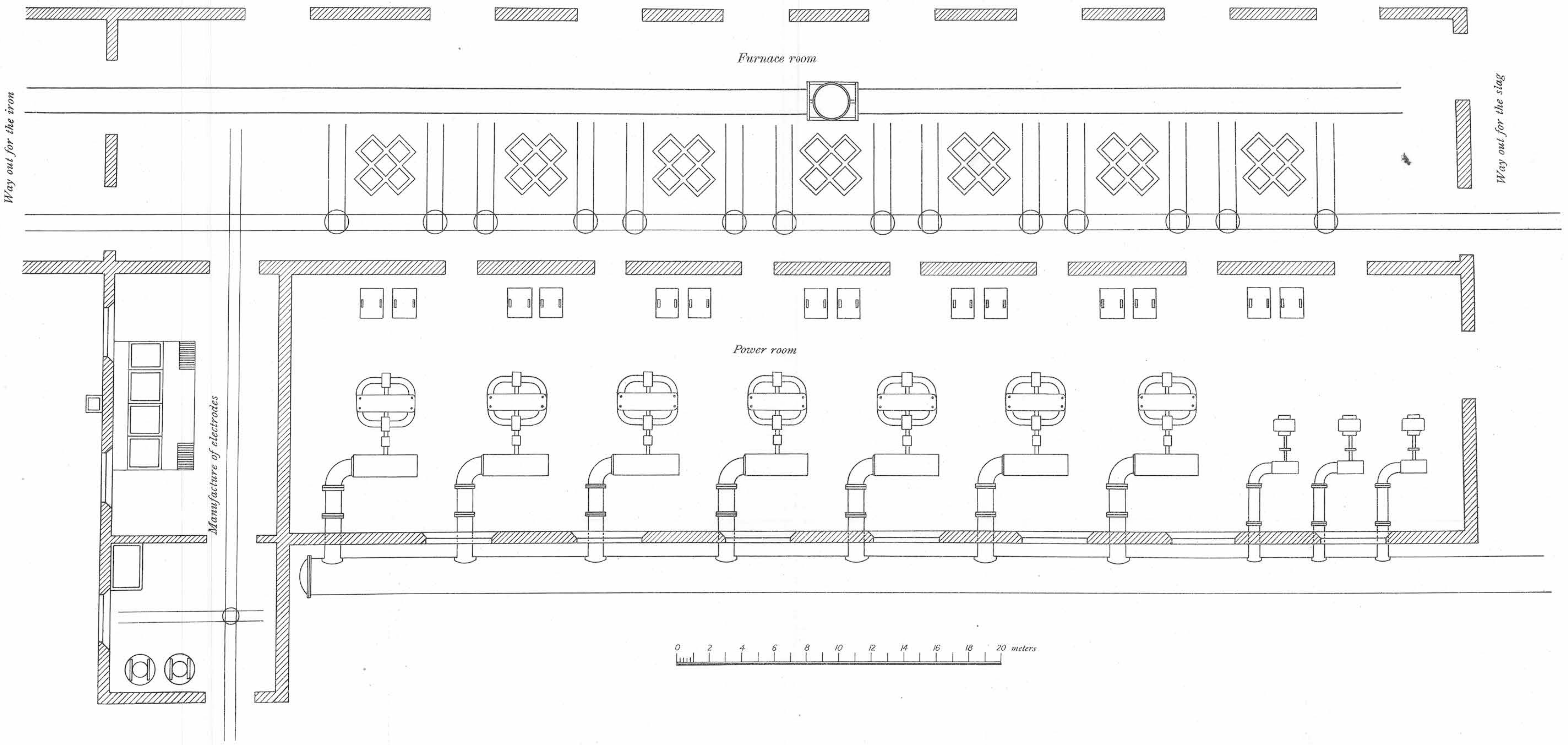

Preliminary Project for the Installation of an Electro-Thermic Plant with a Capacity of 100 Tons of Pig Iron in 24 hours.

Keller

Fig. 18

(Section)

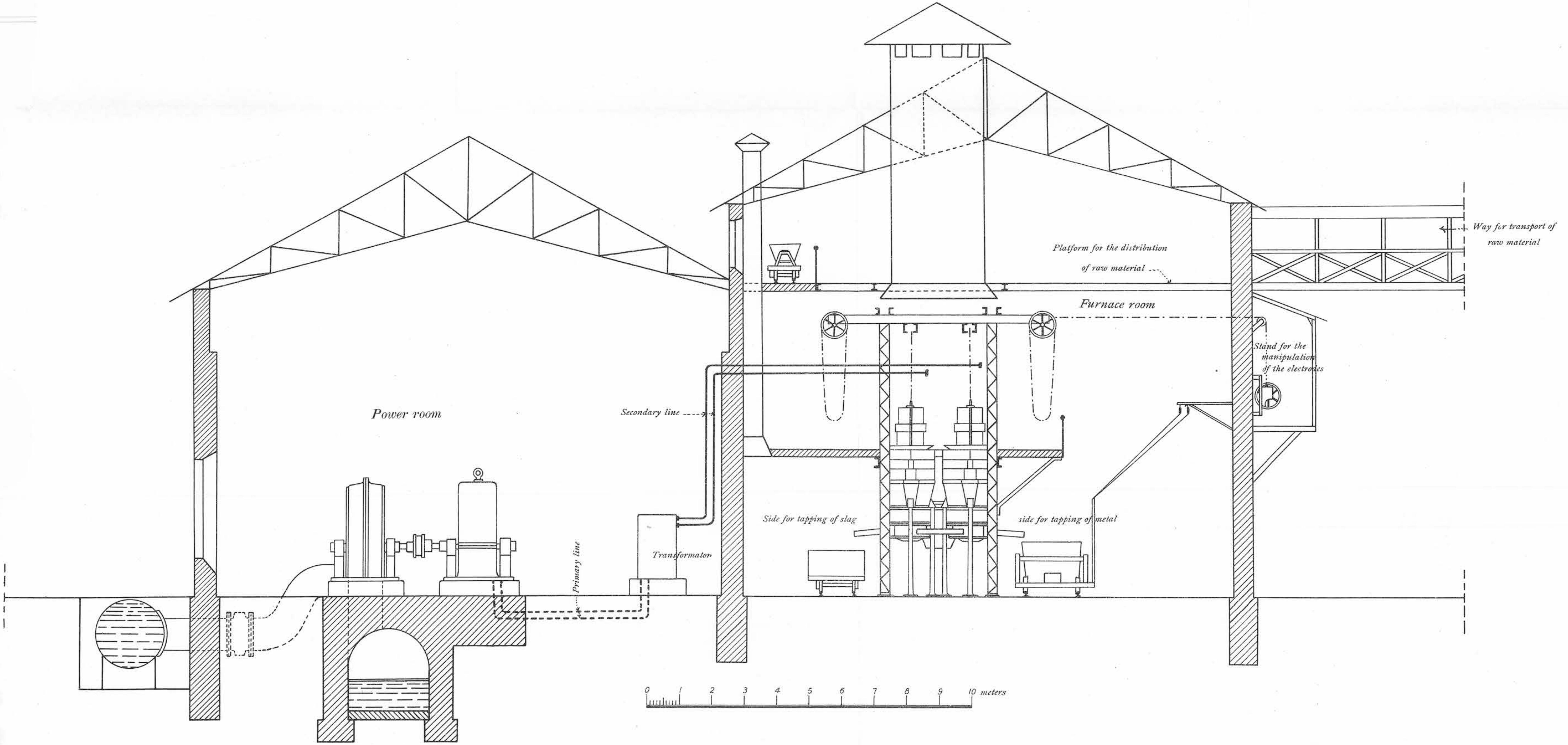

THE LATEST TYPE OF THE HARMET FURNACE

Fig. 19

vertical section

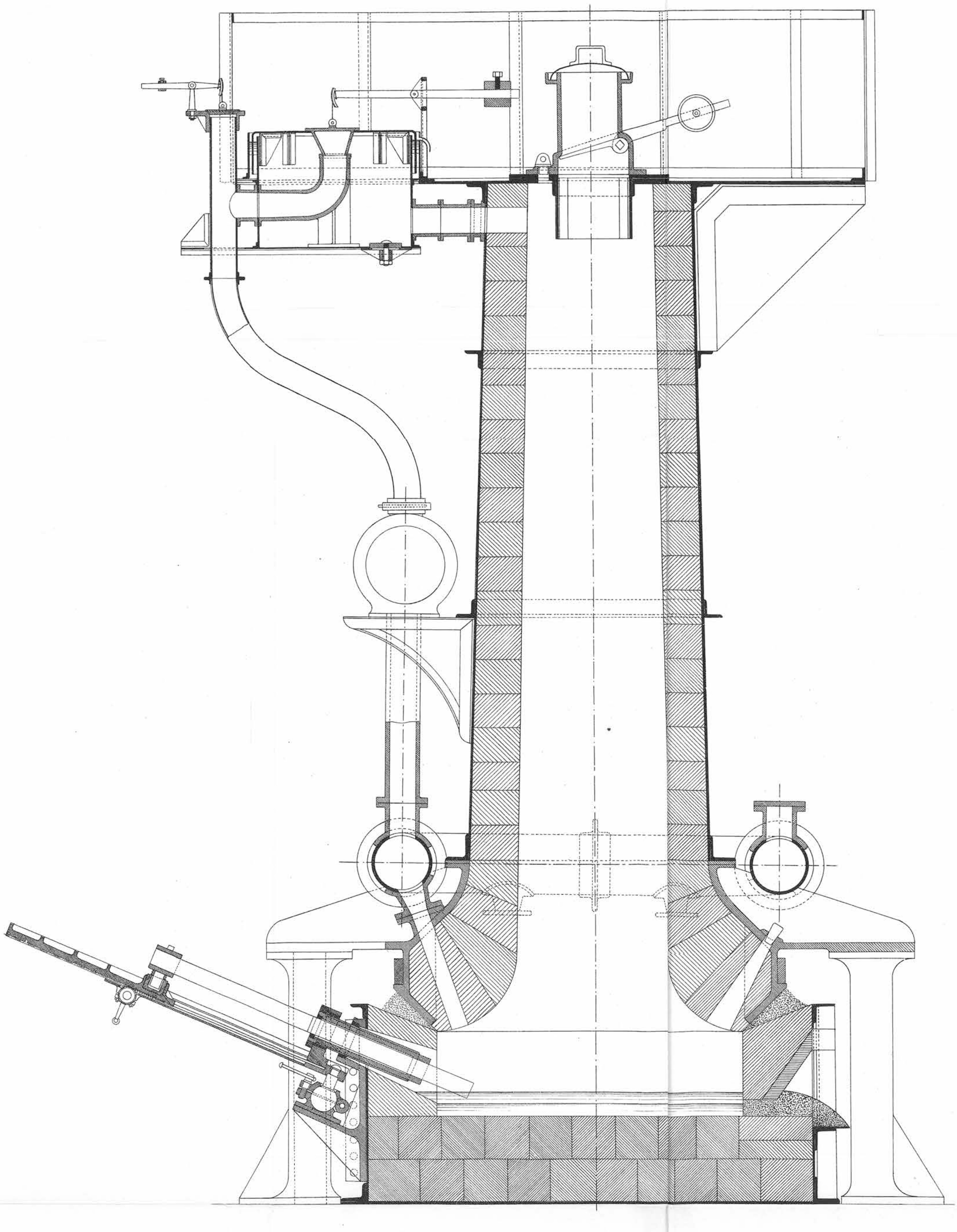

Fig. 20

horizontal section

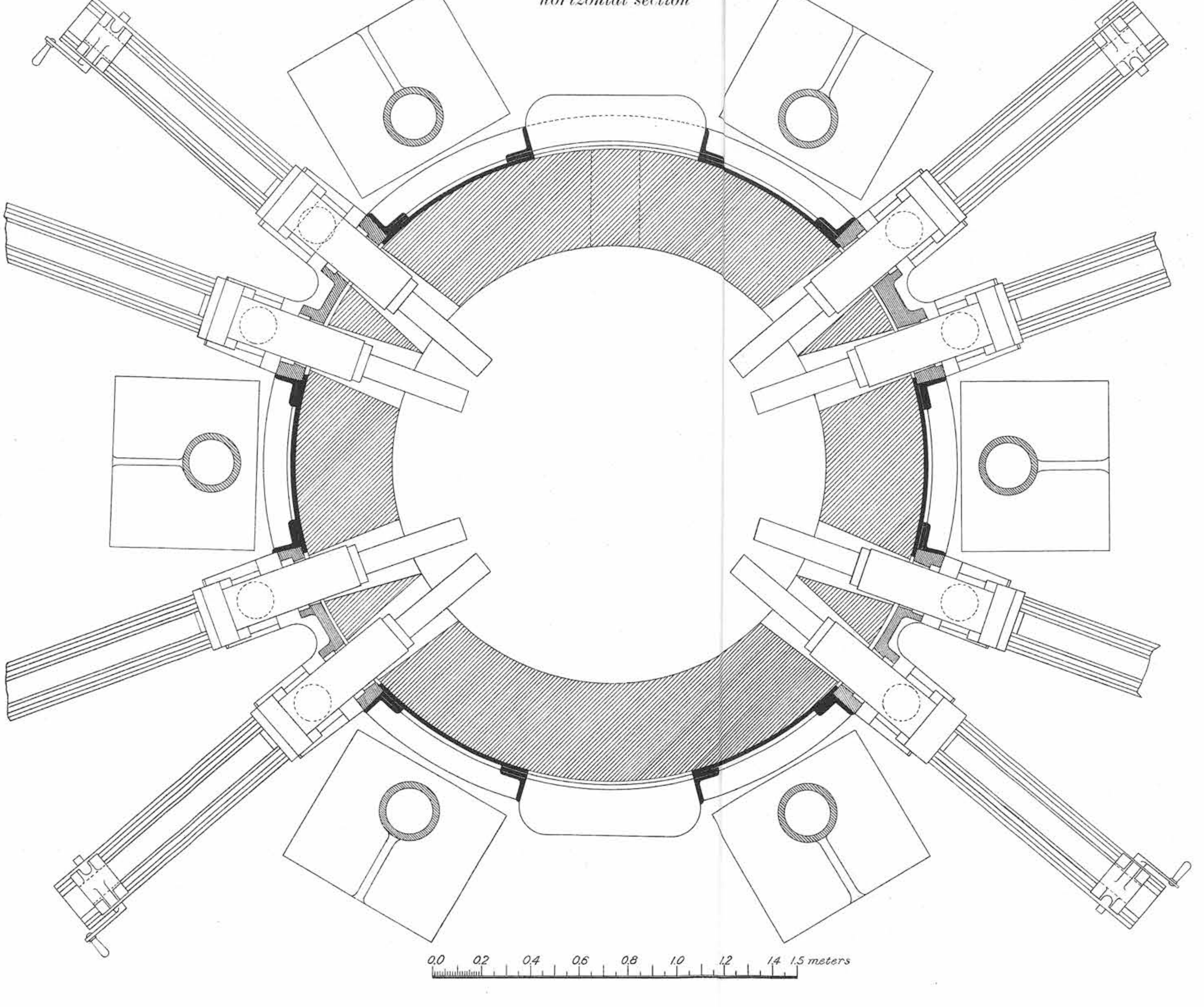

GENERAL CONCLUSIONS.

The following are the conclusions arrived at by Mr. Harbord as a result of his investigation into the metallurgy of the electric production of steel, and the electric reduction of iron ore.

1. Steel equal in all respects to the best Sheffield crucible steel can be produced, either by the Kjellin, Héroult or Keller processes, at a cost considerably less than the cost of producing a high class crucible steel.
2. At present, structural steel to compete with Siemens or Bessemer steel cannot be economically produced in the electric furnaces, and such furnaces can be used commercially for the production of only very high class steel for special purposes.
3. Speaking generally, the reactions in the electric smelting furnaces as regards the reduction and combination of iron with silicon, sulphur, phosphorus and manganese, are similar to those taking place in the blast furnace. By altering the burden and regulating the temperature, by varying the electric current, any grade of iron, grey or white, can be obtained, and the change from one grade to another is effected more rapidly than in the blast furnace.
4. Grey pig iron, suitable in all respects for Acid Steel manufacture, either by Bessemer or Siemens processes, can be produced in the electric furnace.
5. Grey pig iron, suitable for foundry purposes, can be readily produced.
6. Pig iron, low in silicon and sulphur, suitable either for the Basic Bessemer, or the Basic Siemens process, can be produced, provided that the ore mixture contains oxide of manganese, and that a basic slag is maintained by suitable additions of lime.
7. It has not been experimentally demonstrated, but from general considerations there is every reason to believe, that pig iron, low in silicon and sulphur, can be produced, even in the absence of manganese oxide in the iron mixture, provided a fluid and basic slag be maintained.
8. Pig iron can be produced on a commercial scale at a price to compete with the blast furnace only when electric energy is very cheap and fuel very dear. On the basis taken in this report, with elec-

tric energy at $10 per E.H.P. year, and coke at $7 per ton, the cost of production is approximately the same as the cost of producing pig iron in a modern blast furnace.

9. Under ordinary conditions, where blast furnaces are an established industry, electric smelting cannot compete; but in special cases, where ample water power is available, and blast furnace coke is not readily obtainable, electric smelting may be commercially successful.

It is impossible to define the exact conditions under which electric smelting can be successfully carried on. Each case must be considered independently, after a most careful investigation into local conditions, and it is only when these are fully known that a definite opinion as to the commercial possibilities of any project can be given."

Nothing requires to be added to Mr. Harbord's conclusions regarding the electric production of steel; in reference to the production of pig, however, it must be pointed out that the results obtained at Livet were results of *experiments* in furnaces not specially designed for the production of pig from iron ore. With the improved furnace, of which drawings have been given in figs. 11, 12, 13 and 14, permitting, on account of the higher column of charge, a more effective use of the heat of the resulting gases, and of the reducing power of the CO evolved, a much better figure than the one obtained would result.

The modern blast furnace, and the different methods for the making of steel as at present employed, are the result of a hundred years of experience, and have reached their present perfection through many modifications, which, in many instances, were accepted and introduced into practice only after much hesitation and opposition. The process of the electric reduction of iron ore must yet be regarded as in the experimental stage; in fact, no plant exists at the present time where iron ore is *commercially* reduced to pig by the electric process. The more remarkable, therefore, it appears, and the more gratifying it is regarding the future of electric smelting, that experiments made offhand, so to say, in furnaces not at all designed to be used for the production of pig should give a figure of cost which would enable the experimental plant employed to compete with a blast furnace in regions where electric energy can be had for $10 per E.H.P. year, and where coke is quoted at $7 per ton.

I am credibly informed that the water power at Chats Falls can be developed at a cost to produce an E.H.P. year at the rate of $4.50. There are probably many water powers favorably situated as regards good bodies of ore in the Provinces of Ontario and Quebec which can be developed as cheaply. When such power is owned by the company intending to use it for electric smelting, and peat coke or briquetted charcoal, made from mill refuse*, which would probably not cost more than $4 per ton, is employed for reduction, the cost of two of the heaviest items entering into the cost of producing pig by the electric process is reduced to one-half.

When it is considered that the electric process is applicable also to the smelting of ores, such as copper, &c., and that the furnaces are of simple construction, the temperature available 1,000° C. above that of the blast furnace, and the regulation of the heat supply under perfect control, it is reasonable to expect that the near future will witness great strides in the application of electric energy to the extraction of metal from its ores, and that familiarity with handling large currents and experience gained in electric smelting will result in solving the difficulties encountered in the smelting of ores, which up to the present time have proven refractory to all economical processes known.

---

* In the Ljungberg continuous kiln refuse wood is burnt into charcoal at 33 per cent. less cost than in heaps and with 22 per cent. higher yield.

ELECTRICIAN'S REPORT ON THE ELECTRIC SMELTING OF IRON AND STEEL IN EUROPE.

Eugene Haanel, Esq., Ph. D.,
Superintendent of Mines,
Ottawa.

Sir,—

I beg to submit herewith my report of the electrical measurements and investigations made in connection with the examination by the Commission of the different electro-thermic processes for the smelting of iron ores and the making of steel now in operation in Europe.

The results are given in metric units throughout, and are summarized at the end of the report in tabular form. A summary is given also in English units for the convenience of those not wishing to employ the metric system.

The horse-power year is, in all cases, taken as 365 days of 24 hours, and where the power is employed a smaller number of days, the cost must be corrected accordingly.

The costs are based on a rate of $10 per electric horse-power year, but the costs at any other rate can be obtained from those given by direct proportion.

THE PRODUCTION OF PIG IRON.

The results obtained on the production of pig iron are first given, in the order in which the plants were investigated.

THE HÉROULT PROCESS, LA PRAZ, FRANCE.

The first plant investigated where pig iron was manufactured was that of Mr. Héroult, at La Praz, France.

The furnace was operated for the Commission on the 7th and 8th of March.

In this furnace, see page 7 for description, the electrode is connected to one side and the carbon bottom to the other side of the electric circuit. The electrical connections are shown in Fig. 21.

The current passes through the suspended electrode and the carbon bottom through the charge, and its energy is absorbed by the resistance of the charge, which is thereby heated to the temperature required for reduction. The operation of the furnace is continuous, and need be shut down only for repairs or outside causes.

The furnace is operated with alternating current, which is generated directly on the alternator at the voltage required. The alternator is direct connected to a horizontal shaft water wheel, operated at full gate opening, and will, therefore, carry approximately a constant load. It is of the revolving field type, having 16 poles, and operating at 600 revolutions per minute, giving a periodicity of 80 cycles per second.

Regulation is effected by adjusting the electrode vertically by hand to maintain the voltage constant, and under the above conditions this will give constant current. No violent fluctuations were observed, and satisfactory regulation was readily obtained.

Arrangements were made with "La Compagnie pour la Fabrication des Compteurs" of Paris to supply a suitable recording wattmeter to measure the input of electric energy, but it arrived at La Praz too late to be used, and the only readings that could be obtained were those of the voltmeter and ammeter in circuit there, on which the following readings were taken:—

TIME. March 7th, '04. P. M.	VOLTS. Hartmann & Braun No. 116,326.	AMPERES. Hartmann & Braun instrument and shunt. No. 50,486.	Kilo-volt amperes calculated.
2.10	47	4,800	230
2.40	45	5,500	247
3.10	48	5,000	240
3.30	45	5,500	247
4.00	45	5,500	247
4.30	47	5,300	249
5.00	45	5,300	238
5.30	45	5,500	247
6.00	48	5,100	245

Length of run, hours	18
Mean volts	46
Mean amperes	5280
Mean kilo-volt-amperes	243
Total kilo-volt-ampere hours	4370

No determination of the power factor could be obtained, but a value of 0.75 would appear to be reasonable, and is assumed for purpose of calculation. This gives the following results:—

Mean kilowatts	182
Total kilowatt hours	3280
Mean horse-power	248
Total horse-power hours	4460
Total horse-power years	0.51
Output of pig iron (from Mr. Harbord) kgs	969
Horse-power years per ton of pig	0.525
Cost of electric energy per ton of pig, at $10 per horse-power year	$5.25

THE KELLER PROCESS, LIVET, FRANCE.

The second plant investigated in which pig iron was manufactured was that of Keller, Leleux & Company, at Livet, France.

Furnaces Nos. 11 and 12 were operated for the Commission on the 19th, 20th and 21st, and Nos. 1 and 2 on the 23rd, 24th and 25th of March.

First Run, Furnaces Nos. 11 and 12.

The description of this furnace is given on page 15, and a diagram of the electrical connections in Fig. 22.

The electric current passes through the charge between the suspended electrode and the carbon bottom. The energy of the current is absorbed by the resistance of the charge, which is thereby heated to the temperature required for reduction. The use of the resistance of the charge as a means of heating it makes it possible to control the temperature of the reduction within narrow limits by controlling the current, and thus work at the point which experience shows to be most favorable for obtaining the most economical results.

The external copper connection is provided to maintain the circuit when the molten iron is drawn off or the interior circuit interrupted, thus making the flow of the current independent of the casting operations. The operation of the furnace is, therefore, continuous and is not interrupted in any way by charging or casting, and it may be operated for an indefinite period without shutting down, giving very favorable conditions of load for the electric and hydraulic plant.

The furnaces are operated with alternating current generated directly on the alternator at the voltage required. The alternator is a revolving field machine, has 16 poles, and rotates at approximately 380 revolutions per minute, giving a periodicity of 50 cycles per second, and is direct connected to a horizontal shaft water wheel controlled by a governor.

The regulation of the electric input is effected chiefly by the vertical adjustment of the electrodes by hand, but this is supplemented when required by adjusting the alternator field and the water wheel governor. The load is entirely free from violent fluctuations and hand regulation requires a very small amount of attention, so that one man could readily regulate four or five furnaces. If desired, however, little difficulty should be experienced in designing an automatic regulator that would fulfil all requirements, and dispense with the services of this man.

The electric energy was measured by a Thomson recording wattmeter, obtained from "La Compagnie pour la Fabrication des Compteurs" of Paris, and after the run was completed it was calibrated by them under the same conditions as to volts, amperes, cycles and temperature as it had been subject to during the run in which it was used. The constant* 4390 was obtained and certified to as correct under these conditions.

The volts and amperes were read on the regular switchboard instruments, but as no calibrations for them could be obtained, their accuracy is not to be relied upon. The voltmeter was connected across the terminals of the alternator and includes the drop on the line. This drop in potential between the terminals of the alternator and the furnace was measured with 11,000 amperes on the circuit and found to be 5.5 volts.

The power factor was determined March 24th by Professor Barbillion, of "L'Institut Electro-technique" of Grenoble University, by means of the oscillograph. The certificate of this determination will be found on page 19. The readings of volts and amperes were taken on the switchboard instruments used during the run. The following are the results obtained:—

MEAN VOLTS.	MEAN AMPERES.	POWER FACTOR.	MEAN WATTS.	DETERMINATION.
Hartmann & Braun, No. 102,801.	Hartmann & Braun, No. 103,135.	cos. φ	Volts × amps. × cos. φ	No.
70.3	9890	0.743	516,583	I
70.1	9900	0.731	507,306	II
70.2	9895	0.737	511,945	Mean.

---

*This constant is the number by which the dial reading of the wattmeter must be multiplied to give the electric energy in watt hours. To obtain the result in kilowatt hours this constant must be divided by 1,000 and becomes 4.390.

Readings taken on Furnaces Nos. 11 and 12.

TIME. Mar. 19th, 1904. P.M.	WATTMETER. Thomson. K=4.390	VOLTS. Hartmann & Braun. No. 102,801	AMPERES. Hartmann & Braun. No. 103,135.	SPEED OF ALTERNATOR. Revolutions per minute.
4.00	97595			
4.30	97558	63.	11800	
5.00	97490	64.	11700	
5.30	97429	63.5	11700	
6.00	97347	64	11750	
6.30	97280	63.5	12000	
7.00	97210	63.5	12000	
7.30	97144	63.5	12100	
8.00	97078	63.5	12000	
8.30	97005	64.	12000	
9.00	97944	63.	12000	
9.30	97865	63.	12000	
10.00	96806	63.	12100	370
10.30	96744	65.5	11900	
11.00	96677	63.	11100	
11.30	96601	62.5	11300	
12.00	96535	64.	10800	
20th, A.M.				
12.30	96462	63.	11100	
1.00	96376	63.	11100	
1.30	96306	63.	11200	
2.00	96251	61.	10800	
2.30	96176	60.	11100	
3.00	96110	61.	10900	
3.30	96046	62.	10750	
4.00	95976	61.5	10700	
4.30	95909	62.	10800	
5.00	95838	62.5	10700	
5.30	95767	62.	10600	
6.00	95708	62.	10600	
6.30	95639	61.5	10600	
7.00	95562	59.	10700	
7.30	95498	64.5	11000	
8.00	95420	64.	10800	380
8.30	95352	64.	10800	
9.00	95282	64.	10600	
9.30	95208	64.5	10600	
10.00	95147	64.	10800	
10.30	95072	65.	10600	
11.00	95002	65.	10900	380
11.30	94925	66.	10800	
12.00	94858	65.5	10900	
P.M.				
12.30	94780	65.5	11100	
1.00	94710	65.	11050	
1.30	94644	65.	10750	
2.00	94576	65.	10700	
2.30	94511	66.	10750	
3.00	94443	66.	10600	
3.30	94379	66.	10900	
4.00	94293	65.5	10750	
4.30	94233	67.	10600	
5.00	94168	66.	10800	
5.30	94108	65.	11000	
6.00	94030	65.	10800	
6.30	93961	66.	10800	
7.00	93899	65.	11200	
7.30	93818	65.	11200	

Readings taken on Furnaces No. 11 and No. 12—*Continued.*

TIME.	WATTMETER.	VOLTS.	AMPERES.	SPEED OF ALTERNATOR.
Mar. 20th, 1904.	Thomson.	Hartmann & Braun.	Hartmann & Braun.	Revolutions per minute.
P.M.	K=4.390	No. 102,801	No. 103,135	
8.00	93737	65.	11200	
8.30	93672	65.	11100	
9.00	93612	65.	11000	
9.30	93539	63.	11200	
10.00	93484	65.	11000	
10.30	93406	64.	11000	
11.00	93329	64.	11000	
11.30	93258	64.	11000	
12.00	93198	65.	11000	
21st, A.M.				
12.30	93124	65.	11000	
1.00	93052	65.	11200	
1.30	92992	65.	11000	
2.00	92922	64.	11000	
2.30	92853	65.	11100	
3.00	92783	65.	11200	
3.30	92721	64.	11000	380
4.00	92656	65.	11000	
4.30	92588	65.	11100	
5.00	92517	65.5	11000	
5.30	92439	64.	11200	
6.00	92366	65.	11100	
6.30	92297	65,5	11200	
7.00	92226	65.5	11250	
7.30	92150	65.	11100	
8.00	92072	65.	11100	
8.30	91994	65.	11100	
9.00	91943	64.5	10800	
9.30	91868	64.5	11200	
10.00	91806	65.	11200	
10.30	91742	65.	10900	
11.00	91674	64.	11200	
11.30	91618	65.	11100	380
12.00	91535	66.	11000	
P.M.				
12.30	91461	66.5	10800	
1.00	91398	67.	10800	
1.30	91300	66.5	10800	
2.00	91234	66.	10800	
2.30	91155	66.	11000	
3.00	91087	66.	10800	
3.30	91017	66.	10700	
4.00	90943	66.	10800	
4.30	90873	67.	10800	
5.00	90800	65.5	10800	
5.30	90718	66.	10800	
6.00	90652	67.	10700	
6.30	90576	67.	10500	
7.00	90519	66.	10800	
7.30	90438	66.	10900	
8.00	90360	67.5	10800	
8.30	90284	68.	10600	
9.00	90229	67.	10800	
9.30	....	....	....	
10.00	....	....	....	
10.30	....	....	....	
11.00	89908	66.	10800	

Length of run hours	55

Results from Voltmeter and Ammeter Readings.

Mean volts on alternator (not calibrated)	64.6
Drop of potential on line	5.5
Mean volts on furnace	59.1
Mean amperes (not calibrated)	11038
Mean kilo-volt amperes	652

Results from Wattmeter Reading and Power Factor Determination.

Total dial reading of wattmeter	7687
Constant of wattmeter, for kilowatt hours	4.390
Total kilowatt hours	33700
Mean kilowatts	613
Mean power factor from above determination	0.737
Mean kilo-volt-amperes	832
Mean electric horse-power	834
Total horse-power hours	45800
Total horse-power years	5.23
Output of pig (obtained from Mr. Harbord) kgs	9868
Horse-power years per ton of pig	0.53
Cost of electric energy per ton of pig, at $10 per horse-power year	$5.30

It will be noted that the above results show a discrepancy of 27% in the kilo-volt-amperes, as obtained from the voltmeter and ammeter readings, and as obtained from the wattmeter readings and power factor determination. This discrepancy does not, however, render the correctness of the wattmeter and power factor doubtful since the ammeter is entirely unreliable; one of the same construction and capacity used in the following run having been found on calibration to read 31% low.

Previous to the above run the current had been taken off from the furnace for several hours to insert the recording wattmeter in the circuit, and the molten iron in the crucible had become chilled and could not again be heated sufficiently to cast. It is not known to what extent this chilling affected the operation, but the working of the furnace became unsatisfactory to Mr. Keller, who decided to shut it down, and later continued the experiments on Furnaces Nos. 1 and 2.

Second Run, Furnaces Nos. 1 and 2.

The alternator in this case was operated at about 280 revolutions per minute, giving a periodicity of 37 cycles per second, but the speed varied considerably in different parts of the run.

Electrical readings were taken on the switchboard voltmeter and ammeter, which were afterwards calibrated, and the power factor at the electrodes was determined by means of the oscillograph. These calibrations and the determination of the power factor were made by Professor Barbillion, of "L'Institut Electro-technique" of Grenoble University, on the 27th and 28th of March. The certificate will be found on page 19. The recording wattmeter could not be inserted in this circuit, and, therefore, the watts could not be read directly.

The voltmeter was connected directly across the electrodes, eliminating the drop in the line. It was taken from the board and calibrated in Grenoble. Instead of calibrating it in the condition that it had been used, the needle was, by mistake, first set back to zero and to compensate for this one volt is subtracted from the reading of the instrument in the following table, which was as near as could be judged the amount the needle was changed. This does not, of course, make the calibration strictly correct, but more nearly so than by using the readings as taken, and the possible error is certainly within 2%.

Readings on Hartmann & Braun, No. 130,285.	Correct Volts.
47	46.15
49	48.16
51	50.10
53	52.28
55	54.21
57	56.15
59	58.07
61	60.14

Curve, Fig. 23, is constructed from these readings.

The ammeter was calibrated in position on the switchboard with a standard shunt and ammeter inserted in the circuit. The following readings were taken. Those indicated by a ° were taken by Professor Barbillion, and those indicated by a + were added from our own observation.

Readings on Hartmann & Braun No. 103137.	Readings on Standard Shunt and Ammeter.	Readings on Hartmann & Braun No. 103137.	Readings on Standard Shunt and Ammeter.
+ 4075	5575	+ 6188	8250
+ 4350	5950	° 6184	8260
+ 4500	6100	° 6246	8293
° 4562	6185	° 6313	8400
+ 4800	6400	° 7775	10125
+ 5000	6700		

Curve, Fig. 24, is constructed from these readings.

Five determinations of the power factor were made. The first three are here given, and their mean used in the calculations. The other two, having been made under conditions of load varying quite widely from those of the run, are not used. The volts in these determinations were read on the switchboard voltmeter, which was connected across the terminals of the alternator, and is not the voltmeter used in the run. The amperes were read on both the switchboard ammeter and the standard ammeter. Following are the results obtained:—

MEAN VOLTS. — Hartmann & Braun. No. 130283.	MEAN AMPERES. — Hartmann & Braun. No. 103137.	MEAN AMPERES. — Standard Ammeter.	POWER. FACTOR — (cos. φ)	Mean Watts.	Determination. No.
67.5	6313	8400	0.616	349272	1
67.6	6246	8293	0.530	302121	2
67.3	6184	8260	0.545	302964	3
67.5	6248	8318	0.564	318119	Mean Results.

The above determinations were made with the alternator operating at 270 to 280 revolution per minute.

The following readings were taken during the second run:—

TIME. — Mar. 23rd. 1904 P. M.	VOLTS.		AMPERES.		SPEED OF ALTERNATOR. — Rev. per minute.
	Hartmann & Braun. No. 130285	Correct Volts. See Curve Fig. 23.	Hartmann & Braun. No. 103137.	Correct Amperes. See Curve Fig. 24.	
12.00	56	55.1	4900	6600	
12.30	58	57.1	5000	6730	
1.00	57	56.1	5000	6730	
1.30	55	54.1	5100	6860	
2.00	58	57.1	4700	6350	
2.30	57	56.1	5100	6850	
3.00	54	53.1	4400	5980	
3.30	57	56.1	4000	5480	
4.00	53	52.1	4100	5600	
4.30	50	49.1	4500	6100	
5.00	54	53.1	4100	5600	
5.30	53	52.1	4300	5850	
6.00	52	51.1	4300	5850	
6.30	60	59.1	5000	6730	230
7.00	58	57.1	5100	6860	310
7.30	58	57.1	4500	6100	
8.00	61	60.1	4500	6100	
8.30	61	60.1	4400	5980	
9.00	60	59.1	4500	6100	
9.30	60	59.1	4500	6100	
10.00	60	59.1	4500	6100	
10.30	59	58.1	4600	6220	
11.00	60	59.1	5500	7350	345
11.30	61	60.1	5600	7480	
12.00	57	56.1	6000	7980	

TIME.	VOLTS.		AMPERES.		SPEED OF ALTERNATOR.
Mar. 24th, 1904 A.M.	Hartmann & Braun. No. 130285	Correct Volts. See Curve, Fig. 23.	Hartmann & Braun. No. 103137.	Correct Amperes. See Curve, Fig. 24.	Rev. per minute.
12.30	60	59.1	5500	7350	270
1.00	59	58.1	6300	8360	280
1.30	56	55.1	5500	7350	
2.00	59	58.1	5300	7110	
2.30	56	55.1	5500	7350	
3.00	55	54.1	5500	7350	
3.30	58	57.1	5200	6980	
4.00	55	54.1	5600	7480	
4.30	55	54.1	5600	7480	
5.00	57	56.1	5500	7350	
5.30	56	55.1	5500	7350	
6.00	55	54.1	5500	7350	250
6.30	58	57.1	5000	6730	
7.00	58	57.1	5300	7110	
7.30	55	54.1	5600	7480	
8.00	55	54.1	5500	7350	
8.30	56	55.1	5500	7350	
9.00	55	54.1	5500	7350	250
9.30	55	54.1	5600	7480	
10.00	54	53.1	5500	7350	
10.30	55	54.1	5500	7350	
11.00	54.5	53.6	5300	7110	
11.30	56	55.1	5500	7350	
12.00	55	54.1	5600	7480	
P.M.					
12.30	59	58.1	5200	6980	
1.00	56	55.1	5500	7350	
1.30	57	56.1	5200	6980	
2.00	58	57.1	5200	6980	
2.30	57	56.1	5000	6730	
3.00	56	55.1	5300	7110	
3.30	56	55.1	5400	7230	
4.00	55	54.1	5500	7350	
4.30	54.5	53.6	5600	7480	
5.00	56	55.1	5500	7350	
5.30	54	53.1	5600	7480	
6.00	53	52.1	5800	7730	
6.30	56.5	55.6	5400	7230	
7.00	56	55.1	5300	7110	
7.30	55	54.1	5500	7350	270
8.00	56	55.1	5400	7230	
8.30	54	53.1	5600	7480	
9.00	54	53.1	5600	7480	
9.30	55.5	54.6	5500	7350	
10.00	54	53.1	5600	7480	
10.30	54	53.1	5800	7730	
11.00	56	55.1	5400	7230	
11.30	57	56.1	5800	7730	
12.00	60	59.1	5500	7350	
25th, A.M.					
12.30	59	58.1	5600	7480	
1.00	56	55.1	6000	7980	
1.30	55	54.1	6000	7980	
2.00	57	56.1	5900	7850	280
2.30	55.5	54.6	6000	7980	
3.00	55.5	54.6	6100	8110	
3.30	57	56.1	6000	7980	

TIME. Mar. 25th, 1904 A. M.	VOLTS.		AMPERES.		SPEED OF ALTERNATOR.
	Hartmann & Braun. No. 130285.	Correct Volts. See Curve Fig. 23.	Hartmann & Braun. No. 103137.	Correct Amperes. See Curve Fig. 24.	Rev. per minute.
4.00	55	54.1	6200	8240	
4.30	56	55.1	5900	7850	
5.00	58	57.1	5800	7730	
5.30	56	55.1	6000	7980	
6.00	55	54.1	6000	7980	
6.30	58	57.1	5900	7850	
7.00	55	54.1	6300	8360	
7.30	55	54.1	6400	8490	
8.00	55	54.1	6200	8240	
8.30	54.5	53.6	6300	8360	
9.00	54	53.1	6200	8240	
9.30	57	56.1	5800	7730	
10.00	54.5	53.6	6000	7980	
10.30	54	53.1	5900	7850	280
11.00	57	56.1	5600	7480	
11.30	55	54.1	5800	7730	
12.00	54	53.1	5900	7850	

Length of run, hours	48
Mean volts on furnace	55.3
Mean amperes	7247
Mean kilo-volt-amperes	401
Total kilo-volt-ampere hours	19240
Mean power factor	0.564
Mean kilowatts	226
Total kilowatt hours	10840
Mean horse power	308
Total horse-power hours	14750
Total horse-power years	1.69
Output of pig iron (from Mr. Harbord) kgs	6692
Horse-power years per ton of pig	0.25
Cost of electric energy per ton of pig, at $10 per horse-power year	$2.50

It will be observed that the consumption of electric energy per ton of output is less than one-half as great in the case of Furnaces Nos. 1 and 2 as in Furnaces Nos. 11 and 12. This great variation is not to be ascribed to any material difference in design or construction, but rather to the conditions of operation.

The power factor for Furnaces Nos. 11 and 12 is fairly low, and for Nos. 1 and 2 extremely low. This is doubtless due mainly to the iron casing which forms a magnetic circuit around each shaft of the furnace and is highly magnetized by the large current giving to the circuit a very high reactance. In case of the erection of a new plant, this iron casing would be omitted between the two shafts, or entirely. Either change should result in a very great improvement of the power factor, and a corresponding diminution of the kilo-volt-ampere input required, and give very much better conditions of operation for the alternator. A further improvement of the power factor would be effected by using current at 25 cycles. There seems to be no inherent reason why a reasonably high power factor cannot be obtained by careful attention to all of the details of design affecting the electric circuit.

The principal electrical difficulties are in connection with the very large currents required at low voltage, and for furnaces of larger output the current will increase in almost direct proportion to the power required, the voltage increasing very little, if any. Mr. Keller has estimated that a furnace having a capacity of 20 tons per day of 24 hours would require 28,000 amperes and 70 volts. It would be extremely important, therefore, to have the lines carrying this current as short as possible to avoid excessive line loss and excessive cost of conductor. Likewise, the design of the electric machinery to furnish such large currents presents especial difficulties, and its construction is expensive, whether the current is generated directly at the voltage required or reduced by step-down transformers from a convenient generator voltage. In the former case the generating station should be located immediately alongside of the furnaces; in the latter, they may be separated as convenient, the current being transmitted to transformers located directly at the furnaces, and stepped down to the voltage required.

In the new design for furnaces of larger capacity (see page 21) the arrangement with four shafts will facilitate the use of quarter-phase current, which, in case transformers are used, could be generated and transmitted three-phase, if found desirable. The construction can also be modified for the use of three-phase current directly on the furnace, if required.

THE MANUFACTURE OF STEEL.

Four plants were investigated in which steel was manufactured. The electrical data obtained on the production of steel in these plants will be given in the order in which they were visited.

THE KJELLIN PROCESS, GYSINGE, SWEDEN.

The first plant was that at Gysinge, visited February 7th to 10th.

This process is based on the principle of induction of the ordinary transformer. Surrounding a leg of the magnetic circuit of a transformer is placed the furnace, made of suitable refractory material, in the form of a circular trough, in which the metal to be melted is placed, and becomes the secondary conductor forming one short circuited turn, and is heated by the I^2 R loss of the current induced in it.

The transformer core is of laminated iron, firmly clamped with side plates and bolts. The winding is placed on one leg only, the primary being next to the core, and the secondary outside. The primary is wound for 3,000 volts, and is insulated largely with mica. It is provided with ventilating spaces inside and outside, and a water jacket protects it from the direct radiation of the furnace. The arrangement of the parts is shown in drawing, Figs. 1 and 2.

A portion of the molten steel is allowed to remain in the furnace after tapping, for the purpose of maintaining the secondary circuit, and to this the materials of the next charge are added as rapidly as they will liquify, until the whole charge has been added, thus making the operation continuous. This avoids the difficulty, after the furnace has been started and heated up, of establishing the circuit through the solid pig iron and scrap.

The electric current for operating the furnace is obtained from a single-phase revolving field alternator, which is rated at 3,000 volts and 90 amperes, and which has 24 poles, and operates at a nominal speed of 75 revolutions per minute, giving a periodicity of 15 cycles per second. It is arranged with a vertical shaft, and is direct connected to a water wheel.

The following electrical instruments were used during the first two runs made:—

The voltage was measured with a Weston portable alternating current voltmeter, having a scale reading up to 150, and connected in series with multiplying resistance, giving a ratio of 25 : 1.

The current was read on two Hartmann & Braun ammeters, connected in parallel, and having scales reading 50 and 60 amperes respectively. These ammeters were calibrated by comparison with a Siemens & Halske standard ammeter, and the readings corrected accordingly. The calibration curves are given in Figs. 25 and 26.

The power was measured by means of a Weston portable indicating wattmeter, having a scale reading up to 150. The current coil used was arranged for 120 amperes, and multiplying resistances were connected in series with the voltage coil to make it suitable for 3,000 volts. This gives a ratio of 2.4 : 1 to obtain the results in kilowatts.

For the third run recorded, the regular switchboard instruments were used, and the readings corrected from calibrating readings taken with the two sets of meters connected in circuit together, to agree with those above described.

These standard instruments were obtained from David Bergman, a consulting engineer of Stockholm, and are believed to be reliable.

Charge No. 546, February 8th. Readings were taken as follows:—

Time of Reading.	VOLTS Weston Instrument No. 4154 R=25 : 1	AMPERES. Hartmann & Braun Inst. No. 33521 See Curve Fig. 25.	AMPERES. Hartmann & Braun Inst. No. 115346 See Curve Fig. 26.	KILO. WATTS. Weston Instrument. No. 2598. R=2.4 : 1	Revolutions per Minute
A.M.					
11.50	115.5	17.5	28.0	49.0	
12.00	112.5	21.0	34.0	59.5	63
P.M.					
12.15	115.5	21.5	35.5	63.0	70
12.30	117.0	22.0	37.0	64.5	
12.45	113.0	25.2	44.5	66.5	
1.00	116.5	25.0	44.5	66.0	69
1.30	108.0	26.5	45.0	65.5	66
2.00	109.0	26.3	45.5	64.3	66
2.30	107.5	25.5	45.0	64.0	66
3.00	105.0	28.5	48.0	64.0	
3.30	103.0	29.0	49.0	62.5	
4.00	101.5	29.0	49.0	62.0	
4.30	102.0	28.7	49.3	62.0	67
5.00	102.5	29.0	49.3	61.8	67
5.30	102.5	29.5	50.0	61.5	

This run began at 11.50 and continued to 5.50.

Corrected Readings and Results.

Time of Reading	Volts	Amperes.	Kilo.-volt Amperes.	Kilo. Watts.	Power Factor	Cycles per Second.
A.M.						
11.50	2888	53.0	153.0	117.5	0.769	
12.00	2812	64.5	181.4	142.7	0.787	12.6
P.M.						
12.15	2888	67.0	193.4	151.0	0.782	14.0
12.30	2925	69.3	202.8	154.7	0.763	
12.45	2825	81.5	230.0	159.5	0.694	
1.00	2912	81.5	237.0	158.3	0.669	13.8
1.30	2700	83.5	225.0	157.0	0.698	13.2
2.00	2725	84.0	228.6	154.2	0.675	13.2
2.30	2688	82.5	221.5	153.5	0.693	13.2
3.00	2625	90.0	236.0	153.5	0.652	
3.30	2575	91.5	236.0	150.0	0.636	
4.00	2538	91.5	232.0	148.6	0.641	
4.30	2550	91.7	234.0	148.6	0.636	13.4
5.00	2562	92.0	235.5	148.0	0.628	13.4
5.30	2562	93.5	239.0	147.5	0.618	

Length of run, hours	6
Mean kilo-volt amperes	217.3
Total kilo-volt ampere hours	1304
Mean kilowatts	142.8
Total kilowatt hours	857

Mean horse-power	195
Total horse-power hours	1165
Total horse-power years	0.133
Output of ingot (obtained from Mr. Harbord) kgs	1030
Horse-power years per ton of ingot	0.13
Cost of electric energy per ton of ingot, at $10 per horse-power year	$1.30
The mean power factor for the run is	0.672
And for the 2½ hours of full load current is	0.635

Charge No. 547, February 8th. Readings were taken as follows:—

Time of Reading.	Volts. Weston Instrument. No. 4154. R=25 : 1	Amperes. Hartmann & Braun Inst. No. 33521. See Curve Fig. 25.	Amperes. Hartmann & Braun Inst. No. 115346. See Curve Fig. 26.	Kilo. Watts. Weston Instrument. No. 2598 R=2. 4. : 1	Revolutions per Minute of Alternator.
P.M.					
5.50	120.0	18.0	27.5	53.5	65
5.55	112.0	20.0	31.0	57.0	
6.05	132.5	19.5	29.5	51.0	
6.15	110.5	21.2	33.0	62.1	68
6.30	119.0	21.0	33.0	61.3	
6.45	117.0	22.5	36.0	63.5	
7.00	112.5	23.0	38.0	64.3	67
7.30	118.0	26.0	41.5	63.5	66
8.00	115.0	27.0	44.5	65.0	
8.30	112.5	27.0	43.0	64.7	
9.00	114.0	26.5	44.5	64.0	
9.30	115.0	28.5	47.0	63.5	67
10.00	123.0	28.5	47.5	62.5	
10.30	117.0	29.0	48.5	62.0	
11.00	108.0	29.0	48.5	61.5	
11.30	107.5	30.0	48.0	61.0	67
12.00	110.0	29.5	48.5	61.0	67
Feb. 9th, A.M.					
12.30	103.0	30.0	49.0	61.0	67

This run began at 5.50 and continued until 12.30.

Corrected Readings and Results.

Time of Reading	Volts.	Amperes.	Kilo. Volt-Amperes.	Kilo.-Watts.	Power Factor.	Cycles per Second.
P.M.						
5.50	3000	53.0	159.0	128.3	0.805	13.0
5.55	2800	59.5	166.5	136.7	0.821	
6.05	3312	57.0	188.6	122.3	0.650	
6.15	2762	63.0	174.0	149.0	0.857	13.6
6.30	2975	63.0	187.4	147.0	0.785	
6.45	2925	68.7	200.7	152.4	0.760	
7.00	2812	71.5	201.0	154.3	0.769	13.4

Time of Reading.	Volts.	Amperes.	Kilo Volt-Amperes.	Kilo.-Watts.	Power Factor.	Cycles per Second.
P.M.						
7.30	2950	78.8	232.0	152.4	0.658	13.2
8.00	2875	83.5	240.0	156.0	0.651	
8.30	2812	81.5	229.0	155.3	0.678	
9.00	2850	83.0	236.5	153.5	0.651	
9.30	2875	88.5	254.5	152.3	0.600	13.4
10.00	3075	89.0	273.5	150.0	0.549	
10.30	2925	91.0	266.0	148.7	0.559	
11.00	2700	91.0	245.5	147.5	0.602	
11.30	2688	91.5	245.0	146.3	0.598	13.4
12.00	2750	91.5	251.5	146.3	0.583	13.4
12.30	2575	92.5	238.0	146.3	0.615	13.4

Length of run, hours	6⅔
Mean kilo-volt-amperes	232
Total kilo-volt-ampere hours	1546
Mean kilowatts	149
Total kilowatt hours	994
Mean horse-power	203
Total horse-power hours	1350
Total horse-power years	0.154
Output of ingot (obtained from Mr. Harbord) kgs	955
Horse-power years per ton of ingot	0.16
Cost of electric energy per ton of ingot, at $10 per horse-power year	$1.60
The mean power factor for the run is	0.649
And for three hours of full load current	0.587

Charge No. 549, February 9th. Readings were taken as follows:—

Time of Reading	Volts.	Amperes.	Kilo.-Watts.	Revolutions per Minute of Alternator.
	Hartmann & Braun Instrument. No. 114117.	Hartmann & Braun Instrument. No. 113409.	Hartmann & Braun Instrument. No. 114866.	
A.M.				
9.20	3000	40.0	125.0	
10.15	2910	35.5	124.0	
10.30	2980	37.0	132.5	
11.00	2950	45.5	140.0	
11.30	2970	45.5	141.0	
12.00	2920	51.0	142.0	70
P.M.				
12.30	2910	54.0	142.5	
1.00	2880	55.5	142.0	
1.30	2880	57.0	142.0	
2.00	2870	58.0	140.0	
2.30	2880	60.5	140.0	
4.15	2880	65.0	138.0	
4.30	2870	65.5	138.0	
5.00	2880	66.5	138.0	

This run began at 9.20 and continued until 5.00.

Corrected Readings and Results.

Time of Reading.	Volts.	Amperes.	Kilo.-Volt Amperes.	Kilo.-Watts.	Power Factor.	Cycles per Second.
A.M.						
9.20	2940	57.0	167.5	141.3	0.844	
10.15	2815	52.0	146.5	140.0	0.956	
10.30	2913	54.0	157.2	151.0	0.962	
11.00	2870	64.0	183.6	160.3	0.874	
11.30	2900	64.0	185.5	161.5	0.872	
12.00	2830	71.3	202.0	162.8	0.807	14
P.M.						
12.30	2815	75.5	212.5	163.5	0.770	
1.00	2775	77.0	213.7	162.8	0.762	
1.30	2775	79.0	219.2	162.8	0.743	
2.00	2760	80.0	220.7	160.3	0.725	
2.30	2775	83.0	230.4	160.3	0.695	
4.15	2775	89.0	247.0	157.7	0.638	
4.30	2760	89.5	247.0	157.7	0.638	
5.00	2775	91.0	252.5	157.7	0.625	

Length of run, hours	7⅔
Mean kilo-volt amperes	209.1
Total kilo-volt-ampere hours	1600
Mean kilowatts	157
Total kilowatt hours	1204
Mean horse-power	214
Total horse-power hours	1640
Total horse-power years	0.187
Output of ingot not obtained	—
The mean power factor for the run is	0.768
And for the one hour of full load current is	0.634

It should be noted that only the first of the three runs recorded represents the standard commercial product of the furnace, the other two being more or less experimental, and, therefore, should not be included in obtaining cost of product.

The electric input varies to some extent, being lower at the beginning of the run and increasing as the charge is added to the full load about the middle. The variation is not great, and the mean is generally not less than 90% of full load, but the cost of electric energy would be increased in that proportion, where the cost per horse-power year is based on the maximum demand.

Mr. Kjellin calculates that the efficiency of the furnace would be slightly improved by increasing the electric input to 200 kilowatts, the output being at least 50% greater, and the losses about the same.

The principal disadvantage electrically in this system is the very low power factor obtained, resulting from two causes, namely, the very high self-induction of the secondary due to its wide separation from the primary by the furnace wall and ventilating space, and its low resistance. In the present case, with a periodicity of 13 to 14 cycles, the power factor is only slightly above 0.6 at full load and with increased capacity the resistance will be reduced, while the inductance remains about constant, giving a still lower power factor, or requiring a lower frequency.

Mr. Kjellin has calculated that for a furnace of 15 tons capacity per charge it would be necessary to reduce the periodicity to about 4 cycles per second to get a power factor of 0.6, or that for three such furnaces, surrounding the three legs of a three-phase transformer, and made common in the center, with a joint capacity of 45 tons, the same frequency would be required.

This extremely low periodicity, combined with a low power factor, will make the cost of generators much higher than for standard machines.

The system has, on the other hand, two important advantages. First, that it takes current directly at a voltage suitable for generation and transmission over moderate distances, the 3,000 volts here used being capable of increase to 5,000 or 6,000 volts, where required, which should be ample for any case arising in this class of work; and, second, that no cables, connections, or electrodes, with their attendant cost, loss of power, and necessity of attention, are required in the secondary circuit, and for large furnaces, using currents from 10,000 to 30,000 amperes, this is an important item.

THE HÉROULT PROCESS.

Kortfors, Sweden.

The plant in operation at Kortfors was visited by the Commission on February 10th and 11th.

This furnace was used for the manufacture of high grade steel, entirely from old scrap.

The furnace is constructed with an outer casing of steel plate, lined with suitable refractory material. It is arranged with two carbon electrodes passing vertically through the roof and made adjustable. The section of the roof between the electrodes is made of bronze, in order that no magnetic circuit may surround them.

The cold scrap iron or steel is charged into the furnace, and the electrodes lowered sufficiently to establish electric circuit, the current passing between them through the charge. In the early part of the heat, while the iron is still in the solid state, the electrodes are generally in contact with parts of it, and the energy is largely absorbed by the numerous high resistance contacts and small arcs between the pieces in the passage of the current through the charge. During this stage the resistance of the hearth varies greatly with violent fluctuations of the current, due to the continual change in contacts and disruption of circuits, as the pieces successively liquify and settle down under the influence of the heat generated. As the iron comes to the liquid state around the electrodes, a more stable condition is reached, and an arc is established between each of them, and the molten iron and the two arcs absorb the greater part of the energy.

The alternating current for operation is supplied by a separate power company from their generating station located some distance away, and stepped down at the furnace to the voltage required.

An automatic regulator controls separately the position of each electrode and is designed to maintain the voltage constant between it and the bath. This regulation is effected by means of a small motor placed at the back of the furnace, and geared to the mechanism supporting the electrode, so as to raise or lower it as required, depending on the direction of rotation. The operation of the motor is in turn controlled by an electrical mechanism actuated by variations of the voltage below or above predetermined limits. In the early part of the heat, when the current fluctuates violently, or when tilting the furnace to scrape off the slag, and the arc is likely to be short-circuited, the regulating mechanism may be switched out of circuit and the motors controlled by hand to obtain quicker operation.

The following readings of the electric input were taken on the regular switchboard instruments. The amperes were read on two ammeters connected in parallel.

TIME. Feb. 11th.	Volts.	AMPERES.			Kilo-volt Amperes. (Calibrated.)
		Meter No. 1	Meter No. 2	Total	
A.M.					
7.00	118	1800	2000	3800	448
7.10	115	1700	1800	3500	402
7.20	120	1800	1900	3700	443
7.30	118	1800	1900	3700	436
7.40	127	1750	1850	3600	457
7.50	127	1700	1800	3500	444
8.00	127	1850	1950	3800	482
8.30	128	2050	2150	4200	537
8.50	128	2050	2150	4200	537
11.50	128	2000	2100	4100	525

Mean volts, about	125
Mean amperes, about	4000
Mean kilo-volt-amperes	500

The operator at the generating station stated that the power supplied for the furnace was 450 kilowatts.

During the period of observation, the current varied from about 2,800 to 5,500 amperes, and sometimes from one of these extremes to the other in a few seconds.

Facilities were not available for making a full investigation of this plant, and the above figures are only to be accepted as approximate, but they will give an idea of the electric input required by the furnace, and of the conditions of its operation. A more complete investigation was made of the similar furnace at La Praz, France, which follows.

La Praz, France.

The La Praz plant was investigated by the Commission March 5th and 6th.

The furnace here is similar to the one at Kortfors, except that it is a little smaller and does not have all of the improvements embodied in the latter. The description of the Kortfors furnace, already given, will apply equally well to this one and will not be repeated.

Alternating current is used and is generated directly on the alternator at 110 volts. The alternator has 16 poles, and operates at 250 revolutions per minute, giving a periodicity of 33 cycles. It is a revolving field machine, with horizontal shaft, and is direct connected to its water wheel.

The water wheel is operated with partial gate opening at the beginning of the charge to limit the output of the alternator during the period when the current fluctuates violently, but when conditions become more stable, it is given full gate opening, and the alternator operates at full load through the remainder of the run. When the furnace is tilted to scrape off the slag, the current is taken off, and again applied as soon as this operation is completed.

The electrical readings were taken on the regular switchboard voltmeter and kilowatt-meter, for which no calibration could be obtained. There was no ammeter in circuit, hence, no determination of the current input or of the power factor could be made.

The following readings were taken:—

Charge No. 658, March 5th. To obtain dead soft steel:—

Time.	Volts.	Kilo.-watts.
P.M.		
7.45	110	200
7.50	115	220
9.00	....	350
9.30	110	330
10.00	108	360
10.30	107	360
11.00	108	360
11.30	105	350
12.00	105	360

Beginning of run partial gate opening, p.m.	7.45
Full gate opening, p.m.	9.00
End of run, a.m.	12.15
Length of run, total hours	4½
Mean voltage	108
Mean kilowatts, partial gate opening	210
Mean kilowatts, full gate opening	353
Total kilowatt hours	1410
Mean horse power, full gate opening	480
Total horse-power hours	1920
Total horse-power years	0.219
Output of ingot (obtained from Mr. Harbord) kgs.	1283
Horse-power years per ton of ingot	0.17
Cost of electric energy per ton of ingot, at $10 per horse-power year	$1.70

Charge No. 660, March 6th. For tool steel, standard product:—

Time.	Volts.	Kilo.-watts.
A.M.		
11.45	120	220
12.00	120	200
P.M.		
12.15	115	225
2.45	110	340
3.45	108	350
4.15	107	340
4.45	107	340
5.15	105	340
5.45	110	340
6.15	110	330
6.45	110	340

Beginning of run, partial gate opening, a.m.	11.40
Full gate opening, p.m.	12.45
End of run, p.m.	7.40
Length of run total hours	8
Mean voltage	110
Mean kilowatts, partial gate opening	215
Mean kilowatts, full gate opening	340
Total kilowatt hours	2580
Mean horse-power, full gate opening	462
Total horse-power hours	3500
Total horse-power years	0.4
Output of ingot (obtained from Mr. Harbord) kgs.	2341
Horse-power years per ton of ingot	0.17
Cost of electric energy per ton of ingot, at $10 per horse-power year	$1.70

In the above figures of energy consumed, the short periods have been neglected, during which the current was taken off to remove the slag.

Charge No. 660. For structural steel.

Mr. Héroult stated that this charge was ready to cast for structural steel at 5 p.m., the remainder of the time being required to purify the metal for the higher grade product. This would give the following figures on the production of structural steel:—

Length of run, total hours	5⅓
Mean kilowatts, partial gate opening	215
Mean kilowatts, full gate opening	342
Total kilowatt hours	1680
Mean horse-power, full gate opening	465
Total horse-power hours	2285
Total horse-power years	0.261
Output of ingot, kgs	2341
Horse-power years per ton of ingot	0.111
Cost of electric energy per ton of ingot, at $10 per horse-power year	$1.11

The output of ingot is assumed to be the same as obtained as tool steel, but would, in fact, be somewhat greater, as a percentage of the steel is lost in the various slags taken off.

The above figures are for the energy actually consumed during the run, but the furnace is operated with partial load a part of the time, and also a certain amount of time is lost between runs, which has been estimated roughly at 1½ hours. These facts must be taken into consideration in getting the output of a given furnace, and also of the electric plant, except in case current is supplied to a number of furnaces through transformers, in which case the periods of the different furnaces may overlap and the electric plant be operated at practically continuous full load, the transformers alone being subject to a loss of time corresponding to that of the furnace.

The violent fluctuations of the current and the liability to short circuits make it desirable to limit the possible current to a moderate overload by suitable design of the alternator or of the transformer, in case one is used.

THE KELLER PROCESS.

This process was operated for the Commission on March 28th. For description, see pages 76 and 77.

In starting operation, a small quantity of iron is introduced, and the current passes through it, making circuit by contacts or arcs, as the case may be, and immediately it has partially reached the liquid state, the necessary materials are added to form a slag on its surface. During this period of formation, the current is subject to violent fluctuations, but when the slag is formed, the electrodes are placed in contact with it and the energy of the current is largely absorbed by its resistance and conditions become much more stable, the furnace operating purely on the resistance principle throughout the remainder of the run.

An alternating current is used, and is supplied at the voltage required direct from the alternator, which, in this case, operated two furnaces connected in parallel. The alternator is of the horizontal shaft revolving field type, having 16 poles, and rotating at about 300 revolutions per minute, giving a periodicity of 40 cycles per second.

The regulation is effected by adjusting the electrodes vertically by hand, thus changing the resistance by varying the thickness of the layer of slag through which the current must pass.

The electrical readings were taken on the regular switchboard instruments, for which no calibrations were obtained. The ammeter was connected to the circuit through a transformer, having a ratio of 100 : 1, and the amperes given in the table are 100 times the scale reading of the meter. Two voltmeters were used, each of which was connected to read the voltage between the bath and its respective electrode, and the readings given in the table are the sum of the indications on the two meters, and represent the volts on the furnace. There was no wattmeter in circuit, hence the watts could not be read, and no determination of the power factor was made. For purposes of calculation, it has been assumed as 0.85, which would appear to be reasonable for a furnace of this construction.

Following are the readings obtained:—

TIME — March 28th	VOLTS. — Hartmann & Braun No. 130282 and No. 70536	AMPERES — Hartmann & Braun No. 73670	TIME — March 28th	VOLTS — Hartmann & Braun No. 130282 and No. 70536	AMPERES — Hartmann & Braun No. 73670
A.M.			P.M.		
10.00	70	1500	2.00	80	2900
10.30	70	2800	2.30	72	3100
11.00	71	3000	3.00	76	3100
12.00	73	3000	3.30	77	2800
P.M.			4.00	75	2900
1.00	72	3000	4.30	72	3000
1.30	73	3000	5.00	70	3000

Beginning of run, a.m.	10
End of run, p.m.	5.30
Length of run, hours	7.½

Mean volts	73.1
Mean amperes	2854
Mean kilo-volt-amperes	208
Total kilo-volt-ampere hours	1560
Power factor (assumed)	0.85
Mean kilowatts	177
Total kilowatt hours	1325
Mean horse power	240
Total horse-power hours	1800
Total horse-power years	0.206
Output of ingot (obtained from Mr. Keller) kgs	1650
Horse-power years per ton of ingot	0.125
Cost of electric energy per ton of ingot, at $10 per horse-power year	$1.25

Summary of Results Obtained for Pig Iron.

IN FRENCH UNITS	Héroult's Process	KELLER PROCESS	
		First Run	Second Run
Total Kilowatt Hours	3280	33700	10840
Total horse power Years	0.51	5.23	1.69
Total output of pig iron in Kgs	969	9868	6692
Kilowatt Hours per ton of pig	3380	3420	1620
Horse Power Years per ton of pig	0.525	0.53	0.25
Cost of electric energy per ton of pig at $10.00 per H.P. Year	$5.25	$5.30	$2.50

IN ENGLISH UNITS	Héroult's Process	KELLER PROCESS	
		First Run	Second Run
Total Kilowatt Hours	3280	33700	10840
Total Horse Power Years	0.50	5.15	1.66
Total Output of Pig Iron, lbs	2130	21700	14700
Kilowatt Hours per ton of pig	3080	3110	1475
Horse Power Years per ton of pig	0.47	0.475	0.226
Cost of electric energy per ton of pig at $10.00 per H. P. Year	$4.70	$4.75	$2.26

Summary of Results Obtained for Steel.

IN FRENCH UNITS	KJELLIN PROCESS		HÉROULT'S PROCESS			Keller Process
	Charge No. 546	Charge No. 547	Charge No. 658	Charge No. 660 Tool Steel	Charge No. 660 Structural	
Total Kilowatt Hours....	857.	994.	1410.	2580.	1680.	1325
Total Horse Power Years.	0.133	0.154	0.219	0.40	0.261	0.206
Output of Ingot in Kilograms..............	1030.	955.	1283.	2341.	2341.	1650
Kilowatt Hours per ton of Ingot..............	832.	1040.	1100.	1100.	718.	804.
Horse Power Years per ton of Ingot..........	0.13	0.16	0.17	0.17	0.111	0.125
Cost of electric energy per ton of ingot at $10.00 per H. P. Year.......	$1.30	$1.60	$1.70	$1.70	$1.11	$1.25

IN ENGLISH UNITS	KJELLIN PROCESS		HÉROULT'S PROCESS			Keller Process
	Charge No. 546	Charge No 547	Charge No. 658	Charge No. 660 Tool Steel	Charge No. 660 Structural	
Total Kilowatt Hours....	857	994	1410	2580	1680	1325
Total Horse Power Years.	0.131	0.152	0.216	0.395	0.257	0.203
Output of Ingot in Lbs...	2266	2100	2820	5150	5150	3630
Kilowatt Hours per ton of Ingot...............	757.	947.	1000	1000	653.	730.
Horse Power Years per ton of Ingot..........	0.116	0.145	0.153	0.153	0.10	0.112
Cost of electric energy per ton of Ingot at $10.00 per H. P. Year........	$1.16	$1.45	$1.53	$1.53	$1.00	$1.12

Respectfully submitted,

C. E. BROWN,
Electrical Engineer of the Commission.

Diagram showing the Electrical Connections of the Furnace employed for making Pig Iron at La Praz

Fig. 21

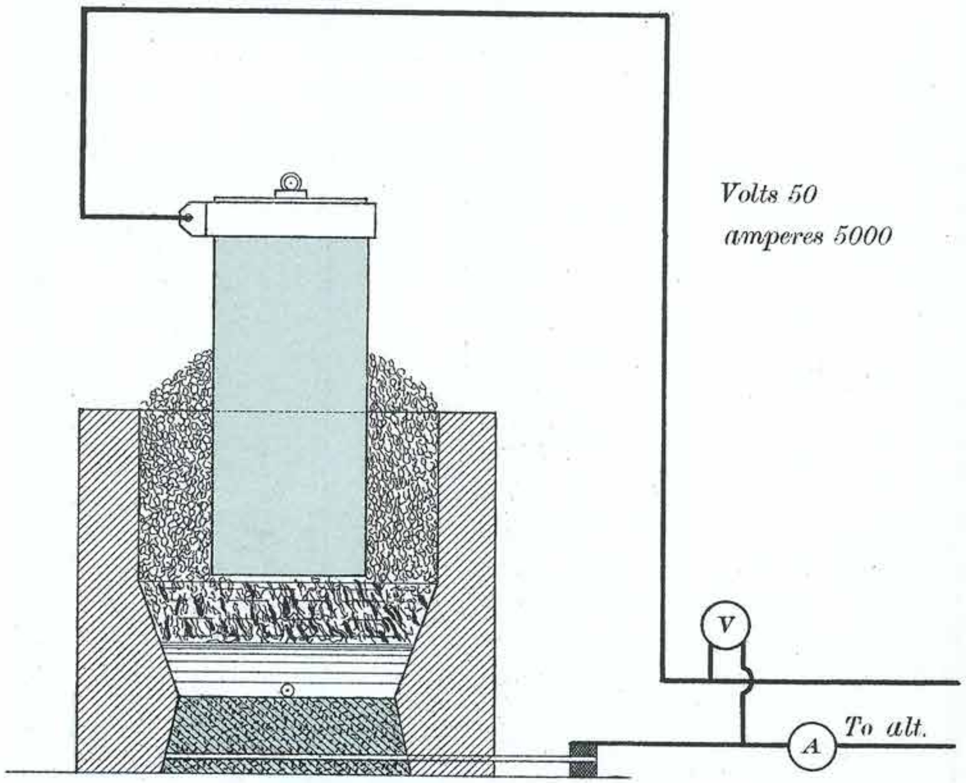

Diagram showing the Electrical Connections of the Keller Furnace with 2 Hearths.

Fig. 22

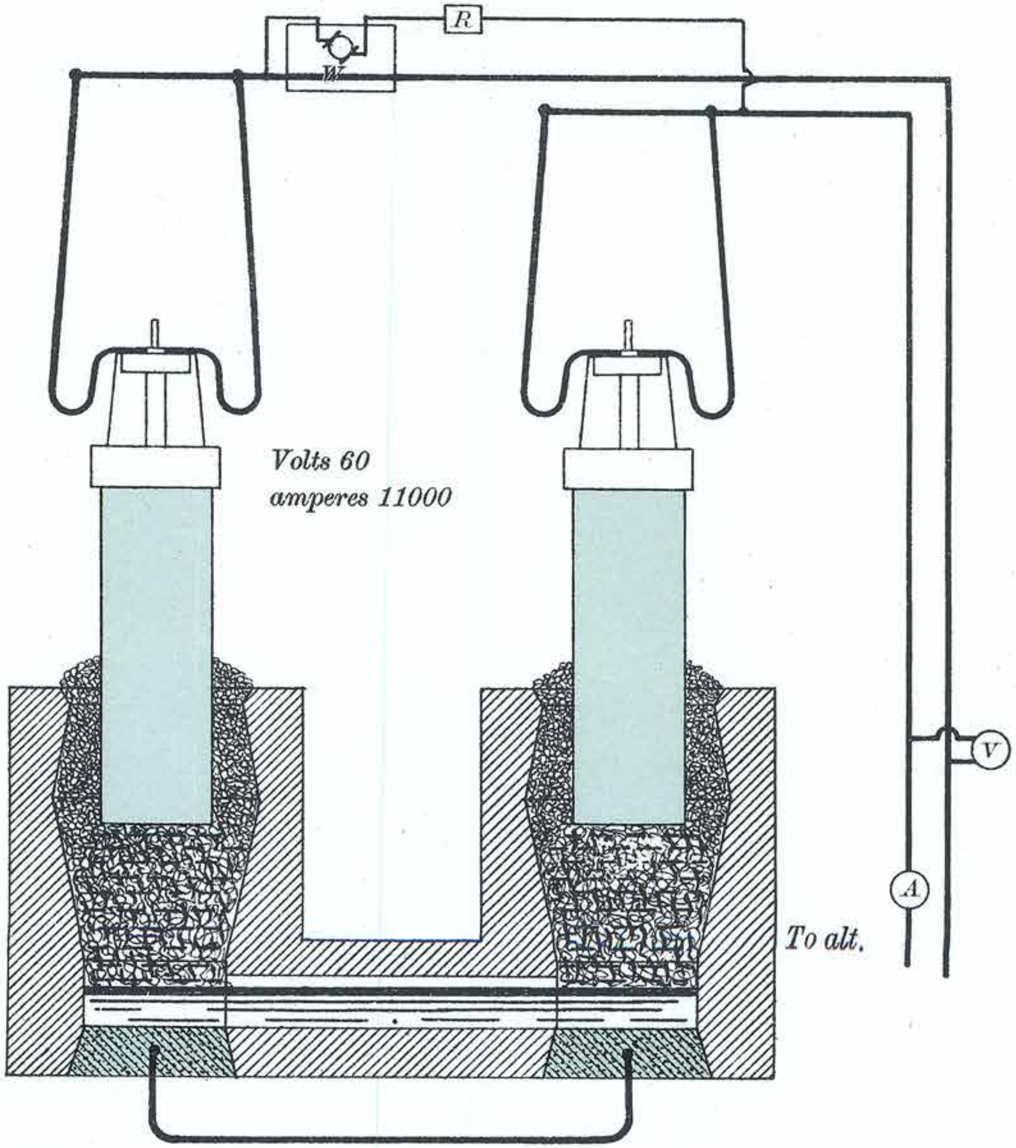

Fig. 23.

STANDARDIZATION OF VOLTMETER 130285

LIVET

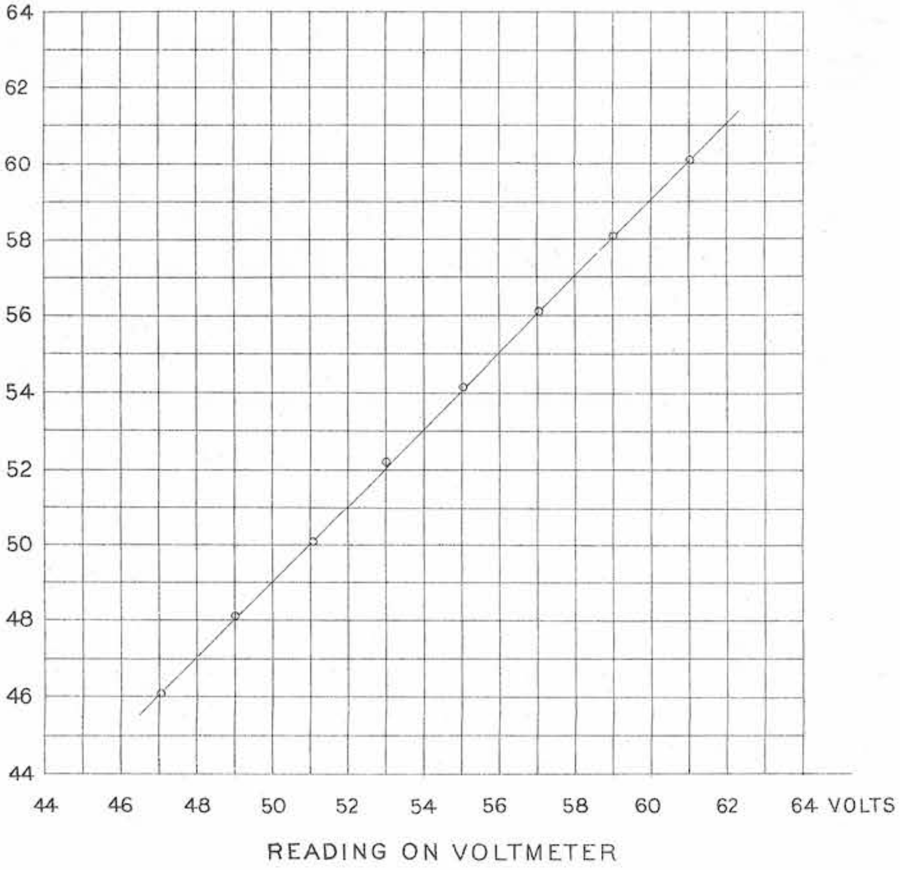

Fig. 24.

STANDARDIZATION OF AMMETER 103137

WITH ITS TRANSFORMER

LIVET

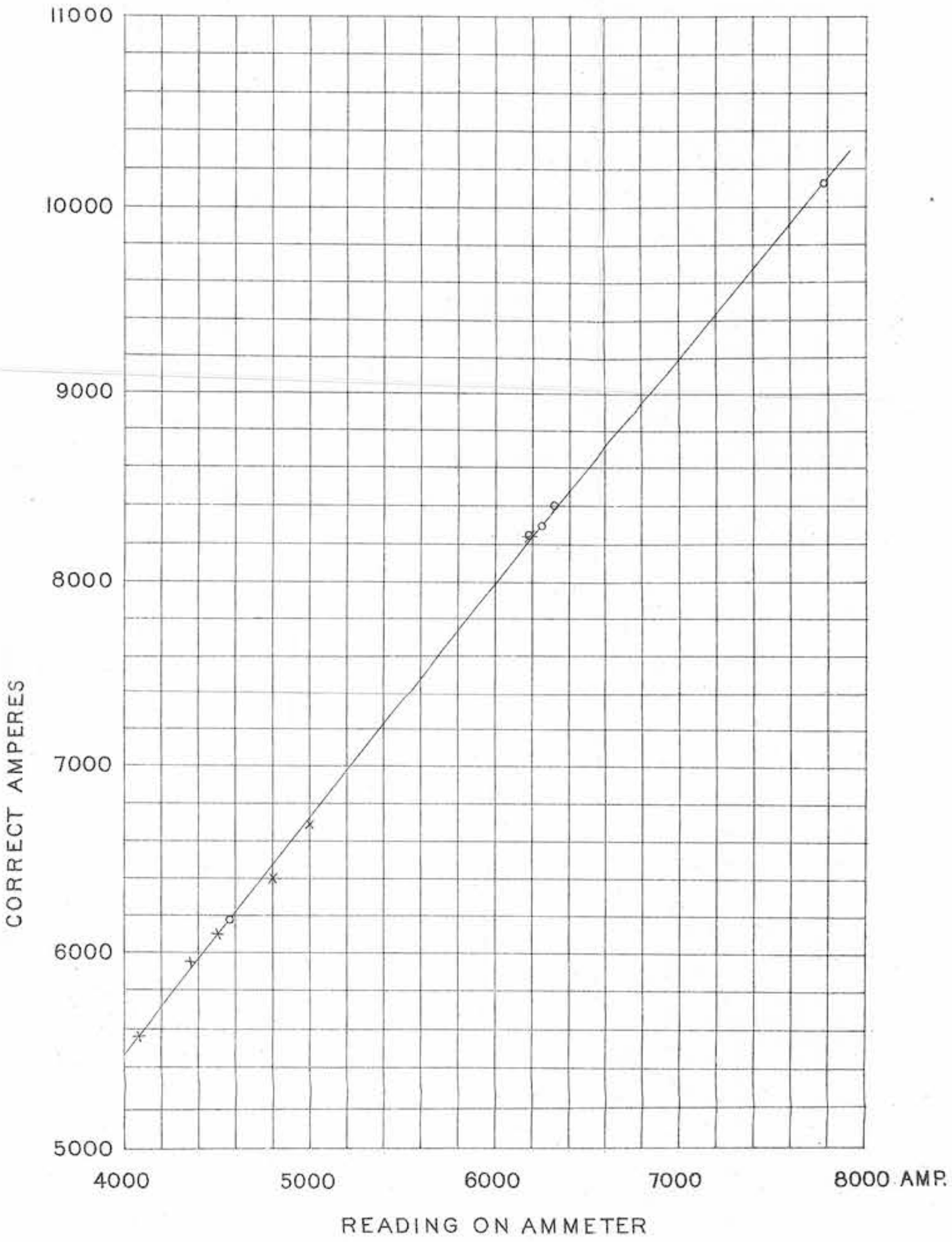

Fig. 25

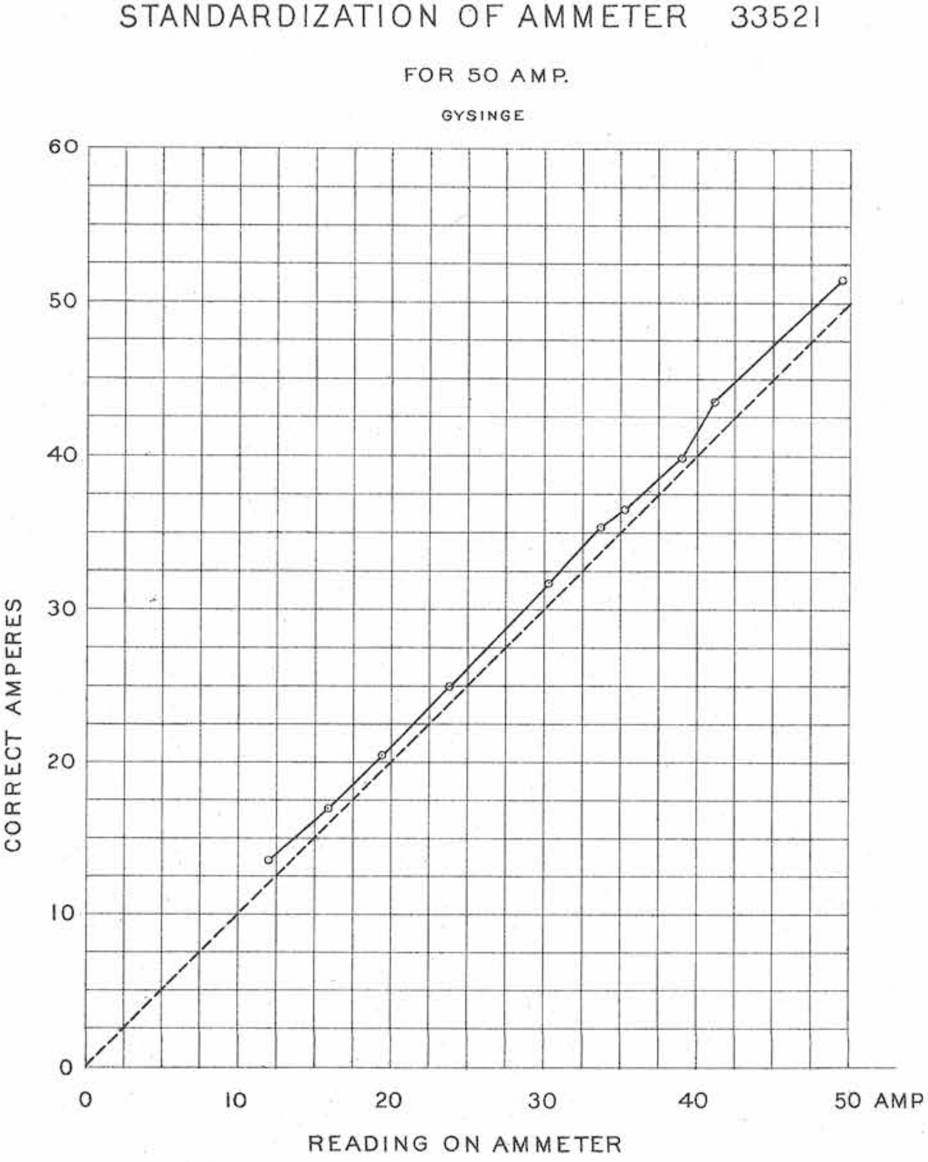
STANDARDIZATION OF AMMETER 33521
FOR 50 AMP.
GYSINGE
60
50
40
30
20
10
0
CORRECT AMPERES
0
10
20
30
40
50 AMP
READING ON AMMETER

Fig. 26

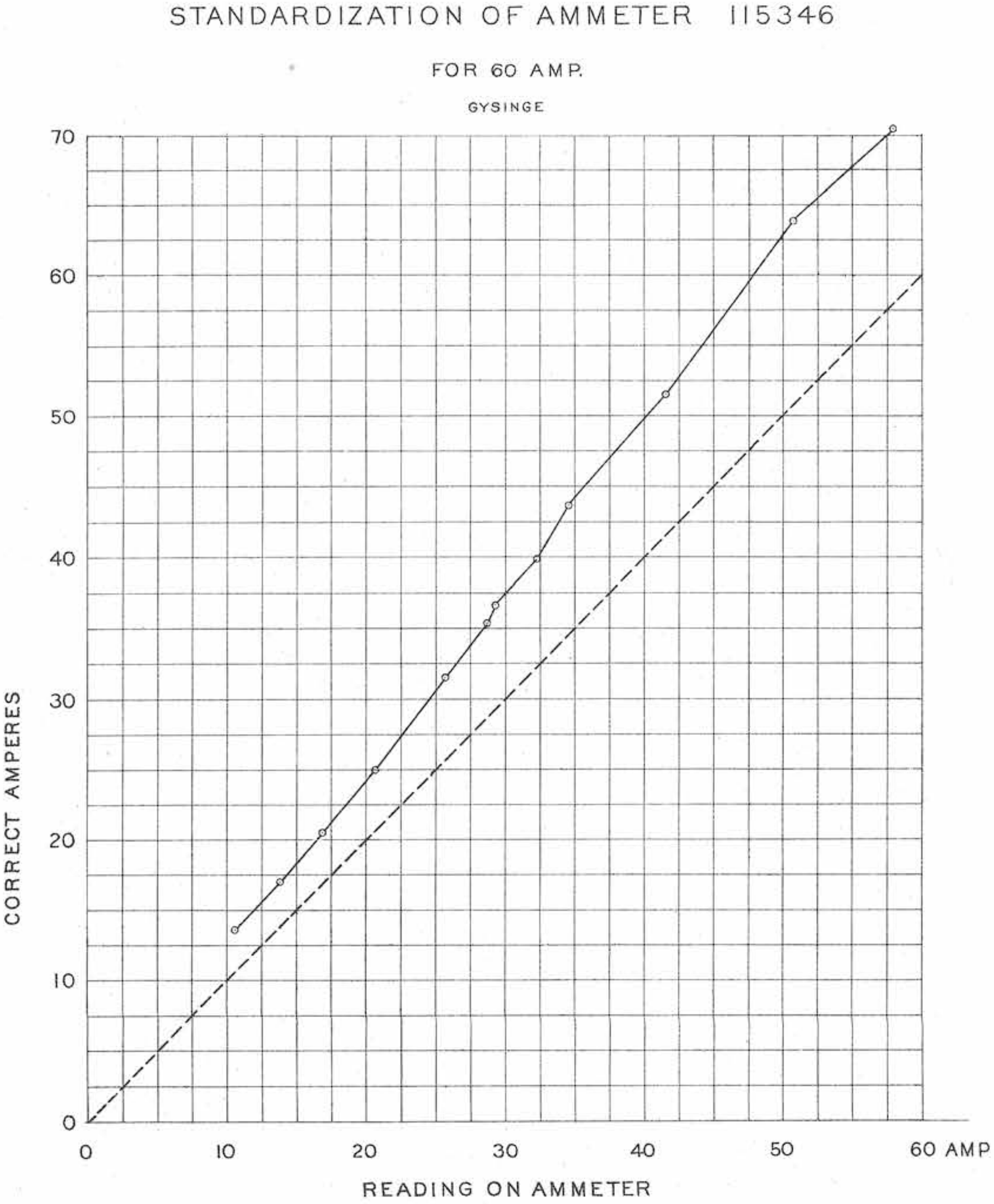
STANDARDIZATION OF AMMETER 115346
FOR 60 AMP.
GYSINGE
70
60
50
40
30
20
10
0
CORRECT AMPERES
0
10
20
30
40
50
60 AMP
READING ON AMMETER

METALLURGIST'S REPORT ON THE ELECTRIC SMELTING OF IRON AND STEEL IN EUROPE.

Englefield Green, Surrey, July 27th, 1904.

Sir,—

I herewith beg to enclose my report embodying the results of my investigations on the electric smelting of iron and steel in Europe.

I remain, Sir,

Yours faithfully,

(Sgd.) F.W. HARBORD.

Dr. Haanel,
Director of Commission on Electric Smelting,
Ottawa.

KJELLIN PROCESS.

The first process investigated by the Commission was the Kjellin process at Gysinge, in Sweden.

This process is especially adapted to the manufacture of high class tool steel from pure pig and scrap and in its present form cannot compete with the Siemens or open hearth process for the manufacture of structural steel.

The furnace employed is an induction furnace, in which the contents in the hearth or crucible form the secondary circuit of a transformer, the primary circuit being formed by a coil of thin insulated copper wire, with a laminated core. When an alternating current is passed through the coil it excites a varying magnetic flux in the core, and the intensity of the current induced in the steel is then almost the same as the primary current multiplied by the turns of wire in the primary coil. The tension of the current is naturally reduced in almost the same ratio as the intensity is increased. In this way it is possible to use an alternating current generator of high tension, and yet (without using the transformer, with copper cables of large sections and powers or electrodes) to obtain a current of low voltage and great intensity in the furnace. In figures 1 and 2 is a plan and a transverse section of the furnace through the tap hole. The furnace was basic lined. Either dolomite or magnesite bricks can be used.

We arrived at Gysinge on Sunday evening and the first experimental charge was made on Monday, Mr. Brown, the electrician accompanying the Commission, having in the meantime connected the instruments for controlling the consumption of electric energy.

First Experimental Charge No. 546.

It was arranged that the first charge made should be a high carbon steel containing about 1.0% of carbon.

We commenced to charge at 11.45 a.m. and the following is the composition of the charge and analysis of materials used. The pig iron was the best Dannemora, and the bar scrap Walloon iron.

NOTE.—All figures in this report relating to the consumption of electric energy were supplied by Mr. Brown, the electrician accompanying the Commission.

Composition of Charge.		Composition of Pig Iron and Scrap Employed.			
Charge No. 546.		*Best Swedish Pig Iron.*		*Walloon Bar Iron.*	
	Kgs.		%		%
Pig iron (white)	300	Carbon	4.400	Carbon	0.200
Steel scrap	125	Silicon	0.080	Silicon	0.030
Bar scrap	600	Sulphur	0.015	Sulphur	0.003
Metal in furnace, estimated	700	Phosphorus	0.018	Phosphorus	0.009
Silicon pig, 12%	30	Manganese	1.000	Manganese	0.120
Ferro-manganese, 80%	1	Copper	0.015	Copper	0.008
		Arsenic	0.035	Arsenic	0.035
Total charge	1,756				
Less metal in furnace	700				
Weight of charge	1,056				

The steel scrap was from previous charges and contained about 1.0% of carbon. Only a part of the materials was charged at the commencement, but as the charge melted, further additions of pig iron and scrap were made. The bar scrap iron was more or less rusty, and consequently had some oxydizing action upon the impurities in the pig iron; as the furnace is never completely emptied, the slag from previous charges gradually accumulates, and is removed in small quantities, from time to time, from the top of the bath of metal. About 7 kgs. of slag, somewhat ferruginous, were removed during the working of this charge. Assuming that no oxidation had taken place during melting, the steel should have contained about 1.40% of carbon, but owing to slight oxidation, the actual percentage was 1.082.

When the entire charge was melted, the current was continued until the temperature of the bath had acquired the necessary temperature for tapping, and the steel was then tapped into a ladle in the usual way and cast into ingot moulds. This charge was tapped at 5.45 p.m., the time taken for the working of the charge being 6 hours. The metal ran from the ladle quite freely and no skull was left behind. It was very quiet in the ingot moulds, and the weight of ingots was 1,030 kgs., or 2,271 lbs. Approximately, 700 kgs. were left in the furnace, the furnace men having instructions always, as far as possible, to leave the same quantity in the furnace. To arrive at an accurate yield, it would be necessary to take a series of charges extending over several weeks, as the amount of metal left in the furnace might vary slightly, but assuming that the same quantity of metal was left in as was estimated to be in on commencing to charge, we have 1,056 kgs. of material required to produce 1,030 kgs. of steel, equivalent to 2,053 lbs. of materials, to produce 1 ton (2,000 lbs.) of steel ingots.

The ingots were 4 in., 5 in. and 7½ in. square and one of the small ingots selected by me was forged down in my presence to 1¼ bar and tested for welding by the drift test with most satisfactory results. The remainder of this bar was stamped with my private stamp and forwarded to Cooper's Hill for mechanical testing and for forging into tools for comparative tests with high-class crucible steels. The results of all these tests will be found in Tables Nos. I and VI.

The total amount of energy consumed during the working of this charge was 857 kilo-watt hours, equal to 0.133 electric H.P. years, or 0.130 H.P. years per 1,000 kgs. of steel produced, equivalent to 0.116 E.H.P. years per ton.

Drillings were taken from three 5 in. ingots and one 7½ in. ingot at top, centre and bottom, and reserved for analysis; the results are given on page 68, under analytical results.

SECOND EXPERIMENTAL CHARGE No. 547.

As it was important to determine how far it was possible to make steel of any required carbon content, I asked Mr. Kjellin to make next a medium carbon steel of about 0.5% carbon.

Composition of Charge.

The following materials were charged into the 700 kgs. of steel remaining in the furnace.

Pig iron	100	kgs.
Bar scrap	825	"
Steel scrap	100	"
Ferro-manganese (80%)	1	"
Silicon pig (12% silicon)	35	"
Weight of charge	1,061	"
Steel in furnace (about)	700	"
Total charge	1,761	"

We commenced to charge at 6 o'clock on Monday evening, and the charge behaved quite normally and was tapped at 12.28 midnight, about 6½ hours from the time of charging. There was rather more slag formed owing to the larger quantity of bar scrap and about 10 kgs. of this were removed during the working. When tapped the metal was not quite so hot as it should have been and it did not leave the ladle as completely as in the previous charge, a skull being left in the ladle weighing about 79 kgs. The metal was fairly quiet in the ingot moulds and the ingots were solid and free from pipes. The weight of ingots and scrap was as follows:—

Ingots	876	kgs.
Scrap	79	"
Total	955	"

Thus, 1,061 kgs. of pig, scrap, &c., were required to produce 955 kgs. of steel ingots and scrap. This is equivalent to 2,222 lbs. of materials for every ton of steel produced. This yield is very much less than on the previous charge, but possibly more metal was left in the furnace, a very slight difference in this respect greatly affecting the results.

One ingot was forged down and four others selected and drilled at top, bottom and centre, as in the previous charge. The forged bars from this charge gave excellent welding results, and the result of the mechanical tests are given in table I.

The total electric energy consumed during the working of this charge was 994 kilo-watt hours, equal to 0.152 E.H.P. years, or 0.145 E.H.P. years per ton of steel.

Third Experimental Charge No. 548.

The last cast of medium steel having been satisfactory, it was decided to make a cast of low carbon (0.20%, or less) steel.

With this object, the following charge, consisting entirely of bar iron, was charged into the furnace, no pig iron, except a little silicon pig at the end of the operation, being added. We commenced to charge at 12.40 midnight:—

Bar iron	900	kgs.
Silicon pig (added at end of operation)	35	"
Ferro-manganese	2.5	"
	937.5	"
In furnace	700.0	"
Total charge	1637.5	"

The charge melted down satisfactorily, but owing to the electric power being limited, it was found to be impossible to get a good tapping heat on the metal, although it was kept in the furnace until 9.5 a.m., i.e., eight hours and twenty-five minutes. When it was tapped it was rather wild, rose considerably in the ingot moulds, and skulled badly in the ladle. Owing to the unsoundness of the ingots and the considerable amount of scrap, it was not possible to get any reliable figures as to yield and this heat was discarded.

Another attempt was made with a similar charge, using a little more pig iron, the furnace being charged at 9.20 a.m. and tapped at 4.45 p.m., but the same difficulty was experienced in obtaining the necessary temperature owing to the deficiency in electric power. The amount of energy consumed was 1204 kilowatt hours, or 68.4 H.P. days, equal to 0.187 H.P. years, and about 1,000 kgs. of metal were obtained, but owing to a considerable amount of scrap it was not possible to get reliable figures as to yield.

Mr. Kjellin being still confident that he could make a low carbon charge successfully, the accumulation of slag in the furnace from the previous charges was removed as much as possible and another charge made consisting largely of bar scrap. This was melted down but the same difficulty was experienced in obtaining a good tapping heat, and the large quantity of slag in the furnace also gave trouble. Finally the heat was tapped at 1.40 a.m., after being eight and a half hours in the furnace. The metal teemed well and was fairly quiet for dead soft metal; but owing partly to a slight accident which delayed the teeming, and partly to the metal not being very hot, after the first four ingots were cast the nozzle closed up and it was impossible to complete the teeming, and the metal had to be poured back into the furnace. The four ingots which were cast were fairly sound, although there was more piping than desirable. These were taken to the forge and drillings taken from top, centre and bottom of each, as in previous charges. One ingot was forged down to 1¼ bar and tested for welding and cold bending and gave excellent results; a portion of this bar was forwarded to Cooper's Hill for mechanical tests, and results are given in table I. In each of these charges a little aluminium was added in the ladle before teeming. The difficulties experienced in making the soft steel were due more to the especial conditions prevailing at Gysinge rather than to any defects in the process itself, and had they had ample power to obtain the necessary heat on the metal soon after it was melted, there would, in my opinion, have been no difficulty in making the low carbon steel. Owing, however, to the deficiencies in power, it was most difficult to obtain the necessary temperature for tapping, in a reasonable time, with the result that the metal was kept in the furnace for from 1½ to 3 hours longer than it should have been, exposed to the action of the oxidising slag. Another difficulty was that the furnace, having been designed especially for the manufacture of high carbon steels suitable for tool purposes, no slag hole for the withdrawal of the slag had been arranged for, as it had been found that in making these high carbon steels the small amount of slag produced could easily be removed through the charging doors. In making the soft steel, however, far larger quantities of slag are produced, and it was not found possible to remove the slag from the top, with the result that considerable difficulty was experienced in producing dead melted metal. Given a furnace slightly altered, so that the slag could be removed from time to time and ample electric power to produce the necessary temperature rapidly, there is not the slightest doubt that dead soft steel could be satisfactorily produced.

As regards the mechanical and working properties of the steel produced, whether high or low carbon, there can be no question that the steel is of the highest quality. The analysis of the three ingots, drilled from the top, the centre and the bottom, when compared with the average drillings, will be seen to be almost identical, showing that there is practically no segregation, and the mechanical and welding properties of the steel are equal to the best.

The results of the experiments at Woolwich Arsenal with tools forged from this material are given in Mr. Donaldson's report, and it will be seen that, speaking generally, they are very satisfactory.

COST OF PRODUCTION.

The cost of production will necessarily vary with local conditions, such as the cost of labour, refractories, electric energy, and pig iron and scrap; and it will be best to consider each of these heads separately.

Labour.—There were five men and one boy employed on the furnace at Gysinge for each twelve-hour shift, and as the output was on an average 3,000 kgs. per 24 hours, ten men and two boys were required to produce 6,615 lbs. of steel. The wages paid are much lower than would be paid in England or Canada, and a correction must consequently be made for this, according to the price of labour in the particular place, but the number of men employed will be the same.

The actual wages paid at Gysinge are as follows:—

	Kr.
2 foremen, one on each shift, at 3.25 kronor per day of 12 hrs......	6.50
2 ladlemen, one on each shift, at 3.0 " "	6.00
2 helpers, one on each shift, at 2.60 " "	5.20
4 helpers, two on each shift, at 2.40 " "	9.60
2 boys, one on each shift, at 1.70 " "	3.40
Total for 3,000 kgs. of steel ingots............	30.70

At 18 kronor to the £1, this is equal to 33*s.* 6*d.* for 3,000 kgs. Converted into dollars and cents, and short tons of 2,000 lbs., we get $2.40 as the labour charges per ton of ingots produced. These will not in any way represent the Canadian or English wages, which for the same number of men would probably be between two and three times as much.

Pig Iron and Scrap.—The actual cost of these materials will vary within very wide limits. In Sweden, at the blast furnaces, the cost of pig iron of best quality will probably not exceed $30 per ton of 2,000 lbs., and a limited amount of Walloon scrap, suitable for remelting but unsuitable for export, can also be obtained at about the same figure. In the case of other countries, however, Walloon bars at full market prices would have to be bought and cut up for remelting and the market price of these would be very high. The price of raw materials may be taken to be the same as would be paid for similar materials for the manufacture of the best quality of high carbon crucible steel, at the particular place of manufacture. This process offers no advantage over the crucible process as regards the cost of materials, as only the highest quality of scrap can be used, the points in its favour being the reduced cost of melting and the larger output. The following may be taken as a typical or average charge to produce 1 ton of ingots:—

	Lbs.
Best pig iron	600
Best Walloon bar scrap	1,200
Best tool steel scrap	188
Silicon pig iron (12% silicon)	60
Ferro-manganese (80%)	2
Total weight to produce 1 ton	2,050

Refractory Materials and Repairs.—It was impossible to determine the cost of repairs during the short time we were at Gysinge, but Mr. Kjellin very kindly gave me the figures from the works' books, extending over a period of 10 weeks, during which 309 tons of ingots were made. These, including the cost of cutting out old lining, relining furnace, all refractories and labour charges, came to 60 cents per 1,000 kgs., equivalent to 54 cents per ton (2,000 lbs.) of ingots produced. The details were as follows:—

	Kr.
Wages for cutting out old lining	50
Refractory materials (magnesite)	383
Wages for relining	70
Daily repairs, over 10 weeks' work	128.25
	631.25

631.25 kr. equals 700s., or $168 for 309 tons.

Electric Energy.—The cost of this will vary at every power station, but for the purposes of these calculations the cost is assumed at $10 per E.H.P. year. In the three charges in which the consumption of energy was determined by Mr. Brown it cost on this basis 1.30, 1.60 and 1.87 dollars per 1,000 kgs. of ingots, or an average of 1.56 dollars, equal to 1.40 dollars per ton of ingots produced.

Mr. Kjellin kindly gave me the figures from their books showing the electric energy consumed in producing 309 tons of ingots during 10 weeks, or 70 working days. This was 41.3 E.H.P. years, costing 1.48 dollars per 1,000 kgs., or 1.34 dollars per ton. These figures practically confirm those obtained by Mr. Brown in the experimental charges. As would be expected, they are slightly lower, the steel made during this period being almost entirely high carbon steel; whereas, of the three experimental charges, one was medium and one low carbon, and owing to the longer time and the higher temperature necessary, a larger amount of energy was consumed. It is best to assume the cost of materials will be the same per ton as for crucible steel of the same quality, that 2,050 lbs. will be required to produce 2,000 lbs. of ingots, that ten men and two boys will be required to produce 6,615 lbs. of steel, and that repairs will not exceed $1.00 per ton of steel ingots produced. We may take the electric energy at $10 per E.H.P. year to be equal to $1.34 per ton of steel produced.

The coke used in crucible melting in Sheffield to-day probably varies from 2 to 3½ tons per ton of steel produced, and even in the large gas-fired furnaces employed in America and Germany probably 1 ton of slack, costing not less than 10s. per ton, is necessary. The labour charges, costs of pots, &c., will be considerably more than the labour charges and repairs with an electric furnace per ton of steel produced.

Thus, we have the cost of materials approximately the same and a considerable saving in favour of the electric furnace, if we place the cost of electric energy and labour against the cost of fuel and labour in pot melting, even when the latter is carried on under the best possible conditions. The following estimated cost of producing 1,000 kgs. of ingots at Gysinge was given by Mr. Kjellin:—

Materials	$31.66
Wages	2.66
Renewals and repairs	0.60
Electric energy	1.48
Ingot moulds	0.48
Interest and redemption	0.60
Total	$37.48

This is equal to $34.00 per ton of 2,000 lbs.

It was impossible to obtain any absolute figures as to yield from the three experimental charges, as the furnace not being emptied a few kgs. more or less would make a very considerable difference, and without checking a number of charges over a very considerable period reliable results could not be obtained. Mr. Kjellin kindly gave me from his books weights of materials charged and of ingots obtained, during twelve weeks continuous working, which showed that 2,050 lbs. of materials were required to make 1 ton of ingots. To give any estimate as to the cost of labour or materials in Canada would only be misleading.

So far no special alloys for the manufacture of high speed cutting tools have been made at Gysinge, but there appears to be no reason why this should not be done. The furnace is simply a large pot furnace and has the additional advantage that there is not the slightest danger of the steel taking up sulphur during the process of melting, and by making suitable changes steel of any required composition can be made.

So far as we saw the process conducted at Gysinge it was from a metallurgical standpoint similar to the old crucible process, any variation in the finished steel being produced by altering the relative proportions of pig and scrap and little or no purification being effected by oxide of iron. Before our visit experiments had been made in working the furnace with pig, ore and scrap, as in the ordinary open hearth or Siemens' process. Pig iron and Herräng briquettes, containing 62% of metallic iron as ferric oxide ($Fe_2 O_3$) were used in the experiments, and an output equal to about 59% of that when working cold pig iron and scrap was obtained. Mr. Kjellin estimates that with pig iron at $13.00 and ore at $3.00, with a 30-ton furnace of 1,000 E.H.P., he could produce ingots at $18.00 per ton, taking his electric energy at $15 per electric H.P. year.

In my opinion, the furnace would require considerable modifications before it could be conveniently used for the manufacture of mild steel to compete with the Siemens furnace, as the difficulty of removing the whole of the slag, while retaining a small portion of the metal in the furnace, would, I fear, be considerable, and I anticipate that repairs could not be so readily effected if the walls were badly cut by the slag, as in the case of an ordinary Siemens furnace. Mr. Kjellin has, however, shown so much ingenuity in surmounting the difficulties in connection with the manufacture of high carbon steel, that, given the opportunity to experiment with a furnace on a reasonable scale, it is quite possible that he may be able to overcome these difficulties and make the manufacture of mild steel a commercial success. The process, as at present worked, is admirably adapted for the highest class of steel from pure materials and the only objection to it is, that it is limited to these pure materials and can only be used where they are obtainable. I do not think in its present stage of development it is adapted to treat ordinary pig iron and miscellaneous scrap of more or less irregular composition as the complete elimination of any impurities present could not always be relied upon. Under the special conditions existing at Gysinge and in some other places, it is capable of doing most excellent work and is a most efficient and economical metallurgical appliance. There seems no reason why the size of the furnace should not be very considerably increased, whatever difficulties there may be being electrical, rather than metallurgical and with furnaces of 5 to 10 tons capacity the labour costs would be very greatly reduced. Five men and one boy could do all the necessary work if they had a little assistance in charging, on a five ton or even a ten-ton furnace without being in any way overworked, and this would at once reduce the cost of labour by nearly five to ten times, according to the size adopted, so that with a fair-sized furnace the cost of labour in Canada, notwithstanding the much higher rates paid, might be actually less than at Gysinge.

The following are the analytical results obtained.

CHARGE 546.

Average Sample. Drillings taken from 4 Ingots.

Carbon	1.082
Silicon	0.194
Sulphur	0.008
Phosphorus	0.010
Manganese	0.240
Arsenic	0.012
Copper	0.031
Aluminium	Trace.

—	Drillings from Top, Bottom and Centre of 7½" Ingot.			Drillings from Three Separate Ingots, Nos. 1, 2 and 3.		
	Top.	Centre.	Bottom.	No. 1 Top.	No. 2 Centre.	No. 3 Bottom.
Carbon	1.083	1.077	1.050	1.086	1.086	1.070
Silicon	0.194	0.205	0.196	0.206	0.204	0.205
Sulphur	0.008	0.010	......	0.009	0.010	......
Phosphorus	0.009	0.011	0.011	0.010	0.011	0.009
Manganese	0.242	0.260	0.250	0.250	0.246	0.250

CHARGE 547.

Average Sample. Drillings taken from 4 Ingots.

Carbon	0.417
Silicon	0.145
Sulphur	0.008
Phosphorus	0.010
Manganese	0.110
Arsenic	0.020
Copper	0.032
Aluminium	Trace.

—	Drillings from top, Bottom and Centre of 7½" Ingot.			Drillings Taken from Three Separate Ingots.		
	Top.	Centre.	Bottom.	No. 1. Top.	No. 2. Centre.	No. 3. Bottom.
Carbon	0.415	0.402	0.391	0.415	0.401	0.403
Silicon	0.160	0.148	0.147	0.148	0.159	0.148
Sulphur	0.009	0.010		0.010	0.009	
Phosphorus	0.011	0.012	0.012	0.010	0.010	0.011
Manganese	0.110	0.106	0.108	0.112	0.110	0.106

CHARGE 550 (Low Carbon).

Average Sample. Drillings taken from 4 Ingots.

Carbon	0.098
Silicon	0.026
Sulphur	0.012
Phosphorus	0.012
Manganese	0.144
Arsenic	0.022
Copper	0.030
Aluminium	Trace.

—	Drillings from Top, Centre and Bottom of 7½" Ingots.			Drillings from Three Separate Ingots.		
	Top.	Centre.	Bottom.	No. 1. Top.	No. 2. Centre.	No. 3. Bottom.
Carbon	0.102	0.105	0.103	0.105	0.101	0.099
Silicon	0.028	0.029	0.030	0.032	0.030	0.026
Sulphur	0.010	0.009		0.010	0.011	
Phosphorus	0.011	0.010	0.012	0.011	0.010	0.012
Manganese	0.142	0.141	0.140	0.138	0.134	0.138

ANALYSES OF GYSINGE STEEL

Received from the Works.

Carbon.	Silicon.	Phosphorus.	Sulphur.	Manganese.
0.91	0.21	0.015	0.011	0.77
0.89	0.21	0.015	0.005	0.30
0.80	0.27	0.015	0.007	0.48
0.63	0.30	0.017	0.008	0.44
0.18	0.12	0.017	0.008	0.17
0.07	0.012	0.013	0.009	0.06

HÉROULT PROCESS.

The next process investigated was the Héroult, and we first visited the works of the Héroult Electric Steel Co. at Kortfors, where the process was in commercial operation. We were not able at these works to make any experimental charges, as they did not wish to interfere with the business routine of the works, but we saw all the details of the operation, and the properties of the steel were demonstrated by various welding and other work tests.

The furnace is similar in general arrangement to the tilting furnace used for the Siemens or open hearth process, except that the gas ports at each end are replaced by charging doors, and the temperature is maintained by carbon electrodes which pass through the roof. The furnace was about 4-tons capacity, basic lined, and the charge was entirely miscellaneous steel scrap. The electrodes were surrounded by water jackets where they passed through the roof of the furnace, and were raised and lowered by automatic electric regulators. The electrodes did not touch the surface of the bath, but were kept just above the slag line. Ore and lime were added from time to time, and the slag removed three times during the melting and a new slag made by further additions of ore and lime, by which means the impurities in the scrap were almost entirely removed. The electrodes were two meters long, and 400 mm. square in cross-section, and weighed 500 kilogrammes. They lasted one week, and the old electrodes were ground up and mixed with 50 per cent of new material. The cost of each electrode was about 60 kronor, or about $16.00. The average make was about 40 tons per week, charges taking about 9 hours each. The charge when finished is not tapped, but poured into the ladle from a spout. As we were not able to investigate the process in detail at these works, no samples were taken and analysis and question of yield were reserved for investigation at La Praz.

LA PRAZ WORKS.

We next visited the works at La Praz, where the process is at work under the supervision of the patentee, M. Héroult.

The furnace was almost identical with that at Kortfors, except that it was somewhat smaller, and the electrodes were not surrounded by water jackets at the junction with the roof.

The usual charge was about three tons, and consisted entirely of miscellaneous scrap, with suitable additions of ore and lime. As in the case at Gysinge, it was arranged to make steel of varying carbon content, and the first charge was a low carbon steel for transformers. As only a small quantity of steel was required, an exceptionally small charge was made. The charge was as follows:—

Charge No. 658.

Miscellaneous scrap	3,307 lbs.
Iron ore	330 "
Lime	246 "

The scrap was charged with some lime and then additions of ore and lime were made from time to time.

When the bath of metal and slag was completely melted, the slag was poured off, great care being taken to remove the slag entirely; a new slag was then made by adding about 55 lbs of lime, 15.5 of sand, and 15.5 lbs. of fluor spar. This was melted and kept in the furnace for some time, when it was poured off as completely as possible, the last traces being raked off the surface through the pouring door. Another addition of lime and fluor spar, &c., in the same proportion as the last, was then made to form a finishing slag to remove the last traces of impurity; about 1.5 lbs. of ferro-manganese was added, and the charge was poured into the ladle, a little aluminium being thrown into the ladle before the metal was teemed into the ingot moulds.

The furnace was ready charged at 7.45 p.m., and the current put on, and it was poured at 12.15; time, 4½ hours. The very short time taken for the operation was due to the smallness of the charge and to the fact that no time was required for recarburizing the very low carbon steel. The steel when teemed ran from the ladle freely, no appreciable scrap being left behind; it was very quiet in the ingot moulds, and the steel ingots were exceptionally sound for steel of this quality. The yield was:—

Ingots	2,820 lbs.
Scrap	9 "
Ingots and scrap	2,829 "

This is equivalent to 2,338 lbs. of scrap for every 2,000 lbs. of steel produced. All the weights were checked by myself. The analysis of the scrap and steel was as follows:—

SCRAP CHARGED.	
Carbon	0.110
Silicon	0.152
Sulphur	0.055
Phosphorus	0.220
Manganese	0.130
Arsenic	0.089

STEEL PRODUCED.	
Carbon	0.079
Silicon	0.034
Sulphur	0.022
Phosphorus	0.009
Manganese	0.230
Arsenic	0.096
Copper	Trace

This was a special steel for transformers, and M. Héroult informed me before it was made that it would not weld, as to obtain the special qualities required for the electrical firms he purposely sacrificed the welding qualities. In other respects the steel gave excellent results; it forged remarkably well, without a trace of red shortness, and gave very good cold bending tests.

The electric energy consumed was 1410 kilowatt hours, equivalent to 0.216 electric H.P. years, equal to 0.153 H.P. years per ton of steel produced.

Charge 660.

This was a charge for a high carbon steel.

The same scrap was used, and the charge was as follows:—

Miscellaneous steel scrap	5,733 lbs.
Ferro-silicon	19 "
Iron ore	430 "
Lime	346 "
Ferro-manganese	3.3"

Commenced to charge at 11.40 a.m., currrent put on at 11.50 but all the current not on till 12.45; tapped at 7.4 p.m.; time, 8 hours.

The scrap and part of the lime were charged before the current was switched on, and the remainder of the ore and lime was added during the melting. After the charge was completely melted, the slag was poured off, great care being taken to remove it as in the previous charge, and a second slag was made by adding 88 lbs. of lime and 22 lbs. of sand and 22 lbs. of fluor spar. This was melted and removed, and a finishing slag formed by the addition of similar quantities of lime, sand and fluor spar. The charge was completely melted at 5.0 p.m., five hours and twenty minutes after charging, and if soft steel had been required, the furnace would have been ready to tap at this time. The bath, however, had to be re-carburized to the required point and this was done by adding in the furnace "carburite," a mixture of pure iron and carbon, until the required degree of carburization was obtained, 19 lbs. of 12% ferro-silicon being also added at the same time. The charge was sampled in the usual way with a spoon ladle, and when the furnaceman was satisfied that the bath contained the required percentage of carbon, the metal was poured into the ladle, a little aluminium added, and the steel teemed into the ingot moulds. The metal ran very freely, leaving no skull in the ladle, was quiet in the moulds, and forged extremely well in the press; the welding tests were very satisfactory. The yield was 5,161 lbs., equivalent to 2,000 lbs. of steel ingots for every 2,230 lbs of scrap and metal charged. The following is an analysis of the steel:—

Carbon	1.016
Silicon	0.103
Sulphur	0.020
Phosphorus	0.009
Manganese	0.150
Arsenic	0.060
Copper	Trace
Aluminium	Trace

The electric energy used during the working of the charge was 2,580 kilowatt hours, equivalent to 0.395 electric H.P. years, equal to 0.153 electric H.P. years per 2,000 lbs. of steel produced.

Had this charge been required for soft steel, it would have been ready to tap at 5 o'clock, when the consumption of electric energy was 1,680 kilowatt hours, equivalent to 0.257 E.H.P. years, equal to 0.100 E. H.P. years per 2,000 lbs. of steel.

It will be noted here that, starting entirely with nearly carbonless scrap iron, the first product obtained is soft steel; to produce high carbon steel this has to be carburized by suitable additions. Consequently, the metal has to be kept longer in the furnace to produce high carbon steel than low carbon steel, and the consumption of electric energy is greater in the former than in the latter case. This is just the reverse of the method of working at Gysinge, where the time taken in producing soft steel is longer than for high carbon steel. The methods of working, however, in each case depend more upon the materials available than any other consideration, and there would be no difficulty in making high carbon steel without recarburizing, by melting down a suitable mixture of pig iron and scrap in the La Praz furnace; and on the other hand, pure scrap could be melted down in the Gysinge furnace and recarburized at the end of the operation, if desired.

COST OF PRODUCTION.

The consumption in electrodes, when working continuously, was 500 kgs. per week, and 50 per cent of old material, costing two centimes per kg., was mixed with 50 per cent of new material, costing 10 centimes per kg., thus costing about 30.00 francs for an output of 30 tons of steel.

The average output per 24 hours was 4 tons; figures furnished by M. Héroult from his book showed an output of 120 tons for 30 days consecutive work, and he considers that he can make 150 tons in this time. The average time for each charge was nine hours, and there were 5 men employed on the furnace each shift, including the foreman. In these men are included the ladleman and pitmen.

The repairs and renewals are somewhat heavy; burnt dolomite costing 3 frs. per ton of steel produced, magnesite 1.5 frs., and acid refractories, including roof, about 2.5 frs. per ton, making a total of $1.40 per ton for refractory materials.

It is extremely difficult to make a statement showing the cost per ton, as this will necessarily depend upon the price of scrap, labour, and refractories in the district; but as any scrap is suitable for this process, the price of the raw material is never likely to be very high and may as a rule, be taken to be about the same price as pig iron delivered at the same place. In England, the price of common scrap will vary from 45s. to 60s. per ton, but can generally be bought at about 50s.

The cost, as regards materials and labour, will be practically the same as for a gas-fired Siemens furnace of the same size, making similar steel. Any difference in the cost will be due to the cost of electric energy and electrodes, as compared with the cost of fuel. Repairs will probably be higher, but not sufficiently to affect the cost of production. In a small Siemens furnace of this capacity, the fuel consumed would vary from 1,000 lbs. to 1,800 lbs. of *good slack coal*, i.e., small coal, per ton of steel produced. Such coal would probably cost $5.00 to $5.50 per 2,000 lbs., in Canada, and assuming 1,200 lbs. to be used per ton, this would be $3.00 per ton of steel. The cost of electric energy, at $10 per E.H.P. year, would be $1.53, and electrodes are estimated to cost 20 cents, making a total of $1.73 against $3.00, so that there is a balance in favor of electric smelting, assuming the cost of materials and labour to be the same.

I think, however, it would be extremely difficult to make steel of such high quality in a basic gas-fired furnace, as with the greatest care the steel is always liable to absorb some sulphur from the gases, and this has a very serious influence on the working qualities of high-class tool steel. This would especially be the case if the process were conducted on the same lines as to the removal and the renewal of the slag, to eliminate the last traces of phosphorus, and working with ordinary scrap, there seems no doubt that the quality of the steel produced in the electric furnace would be superior.

So far as I am aware, there is no Siemens gas-fired furnace working with *miscellaneous scrap* which is making tool steel of this quality, although it may be possible to do it with specially selected materials. The real comparison, however, should not be made with the Siemens process, but with the crucible process, as it is with crucible steel that electric steel is competing, at all events at present. The advantage in working costs with the electric furnace is so considerable, that under the same conditions as to labour, it should eventually supersede the crucible process, especially as there seems every reason to believe that the special alloy steels now being so largely introduced for high speed cutting tools could be readily made in this furnace.

How far this electric furnace can compete with the ordinary Siemens process under the conditions prevailing in Canada is a much more difficult question to decide, as the cost of production largely depends upon the output, and to get a large output with low labour charges means very large furnaces, as practically a 30 or 40 ton furnace requires hardly any more men than a 3 or 4 ton furnace, provided mechanical appliances are arranged for charging.

The Héroult furnace is extremely well designed, and I see no reason why furnaces up to 10, or possibly 15 tons should not give satisfactory results; but at present I should hesitate to recommend larger furnaces than this. I do not think, therefore, that furnaces of this size could hold their own against gas-fired furnaces of 40 to 50 tons capacity, or against the still larger furnaces of 100 to 200 tons working on the Talbot system, where labour charges are reduced to a minimum. It must also be remembered that in making structural steel in large quantities, pig, ore and scrap would have to be used, as it would not be possible to get sufficient quantities of scrap to supply a large plant. This would take a longer time to convert into steel than scrap charges, and the consumption of electric energy would be greater. On the other hand, the consumption of fuel in the large gas-fired furnaces per ton of steel produced would be less, not exceeding 800 lbs. of small coal, costing $2.00. Taking our electric energy as the same as was found experimentally, viz., 0.153 E.H.P. years per ton, and assuming it was the same for a pig and ore charge in the larger furnace and the cost of electrodes the same, we should have $1.73 for electric energy and cost of electrodes against $2 for fuel, and the larger furnaces would still have considerable advantages in smaller labour charges per ton of steel produced. Notwithstanding the slight advantage shown in the above assumptions in favour of electric energy, I am of the opinion that, although the Héroult furnace is admirably adapted under existing conditions for the manufacture commercially of highest class tool steels, ordnance steels, high-class wire, and similar steels, it cannot at present, under Canadian conditions, compete with the ordinary Siemens process for the manufacture of structural and rail steel.

The following analyses of drillings from different parts of ingots from each charge show that the steel is remarkably uniform in quality and that there is no appreciable liquation.

LOW CARBON.

Charge 658. Average Sample.

Carbon	0.079
Silicon	0.034
Sulphur	0.022
Phosphorus	0.009
Manganese	0.230
Arsenic	0.096
Copper	Trace

—	Large Ingot.			Small Ingot.
	Top.	Centre.	Bottom.	Centre.
Carbon	0.084	0.069	0.068	0.070
Silicon	0.036	0.034	0.038	0.030
Manganese	0.233	0.230	0.240	0.230
Sulphur	0.019	0.020	0.022	0.022
Phosphorus	0.008	0.008	0.009	0.008

HIGH CARBON.

Charge 660. Average Sample.

Carbon	1.016
Silicon	0.103
Sulphur	0.020
Phosphorus	0.009
Manganese	0.150
Arsenic	0.060
Copper	Trace
Aluminium	Trace

—	LARGE INGOT.			SMALL INGOT.		
	Top.	Centre.	Bottom.	Top.	Centre.	Bottom.
Carbon....	1.015	1.016	1.022	1.018	1.013	1.022
Silicon.....	0.103	0.101	0.103	0.098	0.100	0.101
Manganese..	0.144	0.148	0.158	0.151	0.150	0.146
Sulphur....	0.021	0.019	0.021	0.020	....	0.019
Phosphorus.	0.010	0.009	0.010	0.011	0.011	0.010

ANALYSES OF LA PRAZ STEELS

Received from the Works.

Charge No.	C %	P %	S %	Si %	Mn %
193..............	0.65	0.009	0.013	0.14	0.24
194..............	0.85	0.009	0.018	0.11	0.25
195..............	1.05	0.007	0.013	0.12	0.25
196..............	0.90	trace	0.013	0.14	0.25
197..............	0.90	0.009	0.012	0.12	0.25
224..............	1.40	0.007	0.013	0.11	0.26
225..............	0.80	0.011	0.012	0.11	0.27
226..............	1.35	0.010	0.017	0.13	0.27
227..............	1.00	0.017	0.010	0.14	0.27
285..............	0.70	0.012	0.013	0.09	0.20
286..............	0.65	0.009	0.015	0.07	0.17
287..............	0.65	0.009	0.012	0.08	0.17
288..............	0.55	0.010	0.016	0.09	0.18
289..............	0.60	0.010	0.018	0.08	0.17
290..............	0.65	0.011	0.018	0.08	0.17

KELLER ELECTRIC STEEL FURNACE.

The primary object of our visit to the works of Messrs. Keller, Leleux, & Co., at Livet, was not to investigate electric steel manufacture, but the manufacture of pig iron in the electric furnace. We were, however, able to see one charge of steel made from steel scrap and a small quantity of pig iron made in the electric furnace in previous experiments.

Messrs. Keller, Leleux & Co. are not manufacturing steel commercially at their works in Livet and the furnace used for the steel melting has not been designed specially for this purpose, as in the other works we visited, but is a plant arranged for general metallurgical experimental work, and is sometimes used for steel, and at other times for copper, nickel, and other smelting operations. It really consists of two furnaces at different levels, the materials being melted and partly refined in the upper furnace, and then tapped off to the finishing furnace at a lower level. In the particular charge which we saw, the upper furnace was not used at all, as the charge consisted almost entirely of light scrap requiring little preliminary refining, and consequently it was charged direct into the lower furnace and melted there. This furnace is basic lined, and in principle is identical with the furnaces we saw at Kortfors and La Praz, and varies only in details of construction. It is a tilting furnace, mounted on trunions, but the steel, when finished, is not poured off by the spout, but is tapped in the same way as an ordinary Siemens furnace. The tapping hole, instead of being in the centre of one of the longer sides of the furnace, as is usual in ordinary Siemens furnaces, is at one end, a slag spout being fixed at the opposite end. The furnace can be rotated in either direction so that the slag can be poured off at one end and when tapping it can be tilted in the other direction to facilitate the removal of all the metal. There are two electrodes passing through the roof exactly as in the La Praz furnace, and these are suspended just below the slag line; lime and a little iron ore were charged and melted down with the scrap, and when melted the slag was poured off, and a new slag was made by further addition of lime.

The charge consisted of:—

Light scrap	1,500	kg.
Electric smelted pig iron	150	"
Silico spiegel, 46% silicon, 15% manganese	15	"
Silico spiegel, 10% silicon, 50% manganese	9	"
	1674	" = 3691 lbs.

The analysis of the scrap charged, and the steel produced, was:—

Scrap.		Finished Steel.	
Carbon	0.142	Carbon	0.576
Silicon	0.062	Silicon	0.287
Sulphur	0.072	Sulphur	0.055
Phosphorus	0.044	Phosphorus	0.046
Manganese	0.500	Manganese	0.540
Arsenic	0.068	Arsenic	0.050
		Aluminium	trace

The furnace was charged at 11.30 a.m., and tapped six hours later, at 5.30 p.m., the refining not being carried so far as usual, as the Commission were obliged to leave to catch the night train. It is customary to pour off the slag at least twice, but in this case it was only poured off once, so that the dephosphorization was not so complete as usual. It was not possible to forge an ingot down at the works, so that no welding or other tests could be made, and it was not possible to get the exact weight of the ingots produced, but the yield would be similar to that obtained at La Praz. The experiment was really only to demonstrate the working of the process, and it would not be advisable to deduce any figures as to costs from it. The energy consumed during the six hours was 0.203 E.H.P. years.

SUMMARY.

The three processes of electric steel manufacture which the Commission has had an opportunity of investigating are all capable of producing equally good steel and the selection of one or the other would depend upon local conditions.

The Kjellin process is undoubtedly the nearest approach to the crucible process, and given a high-class pig iron and scrap has much to recommend it, a special point being that the operation is conducted in a closed crucible or hearth, and there is no possibility of impurity being introduced by contact with electrodes. Its application, however, is limited, and although some purification can be effected during the melting, the quality of the steel will largely depend upon the raw material being very pure, in the same way, although to a somewhat smaller extent, than in the crucible process. To what extent the phosphorus, &c., can be removed in this process our experiments do not enable us to say, as all the charges we followed were made from purest materials, but the furnace is more suitable for replacing the crucible steel melting than for dealing with miscellaneous scrap and pig iron similar to that used in a basic or acid Siemens furnace.

On the other hand, furnaces of the resistance type, with electrodes, can treat phosphoric scrap and pig iron in the same way as a gas-fired Siemens furnace. The neutral atmosphere and the intense heat which it is possible to obtain enable very basic slags to be used, and the mechanical arrangements allow the ready removal of the slag so that a pure non-oxidizing slag to remove the last traces of phosphorus can be ensured at the end of the operation. This undoubtedly opens a larger field for the resistance furnace, as in many districts common scrap can be obtained at a moderate price, where materials suitable for the induction furnace could only be obtained at a prohibitive price. They are, as regards quality, both able to make highest class carbon steels, but from a practical point of view, the resistance furnace is more adaptable as regards its raw material, and has the advantage of being very similar in general design to an ordinary Siemens furnace, so that so far as the metallurgical operations are concerned, repairs, &c., an ordinary steel smelter could in a very short time manage the furnace as easily as a gas-fired Siemens furnace.

In the present stage of development, neither type of furnace can be regarded as a competitor to either the Siemens or the Bessemer processes for the production of rail and structural steel, and can only compete successfully in the production of high class crucible steel or steels for ordnance and other special purposes made in the Siemens furnace. In cases where very *large* steel castings are required of crucible steel quality, several electric furnaces, working so that they could be tapped into a common receptacle, before pouring the steel into the mould, should give excellent results and be much more economical than the crucible process. Under favorable conditions, electric energy might compete with gas as regards cost, but until it is possible to use furnaces of from 30 to 40 tons capacity, the extra labour charges inseparable from small furnaces will prevent them from holding their own against the Siemens or Bessemer process.

MECHANICAL AND MICROSCOPICAL TESTS.

The tensile tests of both the Kjellin and Héroult steels are given in tables I and II, and as will be seen they are all very satisfactory and are what one would expect from high-class steel containing different percentages of carbon; the maximum stress increases with the carbon to about 0.9%, with a corresponding decrease in elongation and reduction of area. The steels were all heated to a temperature of 600°C., which is below the carbon change point, to remove any stresses due to cold working. It will be noted in the lower carbon steels that the elastic limit is exceptionally high, the ratio of elastic limit to maximum stress being 70% in No. 5 A, 82% in No. 7, (658), and 70% in No. 9 (559).

Automatic stress strain diagrams were taken for all steels, and these are reproduced, Figs. 27 and 28. The experimental charges which were worked in the presence of the Commission are given, and in addition a number of steels selected from the warehouse in each case.

In the case of the Kjellin steels are appended also the results of a number of tests made by the Government laboratory at Stockholm (see tables III, IV and V), which confirm the results obtained at Cooper's Hill.

Photomicrographs of the steels from the special experimental charges are given, and also some photos of the high-class steel for comparison, (see plates XIV-XXII). The structures were quite normal, except that in the low carbon steels, the ferrite areas were exceptionally soft. They presented no special features, and in fact could not be distinguished from crucible steels. It was not considered necessary to give photographs showing the various changes induced by heat treatment, as these were identical with those occurring in ordinary steel.

A photograph of some of the cold bending, welding and drifting tests is also given to show what tests were made (see plate XXIII).

TABLE I.

MECHANICAL TESTS GYSINGE STEELS

R.I.E.C Test No.	Mark on Piece	Description of Sample Received	Description of Ruptured Section		Limit of Elasticity		Maximum Stress		Extension on whole length of 6 ins. and 150 mm. %	Reduction of Area at Fracture %	Ratio of E. Limit to Break %	Yield Point		Distance of Fracture from nearest Gauge Point	Carbon %	Appearance of Fracture
			Area Sq. in.	Form	Tons per Sq. in.	Lbs. per Sq. in.	Tons per Sq. in.	Lbs. per Sq. in.				Tons per Sq. in.	Lbs. per Sq. in.			
43	546	1¼ Round	0.385	◍	29.5	66080	56.93	127523	7.1 7.33	6.8	51.8	31.01	69462	0.0″	.....	Crystalline, feathery
4	547	Round .. Swaged . Bars ...	"	"	18.57	41600	32.14	72000	22.0 22.4	56.12	57.79	20.39	45674	1.75″	......	Silky, without crystals
5	A		"	"	16.23	36355	23.41	52438	23.56 23.80	67.86	69.32	19.48	43636	0.75″	......	" slightly porous at centre
10	0.60	1″ Round Swaged . Bars. ...	"	"	29.87	66918	47.93	107364	15.53 15.86	39.50	62.33	32.47	72732	2.75″	0.600	Dull, without crystals
11	0.70		"	"	28.89	64714	47.10	105504	16 03 16.40	42.08	61.35	31.18	69844	3.0″	0.700	" " "
12	0.80		"	"	33.77	75644	63.28	141748	8.86 8.80	19.49	54.23	35.17	78780	0.8″	0.800	Crystalline, feathery.
13	1.10		"	"	34.42	77100	60.42	135340	10.53 10.33	21.56	56.98	36.03	80708	2.3″	1.100	Dull, slightly crystalline

TABLE II.

MECHANICAL TESTS HÉROULT STEELS

R.I.E.C. Test No.	Mark on Piece	Description of Sample Received	Description of Ruptured Section		Limit of Elasticity		Maximum Stress		Extension on whole length of 6 ins. and 150 mm. %	Reduction of Area at Fracture %	Ratio of E. Limit to Break %	Yield Point		Distance of Fracture from nearest Gauge Point	Carbon %	Appearance of Fracture
			Area Sq. in.	Form	Tons per Sq. in	Lbs. per Sq. in	Tons per Sq. in.	Lbs. per Sq. in.				Tons per Sq. in.	Lbs. per Sq. in.			
6	572	Square Bar	0.385	●	25.33	56738	50.52	112156	11.06 11.26	21.04	50.15	25.98	58196	1.6″	0.95	Crystalline feathery
7	658	Round Swaged Bar	"	"	18.18	40724	22.10	49504	30.83 30.66	72.48	82.28	18.44	41306	2.5″	0.079	Fibrous and silky
8	660	1¼ " "	"	"	25.07	56156	54.60	122304	6.76 6.80	8.60	45.92	25.98	58196	At Gauge Point	1.016	Crystalline feathery
9	559	" " "	"	"	19.48	43636	27.69	62026	22.20 22.20	69.90	70.41	20.13	45090	2.5″	0.127	Fibrous and silky

TABLE III.

Copy of Official Certificate of Results of Mechanical Tests made on Gysinge Steel at Royal Technical Institute for determination of Mechanical Tests, Stockholm.

Sender—Gysinge Works, Gysinge.
Description—10 pieces of turned steel.
Date Received—23rd October, 1903.

Certificate No. 5535.

No.	Mark	Diameter m m	Sectional Area m m²	Elastic Limit		Modulus of Elasticity	Extension at Elastic Limit %	Yield Point		Ultimate Stress		Extension		Contraction %	Distance from nearest Punch Mark m m	Percentage of Carbon by Combustion
				Kg. m m 2	Lbs. sq. in			Kg. m m²	Lbs. per Sq. in.	Kg. m m²	Lbs. per Sq. in.	200 m m %	%			
25364	199	20.15	318.9	43.9	62400	20900	0.210	56.4	80200	96.4	137200	10.5	......	18.4	110	0.91
65	201	20.18	319.8	46.9	66700	20750	0.226	50.0	71120	79.2	112620	7.3	......	34.0	56	1.06
66	207	20.17	319.5	43.8	62300	20660	0.212	50.1	71252	72.4	103000	14.3	......	27.3	91	1.18
67	212	20.13	318.3	36.1	51330	20750	0.174	53.1	75520	89.7	127456	6.4	......	8.1	42	1.38
68	229	20.13	318.3	36.1	51330	20750	0.174	44.0	62590	70.3	100000	7.0	.....	50.2	20	0.89
69	230	20.13	318.3	39.3	55888	20900	0.188	45.6	64848	68.6	97570	8.4	......	55.0	101	0.95
70	232	20.13	318.3	36.1	51330	20990	0 172	44.0	62590	78.9	112224	15.1	......	31.2	43	0.63
71	233	20.12	317.9	47.2	47120	20520	0.230	50.3	71525	89.2	126880	9.5	......	22.6	34	0.80
72	234	20.14	318.6	40.8	58030	21030	0.194	45.5	64710	77.8	110656	6 3	.....	46.0	67	0.91
73	260	20.00	314.2	38.2	54340	20760	0.184	56.7	80640	77.2	109820	0.5	......	0.7	37	2.32

Stockholm, 5th November, 1903.

ROYAL TECHNICAL INSTITUTE MECHANICAL TESTING LABORATORY.

(Sd.) GUNNAR DILLNER.

TABLE IV.

Copy of Official Certificate of Results of Mechanical Tests made on Gysinge Steel at Royal Technical Institute for determination of Mechanical Tests, Stockholm.

Sender—Gysinge Works.
Description—10 pieces of turned steel.
Date Received—23rd October, 1903.

Annealed at about 750° C.

Certificate No. 5536

No.	Mark	Diameter m m	Sectional Area m m²	Elastic Limit		Modulus of Elasticity	Extension at Elastic Limit %	Yield Point		Ultimate Stress		Extension		Contraction %	Distance from nearest Punch Mark m m	Percentage of Carbon by Combustion
				Kg. m m²	Lbs. sq. in.			Kg. m m²	Lbs. sq. in.	Kg. m m²	Lbs. sq. in.	200 mm %				
25375	199G	20.12	317.9	44.0	62579	20850	0.211	51.0	72533	96.3	136960	7.1	......	19.1	44	0,91
76	201G	20.11	317.6	42.5	60439	20240	0.210	51.5	73248	93.5	132832	9.2	.....	14.5	88	1.06
77	207G	20.11	317.6	42.5	60439	21140	0.201	47.2	67128	72.1	102552	16.3	.....	32.7	49	1.18
78	212G	20.11	317.6	42.5	60439	21040	0.202	54.6	77657	92.1	131000	7.6	......	9.8	96	1.38
79	229G	20.12	317.9	33.0	46940	20890	0.158	43.3	61586	93.2	132568	10.0	......	19.9	109	0.89
80	230G	20.13	318.3	36.1	51337	20400	0.177	47.1	66992	91.0	129400	10.5	.....	20.0	36	0.95
81	232G	20.13	318.3	36.1	51337	20870	0.173	40.8	58039	76.0	108000	15.0	......	40.7	58	0.63
82	233G	19.89	310.7	33.8	48076	20860	0.162	48.3	68696	94.9	134848	9.0	......	20.8	57	0.80
83	234G	20.05	315.7	44.3	62999	20510	0.216	50.7	72113	97.6	138880	10.6	......	21.2	46	0.91
74	260	20.09	317.0	41.0	58309	20600	0.199	......	.....	55.4	78800	0.0	....	0.2	99	2.32

(Sd.) GUNNAR DILLNER.

TABLE V.

Copy of Official Certificate of Results of Mechanical Tests made on Gysinge Steel at Royal Technical Institute for determination of Mechanical Tests, Stockholm.

Sender—Gysinge Works, Gysinge.
Description—8 pieces of turned steel.
Date Received—22nd November, 1902.

Certificate No. 4559

No.	Mark	Diameter m m	Sectional Area m m²	Elastic Limit		Modulus of Elasticity	Extension at Elastic Limit %	Yield Point		Ultimate Stress		Extension		Contraction	Distance from nearest Punch Mark in m m	Analysis				
				Kg. m m²	Lbs. sq. in.			Kg. m m²	Lbs. sq. in.	Kg. m m²	Lbs. sq. in.	200 mm %				C	Si	P	S	Mn
21373	1.70%	19.98	313.5	60.6	86184	20850	0.2906	63.8	90740	82.3	117060	3.2	....	...	43	1.80	0.21	0.017	0.017	0.47
74	"	19.99	313.8	60.5	86020	20700	0.2923	62.9	89440	82.4	117160	5.9	....	...	75					
75	1.40%	20.00	314.2	54.1	76944	20770	0.2610	58.9	85200	82.4	117160	7.3	... ..	...	22	1.50	0.25	0.016	0.017	0.52
76	"	19.98	313.5	52.6	74816	20910	0.2516	55.0	78188	79.6	113240	7.7	....	...	79					
77	1.10%	19.99	313.8	46.2	65710	20850	0.2216	55.0	78188	87.5	124320	7.0	....	...	47	1.12	0.22	0.014	0.018	0.40
78	"	19.99	313.8	44.6	63400	20590	0.2166	54 2	70096	87.5	124320	7.5	......	..	59					
79	1.00%	19.98	313.5	36.7	52192	20730	0.1770	47.0	66860	90.3	128380	8.1	....	...	24	1.02	0.22	0 013	0.020	0.37
80	"	19.98	313.5	36.7	52192	20730	0.1770	46.3	65856	90.6	128840	7.0	....	...	96					

(Sd.) GUNNAR DILLNER.

Results of Experiments Made at the Royal Arsenal, Woolwich, to Test the Capabilities of the Steels when Used for Turning.

The tools were all forged the same shape, particular care being taken that the tool angles were the same in each case.

For comparison tests were made with similar tools forged from the best crucible steel used at Woolwich, known as grade " A," and also with tools forged from Mushet's steel. The steel operated upon was untempered gun steel, containing 0.3% of carbon. Mr. H. F. Donaldson, the Chief Superintendent of the Ordnance Factories, Woolwich, under whose superintendence the trials were made, reports that the special steels sent were tried against ordinary Mushet steel, and also against Grade " A " of their ordinary tool steel contract, at a cutting speed of approximately 14 feet per minute. The material was not so good as the Mushet steel, and at a cutting speed of 19 feet per minute was useless, while the Mushet steel was working well within its capacity. As compared with grade " A," the results show that, *speaking generally*, there is little difference between this and most of the steels experimented with. One peculiarity noticed in using the special steel as against the Mushet steel was an exceptional tendency of the steel to build up a false edge from the material operated upon. This was more noticeable as the percentage of carbon decreased, and in one case, in which the carbon was 0.95%, this resulted in the additional force required to remove the material pulling up the lathe. Under identical conditions, grade " A " showed no such tendency to build up a false edge. Although the electrical steels and grade " A," in their general behaviour gave practically the same results, in some cases, although the amount of material removed per hour was the same, the former did not stand up to their work so well as grade " A," owing to the tendency to build up a false edge. If the column in table (VIII), marked " Reasons why Trial stopped," be examined, it will be seen that the tools which show themselves equal in every respect to grade " A," contain over 1.00% of carbon, and the best results seem to be obtained with steels containing from 1.100% to 1.300% of carbon. The detailed results of the trials are given in the table, and with regard to those under the column headed " Time of Run," it must be taken that where the tools ran only a few minutes they were palpably done for, and were accordingly taken out. On the longer runs, the length of run when the material removed per hour is approximately the same does not necessarily mean that when the tool has run half the time it was only capable of doing half the work of grade " A," but that the tool was not behaving so well as the latter, and the run was stopped. In some cases, as will be seen from the table, the run was stopped for convenience, the test being considered to have demonstrated that the tool was behaving satisfactorily, and it was unnecessary to continue the run.

The steels experimented with are good of their class, but it is important to point out, in view of the great improvements which have been made in recent years in the production of high-speed steels, that this class of steel is being very largely replaced by the high-speed steels for turning tools.

Steels forged into turning tools and tested at Woolwich Arsenal:—

TABLE VI.

KJELLIN STEEL FROM GYSINGE.

Tool No. or Reference	Cutting Speed Feet per Minute.	Feed	Depth of Cut	Time of Run Hrs.	Time of Run Min.	Metal removed in lbs. per hour	Material Worked Upon	Carbon
1 20 (1)	14	0.1	0.25	—	60	71.5	*Gun steel	1.20
" (2)	19	0.1	0.25	—	3	—	"	
1.10 (1)	13.5	0.1	0.25	—	10	62.5	"	1.10
" (2)	19	0.1	0.25	—	2	—	"	
1.00 (1)	13.5	0.1	0.25	—	30	59.5	"	1.00
" (2)	19	0.1	0.25	—	2	—	"	
0.90 (1)	14	0.1	0.25	—	10	51.0	"	0.90
" (2)	19	0.1	0.25	—	1.5	—	"	
0.80 (1)	14	0.1	0.25	—	10	52.5	"	0.80
" (2)	19	0.1	0.25	—	1.5	—	"	
546 (1)	14	0.1	0.25	—	60	68.5	"	1.082
" (2)	19	0.1	0.25	—	2	—	"	
Mushet 1¼″ Sq.	14	0.15	0.25	—	40	105.7	"	
"	19	0.1	0.25	—	60	82.75	"	
Grade A (1)	13	0.1	0.25	—	45	62.7	"	1.385
" (2)	14	0.1	0.25	—	60	69.5	"	"
Grade A 1¼″ Sq.	19	0.1	0.25	—	3	62.5	"	"

* 0.3 Carbon untempered.

TABLE VII.

HÉROULT STEELS FROM LA PRAZ.

Tool No. or Reference	Cutting Speed Feet per Minute	Feed	Depth of Cut	Time of Run		Metal removed in lbs. per hour	Material Worked Upon	Carbon
				Hrs.	Min.			
400 H (1)	14	0.1	0.25	—	30	62.5	*Gun steel	1.30
400 H (1)	21	0.1	0.25	—	1	—	"	"
400 H (1)	14	0.15	0.25	—	10	84.0	"	"
400 H (2)	14	0.15	0.25	—	45	82.6	"	"
572 H	14	0.15	0.25	—	17	77.6	"	0.95
660 H (1)	13.5	0.1	0.25	—	10	51.0	"	1.016
" (2)	19	0.1	0.25	—	1.5	—	"	"
Mushet 1¼″ Sq.	14	0.15	0.25	—	40	105.7	"	—
"	19	0.1	0.25	—	60	82.75	"	—
Grade A (1)	13	0.1	0.25	—	45	62.7	"	1.385
" (2)	14	0.1	0.25	—	60	69.5	"	"
Grade A 1¼″ Sq.	19	0.1	0.25	—	3	62.5	"	"

* 0.3 Carbon untempered.

TABLE VIII.

Tool No. or Reference	Reason trial Stopped.	Remarks.
1.20 No. (1)	At the end of one hour's run......E	False edge built up.
1.20 No. (2)	Nose burned and rubbed away...N.E.	Cutting speed evidently too high.
1.10 No. (1)	Tendency to pull up lathe, ...N.E.	False edge causing ragged cut,
1.10 No. (2)	Nose of tool rubbed away ......N.E.	Cutting speed evidently too high.
1.00 No. (1)	End of half hour's run..........N.E.	False edge built up and trial stopped on this account.
1.00 No. (2)	Nose of tool rubbed away......N.E.	Cutting speed evidently too high.
0.90 No. (1)	Tool not standing well........N.E.	False edge built up, might have run a little longer, trial stopped for shop convenience only.

TABLE VIII.—*Continued.*

Tool No. or Reference.	Reason Trial Stopped.	Remarks.
0.90 No. (2)	Nose of tool rubbed away......N.E.	Cutting speed evidently too high.
0.80 No. (1)	Closing time................N.E.	False edge built up. Tool might have gone on some little time longer.
0.80 No. (2)	Nose of tool burned..........N.E	Cutting speed evidently too high.
400 H No. (1)	End of half hour's run..........E.	Tool cutting well and speed raised to next test.
400 H No. (1)	Nose of tool burned..........N.E.	False edge built up. Tool done for, cutting speed too high.
400 H No. (1)	Short trial only to see effect of increased speed..............E.	Tools re-ground and cutting well, end of trial.
400 H No. (2)	Meal time......................E.	False edge built up and lathe overtaxed.
572 H	Pulled lathe up..............N.E.	False edge built up.
546 H No. (1)	End of one hour's run...........E.	False edge built up.
546 H No. (2)	Nose of tool rubbed away......N.E.	Cutting speed evidently too high.
660 H No. (1)	Overtaxing lathe.............N.E.	False edge built up.
660 H No. (2)	Nose of tool rubbed away......N.E.	Cutting speed evidently too high.
Mushet $1\frac{1}{4}''$ sq.	Shop convenience................	Cutting edge good and clean.
Mushet	End of one hour's run............	Cutting well, edge still good.
Grade A No.(1)	Shop convenience................	Cutting well when stopped.
Grade A No. (2)	End of one hour's run............	Cutting well.
Grade A $1\frac{1}{4}''$sq.	Tool done for....................	Edge worn away, cutting speed evidently too high.

NOTE—E means *equal* to our Grade A.
N.E. means *not equal* to our Grade A.

Analysis of Steel, Grade A.

C	Mn	Si	P	S	Cu	Cr	Tgstn
1.385	0.250	0.148	0.017	0.009	0.015	*nil*	*nil*

It is only claimed for the above steels that they are equal to the carbon crucible steels, and the comparison with Mushet's steel was made to see if they were in any way superior to the carbon steels.

The special properties of high-speed tool steels are due to the steel being alloyed with special metals, and to a particular heat treatment, and from a metallurgical point of view there should be no difficulty in making these special steel in the electric furnace.

DIRECT SMELTING FROM THE ORE.

The plant at Gysinge and La Praz was not in any way adapted for direct smelting, the furnaces in both cases being either steel smelting, or steel refining furnaces, and confined exclusively to this. It was only at Livet that we saw direct smelting carried on continuously for some days, on a scale and under conditions which permitted one to form a general opinion as to the commercial possibilities of the process.

DIRECT SMELTING EXPERIMENTS AT LA PRAZ.

At La Praz, although M. Héroult had no furnace specially designed for such a purpose, at considerable inconvenience to himself, he insisted on showing us what could be done in one of his small furnaces, commonly used for the manufacture of ferro-chrome and similar alloys. Only very poor ore, containing 35.5 per cent of iron and a considerable percentage of sulphur, was available, but this was smelted with suitable fluxes, and about 967 kgs. of iron made in about 16 hours. Considerable difficulty was experienced in controlling the grade of the iron, as a lump of reduced iron having become attached to the electrode greatly interfered with the working of the furnace, and prevented the complete reduction of the ore, with the result that white and mottled iron, with a ferruginous slag, were principally obtained during the greater part of the run. It must clearly be understood that this impromptu experiment has no bearing on the economic production of pig iron, and was simply arranged by M. Héroult to demonstrate to the Commission how, even under most disadvantageous conditions, iron ore could be reduced with the electric furnace.

The composition of the ore, which was an odd sample which happened to be at the works, apart from its iron content, was unknown; so that it was impossible to calculate the amount of fluxes necessary to produce a basic slag; it was largely this which delayed and interfered with the operation, as the charge had to be altered two or three times until a slag of approximately the right composition was arrived at by trial.

The original charge was as follows:—

100	kgs.	of ore.
8	"	anthracite.
2	"	lime.
3	"	fluor spar.

During the working, 30 charges of ore, containing 1,062 kgs. of iron.

were made, and 13 taps of metal, together weighing 969 kgs., obtained. The composition of the slag varied considerably, but an average showed that it contained 7.75% of metallic iron. The following is an analysis of the ore used, and of the slag and pig iron produced:—

Ore as Received.		Pig Iron.		Slag.	
Moisture	0.565	Total carbon	1.840	Silica	42.72
Insol. Residue	18.980	Combined carbon	1.225	Ferrous Oxide	9.96
Oxide of Iron—	50.100	Graphitic carbon.	0.615	Alumina	17.43
Alumina not determined.		Silicon.	3.122	Oxide of Manganese.	3.70
Oxide of Manganese	1.490	Sulphur	0.274	Lime	16.92
Lime	3.000	Phosphorus	0.023	Magnesia	9.00
Magnesia	5.480	Manganese	0.210		
Phosphoric acid.	0.020				
Sulphur	0.189				
Loss on ignition	16.540				
Silica	5.46				
Metallic Iron	35.50				

It will be noticed that the pig iron is abnormally high, both in silicon and sulphur; and this is largely accounted for by the acid nature of the slag, and by the high content of sulphur, and low content of manganese in the ore. A good iron ore will contain, as a rule, not more than 0.02 to 0.04% of sulphur, but in this case the sulphur was nearly 0.190%, and about half of this has apparently passed into the pig iron. With such siliceous iron ore, one would have expected that the sulphur would have been low, but the conditions were abnormal, both as regards the composition of the ore and the slag, with the result that we get the curious combination of a pig iron with a very small percentage of carbon, high silicon, and high sulphur.

The fracture of the pig iron was that of a very close-grained grey iron, and the surprising part is that it contains only 1.84% of carbon, so that as regards chemical composition it approaches nearer to that of a silicon steel than pig iron. This pig iron is quite abnormal, and may be regarded as an accidental product, as when working under proper conditions, no material in any way resembling this was produced, as will be seen from the results at Livet. The low percentage of carbon in the pig iron and the large amount of iron in the slag also show that the reducing conditions were very imperfect, owing to insufficient anthracite being mixed with the ore.

DIRECT SMELTING EXPERIMENTS AT LIVET.

The works of Messrs. Keller, Leleux & Co., at Livet, were the only ones visited by us which possessed an electrical installation especially arranged for direct smelting, although the general type of furnace was very similar to that we saw elsewhere used for the manufacture of ferro-silicon or ferro-chrome. The furnaces at Livet are used sometimes for the direct reduction of iron ore, and sometimes for the production of ferro-silicon or ferro-chrome, according to the requirements of the firm at the particular time.

From the diagrammatic sketches (fig. 29) in sectional plan and elevations, it will be seen that two or more ordinary furnaces with vertical electrodes are connected by a central well, and the current flows to and from each furnace through the vertical electrodes a and b. Preferably four hearths are connected, arranged so that the metal, as it is reduced, flows into the central well, from which it can be tapped into pig beds or a ladle to suit the particular requirements. If four hearths (cccc) are used, they can be divided into two groups, which are connected with each other in series, the two hearths forming each group being connected with each other in parallel. In such an arrangement the electric current will be broken during casting, when the well is emptied of its contents, and this would not only interfere with the working of the furnace, but also with the working of the electric generators. To avoid this, the soles of the furnaces are made electrically conductive, and are connected with bars of copper (e), which connect hearths of opposite polarity in the manner shown in fig 29. As the flow of the current through the fused material decreases during casting, it flows through the soles of the hearths and conductors (e), and increases in direct ratio with the fall of the current in the fused mass connecting the hearths; and finally, when the hearth is emptied, the entire current flows through the conductors (e).

After casting the fused metal again collects in the crucible (d), and remakes the broken circuit, so that the current again begins to flow through the fused mass. These short connections prevent any irregularity or great variation in the distribution of the current, and for this arrangement at least two furnaces are necessary. In the event of the metal becoming chilled in the central well, it can be heated by a subsidiary electrode, (h), to the required temperature for casting. The furnace in which the first experiment was conducted at Livet consisted of two hearths connected by a well. Before commencing, it was necessary to place in the current the recording wattmeter brought from Paris by the Commission, and this necessitated considerable alterations, and the furnace had to stand for 12 hours before the connections were re-made. This so chilled the central well that the metal set in the lower portion, and it was impossible to tap it, as the subsidiary electrode for heating it had not been installed. We therefore tapped the two furnaces independently from a tap hole in each, just above the sole of the furnace.

The method of working was as follows. The iron ore, flux and coke, broken so that all would pass through a 1,5 inch ring, were mixed on the floor, and then charged into the furnace in the annular space between the electrode and the walls of the furnace. The heat generated by the current rapidly raised the temperature, and enabled the carbon mixed with the ore to reduce it to the metallic state, and as the temperature rose the metal fused, and collected on the sole of the furnace. It was tapped out about every two hours. Had the well of the furnace been available, the metal would have been allowed to collect in this until it was full, and consequently the tappings would have been less frequent, the frequency, of course, varying with the capacity of the well.

The charging of the furnace was done entirely by hand, the materials being discharged from an overhead staging through a shoot onto the furnace platform, and then charged into the furnace with a shovel. Two men* were able to keep the two furnaces full, the materials being added continuously during the whole process, so that the furnace was always kept full to the platform level. The waste gases were allowed to escape and burn at the top of the furnace and no doubt a distinct economy would be effected if the furnaces were made deeper than those at Livet, so that a longer column of descending materials would be able to absorb more effectually the sensible heat of the gases. There was one experiment made in these furnaces, lasting 55 consecutive hours, and a second lasting 48 hours, in two furnaces similarly designed, but without the well. All the materials were weighed in, and the weights checked by myself or some other member of the Commission, but the amount of material in the furnace and on the furnace platform at the commencement and end of each experiment had to be estimated; this may have given rise to some slight error, either for or against the process. To arrive at absolutely accurate figures it would be necessary to run for several weeks, so as to distribute any such error over a larger output. The pig iron and slag produced were weighed at the end of each day's operation, and as the percentage of iron has been determined in the slag, we have a very good control when this is added to the weight of pig iron obtained. The pig iron was cast in horizontal cast iron moulds similar to those used for ferro-silicon. The following are the analyses of the ore, coke, and fluxes used during the experiment:—

	ORE DRIED AT 212°F	ORE AS USED IN THE EXPERIMENTS
Siliceous residue	3.980	3.582
Peroxide of iron Fe_2O_3	77.140	69.416
Protoxide of iron FeO	nil	nil
Alumina	0.600	0.540
Oxide of Manganese MnO	4.600	4.140
Lime	1.300	1.160
Magnesia	0.890	0.801
Sulphuric Acid SO_3	0.057	0.051
Phosphoric Acid	0.027	0.024
Loss on ignition at red heat	11.100	9.990
Moisture		10.000
	99.694	99.704

---

*My recollection is that only one man was employed to charge the furnace.—E.H.

Metallic iron	54.100	Iron	48.690
Phosphorus	0.012	Phosphorus	0.011
Sulphur	0.023	Sulphur	0.020
Silica	3.000	Silica	2.700

Several determinations of the amount of moisture in the ore were made at the works, and these gave an average of 10%. The sample, when examined in London, gave 8.20%, but as a small quantity was taken out of each barrow load charged during the three days' working, and this had to be kept in the works, it would certainly lose some moisture before it was crushed up and placed in an air-tight box for transit:—

COKE		LIME		QUARTZ	
Ash	7.600	Silica	0.625	Silica	78.02
Sulphur	0.538	Lime	98.100	Lime	11.56
Vol. Matter	0.710	Alumina and oxide of iron	0.453		
Fixed Carbon	91.152	Magnesia	0.730		
		Phosphorus	0.007		

The points to which special attention was given during our investigation were:—

1. The output of pig iron for given consumption of electric energy.

2. The yield of metal per ton of ore charged.

3. The quantity of coke required as a reducing agent.

4. The quality of pig iron obtained, with special reference to its suitability—

   (A.) For steel manufacture. (1) Bessemer or Siemens' acid process. (2) Bessemer or Siemens' basic process.

   (B.) Pig suitable for foundry purposes.

FIRST EXPERIMENT.

19th, 20th and 21st March.

We commenced to charge at 4 o'clock in the afternoon of the 19th of March, and the first tap of molten metal was made at 6 o'clock. Afterwards the furnace was tapped regularly at intervals of two hours. The total number of taps was 28, and the experiment was continued for 55 consecutive hours.

The following are the details of the materials charged:—

Weight of mixture in the furnace and on the furnace platform same as 9 subsequent charges.	Weight of each barrow load charged Kgs.	Weight of ore charged Kgs.	Total weight of charge Kgs.
March 19th.... Ore $= \frac{2946 \times 500}{690}$		2134	2946
Charge:			
Ore— 500 1st charge	690		
2nd "	690		
Coke— 100 3rd "	690		
4th "	690		
Lime— 60 5th "	690		
6th "	690		
Quartz— 30 7th "	690		
8th "	690		
9th "	690		6210
Ore = 9 × 500		4500	
March 20th.			
10th charge	690		
11th "	690		
12th "	690		
13th "	690		
14th "	690		
15th "	690		
16th "	690		
Ore— 500 17th "	630		
18th "	630		
Coke— 90 19th "	630		
20th "	630		
Lime— 30 21st "	630		
22nd "	630		
Quartz— 10 23rd "	630		
24th "	630		9870
Ore = 15 × 500		7500	
March 20th.			
Ore— 500 25th charge	620		
26th "	620		
Coke— 90 27th "	620		
28th "	620		
Lime— 30 29th "	620		
30th "	620		3720
Ore = 6 × 500		3000	

	Weight of each barrow load charged. Kgs.	Weight of ore charged. Kgs.	Total weight of charge. Kgs.
Brought forward		17134	22746
March 21st.			
31st charge	620		
32nd "	620		
33rd "	620		
34th "	620		
35th "	620		
36th "	620		
37th "	620		4340
Ore = 7 × 500		3500	
		20634	27086

There remained at the end of the operation on the furnace top:—

3620 kgs. of the ore mixture corresponding to:

$$\text{Ore}: \frac{500 \times 3,620}{620} = 2,919$$

Total weight of ore mixture prepared	27,086 kgs.
Weight of mixture remaining unused at end of operation	3,620 "
Weight of the mixture actually charged into the furnace	23,466 "

These 23,466 kgs. corrresponding to total quantity of

ore = 20634 − 2919 =	17,715
Moisture about 10%	1,772
Remainder dry ore	15,943

Say Fe = 0.541 × 15,943 = 8,625 kgs.

Weight of Metal and Slag Produced.

Dates.	Metal.	Slag.
19th March	2,521	600
20th "	3,991	691
21st "	3,356	734
Total.	9,868	2,025

The first iron made was very grey and siliceous, and gave the following analysis:—

No. 1.

Total carbon	4.00
Silicon	3.72
Manganese	4.10
Phosphorus	0.029
Sulphur	0.007

An average sample taken from all the grey iron made during the three days gave:—

No. 2.

Total carbon	4.200
Combined carbon	0.800
Graphite	3.420
Silicon	1.910
Sulphur	0.007
Phosphorus	0.027
Manganese	4.300
Arsenic	Trace

In a trial previous to our arrival, with the same ore, but with a larger proportion of carbon in the mixture, M. Keller had obtained an iron containing 8.0% of silicon, and 6% of manganese. From the appearance of the fractures of the irons made during the first twelve hours, it was anticipated that they contained far more silicon than they were afterwards found to contain, and it was deemed advisable to alter the ore mixture. This was changed by M. Keller, on the 20th of March, the amount of ore being kept the same, but the coke and fluxes reduced. The iron still being grey, and having a very siliceous fracture, on the evening of the 20th the quartz was removed from the charge to obtain a more basic slag, and on the 21st we began to get a white iron. The furnace worked somewhat cold from the commencement of the experiment, owing, no doubt, to its being greatly chilled by standing for twelve hours while the alterations in the electric connection were made; a somewhat large excess of carbon added led to the production of a considerable amount of free graphite in the furnace, which partly choked it. When, in addition to the coke being reduced on the 20th, the slag was made more basic by the removal of the quartz from the ore mixture, the slag became very infusible, and a white iron was produced, and at night it was decided to stop the experiment. The following is the analysis of the pig iron produced on each day:—

—	NO. 3 GREY IRON Average Sample of Iron made on the 19th and 20th March.	NO. 4 WHITE IRON Average Sample of Iron made on the night of the 20th and 21st March.	NO. 5 WHITE IRON Average Sample of Iron made from the last four Casts on 21st March.
Total carbon	3.930	4.050	4.140
Combined carbon	1.210	3.960	4.020
Graphite	2.720	0.090	0.120
Silicon	1.421	0.699	0.559
Sulphur	0.003	0.007	0.007
Phosphorus	0.029	0.024	0.023
Manganese............	4.000	4.100	3.880
Arsenic	Trace	Trace	Trace

An average sample of the slag taken over the three days' working gave the following analysis:—

Silica	39.02
Iron and alumina	8.04
Oxide of manganese (Mn. O.)....	5.72
Lime	41.80
Magnesia	3.00
Phosphoric acid	Nil.
Sulphur	1.22
Alkalies	Not determined.
Total	98.80
Metallic iron	0.80%

The weight of pig iron obtained was 9,868 kgs., and the electric energy consumed 5.15 E.H.P. years, equivalent to 0.475 E.H.P. year per 2,000 lbs. of pig iron produced, which, at $10 per E.H.P. year, is $4.75 per ton of 2,000 lbs.

The total amount of dried ore charged was 15,943 kgs., containing 54.1% of iron, and therefore the total metallic iron in the charge was 54.1% x 15,943, equals 8,625 kgs.

It is extremely difficult to obtain a sample which will give an average of the impurities in the iron made over a series of small charges, as unless the weight of each sample taken is in exact ratio to the quantity produced, wrong conclusions may be drawn; thus, if a larger piece were taken from the white iron or the grey, this would make the silicon higher or lower, but in view of the fact that about 45 out of the 55 charges were grey iron, and silicon varied from 3.7 to 1.4, the average analysis of the pig iron made may be taken as:—

Carbon	4.100
Silicon	2.500
Manganese	4.300

giving a total of 11.0% of impurities, with the phosphorus and sulphur; therefore, every 1,000 kgs. of pig iron contained only 890 kgs. of metallic iron, so that, theoretically, it was possible to obtain from the ore charged

$$\frac{8625 \times 1000}{890} = 9691 \text{ kgs. of iron.}$$

As the amount obtained was 9,868 kgs., there were 177 kgs. more iron than the quantity charged. It is quite possible that the impurities in the pig iron were more than 11.0% (M. Keller estimated them at 11.5%), and that the amount of material left in the furnace at the end of the operation was slightly over-estimated. In any case the results show that practically all the iron charged was reduced. Converted into tons, we get 10.87 tons, or 21,749 lbs., that is 390 lbs. more than should theoretically be obtained. The complete reduction of the iron is confirmed by the analysis of the slag which weighed 4,465 lbs., and contained 36 lbs. of iron.

Before considering these results, either from a metallurgical or economical point of view, it will be better to give the details of the second experiment.

SECOND EXPERIMENT.

The special object of this second experiment was to confirm the previous results, and also to determine how far the grade of iron could be regulated by altering the ore mixture, or by increasing or decreasing the electric current; in other words, how far the process was under control, and the different varieties of pig required for steel and foundry purposes, varying from 0.5% to 3.0% silicon, could be made as desired.

We commenced to charge at 12 noon on the 23rd of March, and worked until the 25th at noon, 48 consecutive hours. The first tap was made 1½ hours after charging, and there were 32 taps. The furnace used consisted of two furnaces connected electrically, and identical in all respects with the furnace used in the other experiment, except that there was no well, and the connection between the two hearths was by means of a channel at the bottom, through which the current could flow. Each hearth was tapped at the same time, and the metal cast into horizontal iron moulds as in the previous experiment. The following are the details of the charges during the 48 hours working:—

Weight of Materials mixed and taken to Furnace before starting.	Weight of each barrow of mixture. Kgs.	Weight of Ore. Kgs.	Total Weight of Ore Mixture. Kgs.
March 23rd.			
Ore = $\frac{1245 \times 500}{635}$		985	1,245

				Weight of each barrow of mixture. Kgs.	Weight of Ore. Kgs.	Total Weight of Ore Mixture. Kgs.
Brought forward					985	1,245
Charge:						
Ore	525	1st charge		635		
Coke	95	2nd "		635		
Lime	15	3rd "		635		
		4th "		635		2,540
Ore	525	5th "		640		
Coke	95	6th "		640		
Lime	20	7th "		640		
		8th "		640		2,560
Ore 8 × 525					4,200	
Ore	525	9th charge	1330	1330		
Coke	95	9th "	240			
Lime	20	9th "	50			
Fluor spar.	7	9th "	88			1,708
Ore = $\frac{1708 \times 525}{647}$					1,386	
March 24th.						
Ore	500	10th charge		615		
Coke	95	11th "		615		
Lime	20	12th "		615		
		13th "		615		
		14th "		615		3,075
Ore	500	15th charge		622.5		
Coke	102.5	16th "		622.5		
Lime	20	17th "		622.5		
		18th "		622.5		
		19th "		622.5		
		20th "		622.5		3,735
Ore	500	21st charge		627.5		
Coke	102.5	22nd "		627.5		
Lime	25	23rd "		627.5		
		24th "		627.5		
		25th "		627.5		
		26th "		627.5		3,765
March 25th.						
		27th charge		627.5		
		28th "		627.5		
		29th "		627.5		1,882.5
Ore = 20 × 500					10,000	

There remained at the end of the operation 1636 kgs. + 1200 kgs. (in furnace) of ore mixture corresponding to $\frac{500 \times 2836}{627.5} = 2260$ kgs. of ore.

Total weight of ore mixture prepared......	20,511
Weight of ore mixture unused and in the furnace at the end of operation.........	2,836
Weight of ore mixture used.............	17,657

Thus 17675 kgs. correspond to total quantity of ore = 16571 − 2260 = ...	14311 kgs.
Moisture about 7% = ...	1001
Remainder dry ore...................	13310

Say Fe = 0.526 × 13310 = 7.000 kgs. of iron charged.

PRODUCTION.

DATES.	METAL.	SLAG.
March 24th................	3,242	1,405
March 25th................	3,450	1,106
Total.............	6,692	2,511

The ore used was the same as in the first experiment, but on analysis of an average sample it was found to contain about 1.5% less of iron. A determination of the iron and siliceous residue on the dried ore gave the following results:—

Siliceous residue	6.10	%
Peroxide of iron	75.14	"
Protoxide of iron......................	Nil.	
Metallic iron	52.60	"
Silica	4.16	"
Moisture in ore	5.50	"

The moisture in the ore varied very much, some ore being so wet that it was necessary to dry it before charging into the furnace. From determinations made at the works, I consider 7% about the average, as the samples taken during the three days' working would necessarily lose a little moisture, as they were exposed in the works until the whole of the material was charged.

No. 6 Grey Iron

Average Sample from the First Three Casts on 23rd March.

Total Carbon	3.60
Combined Carbon	1.75
Graphitic Carbon	1.85
Silicon	1.95
Sulphur	0.008
Phosphorus	0.027
Manganese	3.120
Arsenic	Trace

No. 7 White Iron

Sample from Each Cast from 6 o'clock on the 23rd to Thursday noon the 24th Mixed to give an average Sample.

Total Carbon	3.030
Combined Carbon	2.700
Graphitic Carbon	0.330
Silicon	0.699
Sulphur	0.157
Phosphorus	0.028
Manganese	1.500
Arsenic	Trace

No. 8 White Iron

Average Sample of the Iron Made from Thursday noon to Thursday midnight.

Total Carbon	3.450
Combined Carbon	3.260
Graphitic Carbon	0.190
Silicon	0.466
Sulphur	0.082
Phosphorus	0.030
Manganese	1.720

No. 9 Mottled Iron

Average Sample of the Iron Made from Thursday 24th midnight to Friday morning the 25th at 10 o'clock.

Total carbon	3.510
Combined Carbon	3.294
Graphitic Carbon	0.216
Silicon	0.722
Sulphur	0.054
Phosphorus	0.029
Manganese	3.300

The following are the analyses of pig irons produced during the experiment:—

No. 10 Grey Iron

Sample of Last Cast Made on Friday noon.

Total Carbon	3.870
Combined Carbon	1.210
Graphitic Carbon	2.660
Silicon	2.230
Sulphur	0.016
Phosphorus	0.031
Manganese	2.590

No. 11 Very White Iron

Taken from Cast at Midnight the 23rd.

Total Carbon	2.720
Combined Carbon	2.560
Graphitic Carbon	0.160
Silicon	0.163
Sulphur	0.250
Phosphorus	0.026
Manganese	0.210

NO. 12 VERY WHITE IRON Sample of the First Two Casts after Midnight 23rd of March.		NO. 13 GREY IRON Taken at 2 O'Clock on the 25th, the first tap after Experimental run Finished.	
Total Carbon	2.850	Total Carbon	
Combined Carbon	2.720	Combined Carbon	
Graphitic Carbon	0.130	Graphitic Carbon	
Silicon	0.180	Silicon	2.160
Sulphur	0.250	Sulphur	0.025
Phosphorus	0.027	Phosphorus	0.027
Manganese	0.140	Manganese	

A piece of slag was taken from each cast and the whole mixed together to give an average sample. The analysis was as follows:—

Silica	39.140%
Oxide of iron and alumina	11.380
Oxide of manganese	12.070
Lime	32.400
Magnesia	2.800
Phosphoric acid	Nil.
Sulphur	1.056
Alkalies	Not determined.
Total	98.846
Metallic iron	1.200

When the very white iron was being made, the slag was of a very dark colour, and a sample of this ferruginous slag gave, on analysis:—

	%
Iron	3.05
Silica	45.22

On comparing the above slag with the average sample from the first experiment, it will be noted that it is far less basic, the percentage of lime and alumina being much lower, and in the case of the ferruginous slag, the silica much higher.

The weight of pig iron produced was 6,692 kgs., and the electric energy consumed 1.66 E.H.P. years; equivalent to 0.226 E.H.P. years per ton of 2,000 lbs. of pig iron.

On reference to the details of charge in the second experiment it will be seen that the total amount of dried ore charged was 13,310 kgs., containing 52.6% of iron, therefore, the total amount of metallic iron in the charge was 52.6% x 13,310, equals 7,000 kgs.

As the greater portion of the iron made was white iron, the silicon, carbon, manganese, &c., were very low, the silicon, with the exception of the first three casts and the last cast, never exceeding 0.722%, and for a considerable number of casts being about 0.180%. We may, therefore, assume that the average composition of the pig iron made during the experiment would be as follows:—

	%
Carbon	3.00
Silicon	0.70
Manganese	1.50

giving a total of 5.20% of impurities; therefore, every 1,000 kgs. of pig iron contained only 948 kgs. of metallic iron, so that, theoretically, it was possible to obtain from the ore charged $\frac{7000 \times 1000}{948} = 7384$ kgs. of iron.

The actual amount obtained as pig was 6,692 kgs., and about 30 kgs. passed into the slag, which leaves 662 kgs. unaccounted for. During the experiment, to improve the working of the furnace, side plates to increase the height of the furnace were fastened on, and this made it extremely difficult to estimate the amount of ore mixture left in the furnace. During charging a certain amount of the material fell to the ground between the staging and the furnace and it was impossible to recover this while the furnace was in operation. The ore, &c., &c., was conveyed to the furnaces by overhead shoots, and there were no means of getting barrows on to the furnace platform to remove the unused material and weigh it, so that this had to be estimated at the end.

It is probable that the low yield in this experiment is due to underestimating the materials on the platform and in the furnace at the end of the experiment, in the same way as the higher yield in No. 1 experiment was probably due to over-estimating the unused ore mixture. To arrive at accurate figures, it would be necessary to run for several weeks continuously, so that errors of this kind could be distributed over a considerable output. If the two experiments are taken together, the amount of iron unaccounted for is less than 3% of the total iron charged, and as the conditions were such that volatilisation was out of the question, there seems no doubt that in the production of white iron the whole of the oxide of iron charged, except the small quantity found in the slag, was reduced; and that when producing a similar class of iron the reduction in the electric furnace is as complete as in the blast furnace.

EXPERIMENT WITH CHARCOAL.

After the second experiment was finished, a few charges were made in which the same ore mixture was used, except that the coke was replaced by charcoal. These charges, however, did not work very satisfactorily, as owing to the ease with which the charcoal oxidized, a large portion burnt away on the top of the furnace, long before it got anywhere near the zone of reduction of the furnace. M. Keller is of the opinion that charcoal could be used provided it were first briquetted with the ore, and the briquette broken up the size of one-inch cubes. I agree with him that probably charcoal could be used in this way, and in all probability, if thus intimately mixed with the ore, there would be comparatively little loss by oxidation on the top of the furnace, and the charcoal would do the work of reduction efficiently in the furnace.

QUALITY OF THE IRON.

The greater part of the iron made during the first experiment was very grey, and contained a considerable percentage of both silicon and manganese. Some of the casts towards the end of the experiment were white iron low in silicon, but contained a very considerable percentage of manganese. All the iron made was low in phosphorus and sulphur. If we consider the analyses of sample No. 2, given on page 96, as representing an average of the three days' working. this would be an admirable iron for either acid Bessemer, or acid Siemens steel manufacture, if it were not for its high content of manganese. The same remark applies to sample No. 3. For many purposes, No. 2 would give good results in foundry work, but here again the manganese is higher than is necessary or desirable. Manganese for acid Bessemer or acid Siemens work is not only objectionable as causing excessive waste, but very seriously fluxes the lining, and so increases the cost for repairs, and, in fact, this iron could not be economically used alone. The high percentage of manganese, however, may be regarded as accidental, owing to the ore used containing a considerable percentage of oxide of manganese, and there would be no difficulty in producing a similar pig iron low in manganese from a non-manganiferous iron ore. It will be noticed that all the pig iron produced, whether white or grey, is extremely low in sulphur, and how far this is due to the manganese present it is difficult to say, as it is well known that manganese acts as a desulphuriser under similar conditions in the blast furnace.

Pig irons Nos. 4 and 5, containing from 0.6 to 0.7% of silicon, would be splendid pig irons for basic Siemens work, provided the manganese were 2% instead of 4.0%. It will be seen that all the phosphorus present in the ore has passed into the pig iron, which is exactly what occurs in the blast furnace, so that a phosphoric or non-phosphoric pig iron can be produced at will by selecting a suitable ore. Pig irons similar to Nos. 4 and 5, if made from phosphoric ores, would do admirably for basic Bessemer, apart from the unnecessarily large percentage of manganese.

Although white and grey iron had been produced during this experiment, I was not quite satisfied that the grade of iron could be controlled and varied at will, and consequently it was decided to make another experiment.

In this second experiment it was arranged that all grades of iron, from grey foundry to white, and suitable for acid Bessemer and Siemens, and also for the basic process, should be made.

The first two or three casts were gray iron, but this rapidly changed to mottled and white, and then finally came back to grey. During the night of the 23rd of March, the slag, which was very siliceous and ferruginous, became very infusible, and to increase its fluidity a little fluor spar was added, and the lime was increased. This had the desired effect, but the slag was still somewhat infusible, and the iron very white,and remained so until the fuel was increased, when more silicon and manganese were reduced and passed into the iron, which gradually became greyer, and towards the end of the experiment, a good grey pig iron, with over 2% of silicon, was obtained. On examining the analyses of the iron, it will be noted that as the silicon, graphitic carbon, and manganese decreased, i.e., as the iron became whiter, the sulphur rapidly increased; and as the silicon, graphitic carbon, and manganese increased in the pig iron, towards the end of the experiment, the sulphur decreased.

No. 6 pig iron, from the first three casts, was a good foundry or acid Bessemer iron, but No. 7, although containing 1.590% of manganese, was very high in sulphur, owing, no doubt, largely to portions of the charges represented by analyses Nos. 11 and 12, being included in this average sample. Samples 11 and 12 are exceptionally low in silicon, much lower than would be made in ordinary practice, and the conditions favorable for the production of such an iron undoubtedly favor the absorption of sulphur by the metal, especially in a case like this, when no manganese was reduced and passed into the iron. Assuming it were possible to produce regularly a similar iron in the blast furnace, there is not the least doubt that the sulphur would be equally high, if not higher, unless special precautions were taken to ensure the reduction of a considerable amount of manganese.

In ordinary blast furnace practice, it is extremely difficult to produce pig iron even with 0.5% of silicon and 0.04% of sulphur, unless manganese is added to the charge and reduced, and as the silicon decreases, the sulphur increases, and apparently the same is true in the electric furnace. It was only on the night of the 23rd that the very high sulphur iron was made, and if we look at the analyses of samples Nos. 8 and 9, representing the average analyses during the next 18 hours, we find the silicon, graphite and manganese increasing, and as these increase the sulphur decreases, until in sample 12, we have a very low sulphur iron. One necessary condition in the blast furnace for the production of low silicon and low sulphur pig iron is to have a basic slag, and one reason why manganese is beneficial is, that apart from any direct action as a desulphuriser, it increases the fluidity of the slag, and so permits more lime to be added to increase its basicity.

It is clear from the analyses, that an iron suitable for acid Bessemer, or foundry purposes, containing, say, 2.0% of silicon, and under 0.02% of sulphur, can be produced, but it is not so apparent, from the analyses, that an iron suitable for the basic process, with 1.0 to 0.50% of silicon, and 0.04% or less of sulphur can be obtained, although samples Nos. 4 and 5, in the first experiment, show that this is the case when manganese is present.

So far as these experiments go, they seem to show that the quality of the iron produced in the electric furnace depends upon maintaining the same conditions as in the blast furnace, the only difference being that you are using electric energy instead of the direct combustion of carbon to produce the necessary temperature.

Thus, in the blast furnace, with a light burden of ore, i.e., a relatively large percentage of coke, a grey pig iron is obtained, high in graphitic carbon and silicon, and generally low in sulphur. As the amount of coke in the furnace is reduced, the graphitic carbon and the silicon decrease, and the sulphur increases and white iron is produced. Provided manganese is present in the ore, and there is sufficient coke present to reduce it, so that about 2.0% passes into the pig iron, and a slag rich in lime is maintained, a pig iron low in silicon and sulphur, say, from 0.50% silicon and 0.04% or less sulphur, is readily obtained. If for any reason the percentage of lime in the slag becomes considerably less, or the manganese oxide present is not reduced, and passes into slag, we obtain a white iron low in silicon and manganese, but high in sulphur. In the absence of manganese ore, under special conditions, it is possible to make a low silicon,low sulphur pig iron, by working with very limey basic slags, but the difficulty is to obtain the necessary heat to maintain the refractory slags produced in a sufficiently fluid condition.

If we consider the results obtained in the foregoing experiments, we shall see they are identical with what we should have expected from blast furnace experience. In the first experiment we had more coke during the early part, with the result that grey iron containing manganese was produced, and this in conjunction with the slag being fairly basic ensured a low sulphur iron. Towards the end of the experiment the coke was reduced; the iron became lower in silicon, but the slag being still sufficiently basic, and the temperature high enough to reduce the manganese oxide, low sulphur pig iron was still produced. It will be noted that the electric energy consumed per ton of iron produced was greater in the first than in the second experiment, which accounts for the higher temperature and the more perfect reduction of the manganese oxide. In the second experiment, we started with less coke and far less lime on the burden, and also far less electric energy per ton of iron was consumed, with the result that a lower temperature prevailed, the reducing conditions were far less perfect, and a far less basic slag was maintained. The result was that white iron, low in silicon, and in some cases practically free from manganese, was obtained, and the sulphur greatly increased in the pig iron. Thus, low temperature, poor reducing conditions, and an acid slag produced exactly the same result as would have been obtained in a blast furnace, viz., a high sulphur iron.

For the second experiment there was not time for M. Keller to have a complete analysis of the materials made, and the result was he did not put sufficient lime on with the ore material; it also seems that the amount of current employed was not sufficient to ensure the required temperature for the reduction of a reasonable percentage of manganese. In the first experiment too much manganese was reduced, and in the second it was intended to decrease this to about 1.5%, but too low a temperature being maintained during part of the experiment, no manganese was reduced, and a high sulphur pig was the result. The influence of manganese in preventing sulphur from passing into the pig iron during smelting is both direct and indirect, and it is a question how far, in the absence of manganese, a basic slag can be made to prevent sulphur passing into the iron. In the blast furnace the basicity of the slag is limited by the temperature available, but in the electric furnace, by increasing the current a sufficiently high temperature can be maintained to fuse almost any slag, and in my opinon there would be no difficulty in producing an iron low in sulphur, without manganese, provided sufficient lime were charged with the ore.

In the presence of manganese and a fairly basic slag, the first experiment shows there is no difficulty in producing low sulphur iron, but the experiments cannot be said to have demonstrated that low sulphur pig iron can be obtained without manganese in the ore mixture, and before this can be considered *experimentally* proved, it will be necessary to have a series of experiments made with non-manganiferous ore. In view of the fact that the ore is in intimate contact with about only one-third the quantity of coke, that it is in the blast furnace, together with the facility with which the temperature can be controlled to fuse a basic slag, there seems no reasonable doubt that low sulphur iron can be produced in the electric furnace in the absence of manganese.

If the analyses of the slags in the first and second experiments are examined, it will be seen that the ratio of lime to silica in the first experiment was very much higher than in the second, there being approximately 10 per cent more lime in the first slag than in the second, while the percentage of silica remained the same; there can be little doubt that the higher sulphur in the pig irons from the last experiment was largely due to the acid character of the slag, and if a basic slag, rich in lime, had been maintained, the resulting pig iron would have shown a very different composition. The following are the actual weights of the materials charged during each experiment:—

1st Experiment.		2nd Experiment.	
Ore (dry)	15,943 kgs.	Ore (dry)	13,310 kgs.
Coke	3,392 "	Coke	2,745 "
Lime	1,671 "	Lime	584 "
Quartz	688 "	Quartz	nil
Yield of metal, 9,868 kgs.		Yield of metal, 6,692 kgs.	

If the amount of silica and lime in the ore, coke, lime and quartz is calculated from the analysis given, it will be found, approximately, that for every kg. of silica in the first charge there was 1.7 kgs. of lime; whereas in the second charge, for every kg. of silica there was only 1.1 kgs. of lime. The amount of lime charged in the first experiment was 104 kgs. for every 1,000 kgs of ore, and in the second, only 40 kgs.; but this was to some extent balanced by 43 kgs. of quartz per 1,000 of ore being charged in the first and none in the second experiment. These calculations confirm the analyses of the slags.

Castings.

During the first experiment numerous castings were made with excellent results. The metal ran very fluid, gave sharp, solid castings, and in most cases was fairly soft for machining. In the second experiment most of the iron, being white or mottled, was not suitable for foundry work, but several castings were made from selected grey iron, and were in every way satisfactory.

COSTS.

In discussing the question of costs as compared with the costs of the blast furnace, we have to consider those which are special to the electric furnace, those which are special to the blast furnace, and those which are common to both.

Electric Energy.

The amount of energy consumed in the first experiment was 0.475 E.H.P. years per ton of 2,000 lbs. of pig produced, and in the second, 0.226 E.H.P. years.

In the first experiment the iron was much greyer, and contained more silicon and manganese than was necessary or desirable, pointing to the fact that a higher temperature was maintained than was necessary, and consequently more energy expended. In the second experiment, on the other hand, we find the temperature was such that the silicon and manganese were only slightly reduced during a considerable portion of the experiment. This can hardly be due to the coke's being present in insufficient quantities, as charges in No. 1 experiment gave greyer iron than in No. 2 experiment, although 5 kgs. less of coke were used in many of the charges. The only explanation seems to be that a sufficient current was not passed through the charge to give the temperature necessary for the reduction of these bodies. It would, therefore, appear that to make iron of all grades, which necessitates heat sufficient to keep refractory basic slags fluid, it will not be safe to calculate upon less energy than the mean consumption in the two experiments, and for some purposes it may exceed this. This gives 0.350 E.H.P. years per ton of pig iron. With improved appliances and larger furnaces, this may be considerably reduced, but for the present it will be safer to take this figure as a basis for calculations. At $10 per E.H.P. year, this is equivalent to $3.50 per ton of pig.

Electrodes.

During our short stay at the works it was impossible to determine the cost of the electrodes per ton of iron produced, but M. Keller took out the costs from his books over some considerable time of working for the furnaces, making ferro-silicon and other iron alloys.

He gives the cost of the electrodes, including the materials, labour, coking, &c., as about $45 per ton, and the consumption as rather under 34 lbs. per 2,000 lbs. of pig iron; this is equal to a cost of $0.77 per ton of pig iron produced.

Coke.

The amount of coke used in the first experiment was 3,392 kgs, equivalent to 311 kgs., or 685 lbs. per 2,000 lbs. of pig iron produced, and in the second experiment, 2,745 kgs., equivalent to 372 kgs., or 820 lbs. per 2,000 lbs. of pig. Taken through the entire experiment, the coke used in the first was less than that used in the second experiment. In view of the fact that grey iron, containing a very considerable percentage of manganese, was obtained during the greater part of the first experiment, it is evident that the coke mixed with the ore was sufficient for the reduction, and that the less complete reduction in the second experiment was not due to lack of reducing agent, but to other causes, which have already been referred to. It may, therefore, be taken that the coke required per 2,000 lbs. will approximately be 685 lbs., or 0.34 tons. Taking coke at $7, this gives us $2.38 for reducing agent per 2,000 lbs. of pig produced.

If we compare the amount of coke used in a modern blast furnace, working on a similar ore, we shall find it will be about 1,850 lbs. per 2,000 lbs. of pig iron, costing $6.40.

Fluxes.

Under normal conditions the only flux required will be the lime, as usually the silica and alumina in the ore will be sufficient, and in the event of more being required, a small quantity of aluminous ore would be mixed with the charge, so that we need only consider lime.

The amount of lime used in experiment No. 1 was 340 lbs. per ton of metal, and this is the very minimum which could be safely employed, even with such low siliceous ores as those used in the experiment. In the best American blast furnace practice, with 56% ore, the average amount of limestone used is about 800 lbs. per ton of iron produced; in England, with less pure ores, it averages 1,200 lbs., equivalent to about 380 and 570 lbs. of lime respectively. Notwithstanding the much smaller quantity of coke ash to be fluxed in the electric furnace, I think it will be safe to assume 400 lbs. of lime are necessary, in view of the necessity of maintaining a basic slag for the removal of sulphur. Taking lime at $2 per ton, this will cost $0.40 per ton of iron about the same as the blast furnace. This amount of lime may seem somewhat high, but it will be exceptional to find ores with only 3% of silica, and to insure a regular iron low in silicon and sulphur when manganese is absent, more basic slags than those produced in No. 1 experiment will be necessary.

Labour.

It is extremely difficult, from two such small experiments as are described in this report, to arrive at reliable figures as to labour costs on a large commercial scale. At Livet all the charging, the removing of the iron and slag, &c., were done by hand, and the number of men employed would bear no comparison to a plant arranged with modern labour-saving appliances.

M. Keller estimates that a small plant producing 20 tons in the 24 hours in which the mixing is done with the shovel, and the furnace charged by hand, would require 28 men; whereas a plant properly equipped for mechanical mixing and charging, producing 100 tons per 24 hours, would require only 60 men. A modern American blast furnace, producing 350 tons per 24 hours, employs about 100 men, and an English blast furnace, producing 150 tons per 24 hours, but in which less mechanical devices are used, employs almost exactly the same number. In the former case there would be more than twice the weight of materials to be handled that there is in the latter, and it illustrates how hand labour can be replaced with suitable appliances. As the handling of the ore, coke, and fluxes, and the removal of the pig iron and slag would be on very similar lines to blast furnace practice, M. Keller's estimate is probably not far outside the mark, especially if, as he assumes, the molten metal were taken away direct to a steel plant, so that all handling of the pig iron were dispensed with. On starting I consider that a larger number of men would be required, and for the first year or so, until the men settled down to their work, it would not be safe to base calculations on less than 80 men per 100 tons per 24 hours.

Appended are particulars as to the number of men M. Keller estimates, and for comparison are given the numbers of men employed respectively on an English and an American blast furnace. For the latter I am indebted to Mr. Axel Sahlin, of the firm of Julian Kennedy, Sahlin & Co., Ltd., an engineer of very wide experience in blast-furnace practice, both in England and the United States. It must be borne in mind that notwithstanding the great reduction in labour per ton of iron in American practice, it is not all gain, and that the machines are often very costly to keep in repair, and often largely neutralize the saving effected in wages.

ESTIMATE BY M. KELLER OF NUMBER OF MEN REQUIRED FOR ELECTRIC PLANT PRODUCING 100 TONS PER 24 HOURS.	
Preparation and transport of ore mixture to furnaces	10 men
Preparation of electrodes and fixing them &c., &c	4 "
Distributing charge evenly round the furnaces	10 "
Tapping metal into ladle	6 "
Regulating the furnace	4 "
Removal of slag etc.	4 "
Labourers and Bricklayers	10 "
Forgemen, Engineers, Fitters, etc	10 "
	58 "
Say 60 men.	

MEN REQUIRED FOR BLAST FURNACE.	English Blast Furnace producing 150 tons per 24 hours.	United States Blast Furnace producing 350 tons per 24 hours.
	No.	No.
Day foreman	1	1
Night foreman	1	1
Keepers	3	2
1st helpers	3	2
2nd helpers	3	2
3rd helpers	3	2
Cast men	3	2
Slaggers	3	4
Front labourers	2	4
Stove tenders	3	2
Boiler tenders	3	2
Chargers	6	—
Fillers	12	4
Weighmen	3	2
Sweepers	3	2
Stock yard labour	3	4
Stock handlers	5	10
Piglifters	4	0
Water boys	3	—
Casting machine men	—	4
Ladle men	—	2
Labourers and car shifters	—	9
Engineers	6	4
Fitters	2	2
Car oiler	1	1
Yard labour	5	12
Blacksmiths	2	2
Blacksmith helpers	2	2
Electrician	1	1
Electrician helper	1	1
Slag tippers	4	2
Yard engines	*8	**7
Store keeper	1	1
Watchman	1	1
Total	101	97

* English, 2 engines. ** U. S., 1 engine.

Make per man employed: English, 1.49 tons; United States, 3.60 tons.

From the above it will be seen that in the English furnace the production is 1.50 tons per man, in the American, 3.6, and in the electric furnace, 1.6. Taking the average cost of labour at $1.50 per day, this is equal to $1.00 for English, $0.42 for the American, and $0.94 for the electric furnace, so that on the basis of English output, the electric furnace has a slight advantage, but compared with the American, it is $0.52 on the wrong side.

The following are two approximate costs, based upon the figures discussed. The first is the estimate of M. Keller, from the results of the second experiment; the second is my own estimate, after considering the question with respect to the results obtained both in the first and second experiments:—

	M. KELLER'S ESTIMATE BASED ON ENERGY CONSUMED IN SECOND EXPERIMENT.		My Estimate Based on Results from both Experiments	
1	Ore (Hematite 55% iron) 1.842 tons at $1.50 per ton.......	$2.76		$2.76
2	Coke 0.34 tons at $7.00 per ton........................	2.38		2.38
3	Consumption of electrodes $45 per ton (34 lbs. per ton of iron)..	0.77		0.77
4	Lime 300 lbs. at $2.00 per ton.........................	0.30	400 lbs.	0.40
5	Labour at $1.50 per day................................	0.94		0.94
6	Electric energy 0.226 H.P. years at $10 per H.P. year...	2.26	0.350 E.H.P.	3.50
7	Miscellaneous materials........	0.40		0.40
8	Repairs and maintenance................................	0.20		0.20
9	General expenses.......................................	0.20		0.20
10	Amortization (machinery and buildings)	0.50		0.50
	Total without royalty.......	10.71		12.05

If we now consider these costs in comparison with the blast furnace, we get the following:—

ELECTRIC SMELTING		BLAST FURNACE	
Ore....................................	$2.76	....	$2.72
Coke 0.34 ton..........................	2.38	0.925 tons....	6.40
Electrodes.............................	0.77	....	nil
Lime 400 lbs...........................	0.40	400 lbs.....	0.40
Labour.................................	0.94	American practice	0.42
Electric energy........................	3.50	....	nil
Steam raising for blowing engine	nil	....	0.10
Miscellaneous materials...... Repairs and maintenance say.	1.30	....	1.30
	$12.05		$11.34

The steam used for the blowing engines costs little, as it is raised entirely by waste gases from the blast furnace, and 10 cents per ton of steel produced will probably cover it.

On the basis, therefore, of fuel at $7.00, electric energy at $10 per E. H.P. year, the cost of production is slightly in favour of the blast furnace, and even when taking M. Keller's figure of $10.71, when allowance is made for a reasonable royalty, there is little margin upon the side of the electric furnace. The labour for the blast furnace is taken on the best American practice, and it would probably be fairer to increase this figure; but even if taken on the basis of English practice, viz., $1.00 per ton, this only raises the total cost to $12.34 per ton of pig iron, which is practically equal to the cost of electric smelting. The labour costs of 42 cents per ton in American practice must not be taken as an average cost, as they are based on the assumption that wages average $1.50 per man per day, the figure taken for electric smelting. The labour costs, both in England and America, vary considerably, in the former from 48 to 80 cents, and in the latter from 41 to 80 cents, according to the arrangement of plant and the price of labour in the particular district. It will be seen from the above statements that economical electric smelting is simply a question of the relative prices of fuel and of electric energy. With very high-price fuel, owing to the large amount required—nearly three times that of the electric furnace—the blast furnace is placed at a disadvantage; and on the other hand, with fuel at anything below $7 per ton, the electric furnace cannot hold its own. It must be borne in mind that for blast furnace purposes, a hard, mechanically-strong coke must be employed, but for electric smelting, small anthracite, or other small coal or fine coke, provided it is fairly free from sulphur, could be used. Such small coal, anthracite or coke, could probably be obtained at half the price of coke suitable for blast furnaces, and in such cases the reducing agent for the electric furnace would make the cost per ton of pig iron $1 less. If anthracite collieries were anywhere near, large quantities of small anthracite might possibly be obtained at a very low figure. For the purpose of comparison, it has been necessary to consider the value of the fuel per ton as being the same in each case, but local conditions, such as a good supply of a cheap fuel which is useless for blast furnace work, but suitable for electric smelting, might so reduce the cost of production in the electric furnace as to enable it to compete successfully with the blast furnace. Provided charcoal could be obtained cheaply, it could probably be used if it were briquetted with the ore.

PIG IRON SMELTING IN COMBINATION WITH STEEL MAKING.

It may be assumed that if electric smelting is to have a future, it must be in combination with steel manufacture, rather than in the production of pig iron for foundry purposes. In its present stage of development, the electric steel furnace is not suitable for the manufacture of other than high-class special steels, and where large quantities of rail, or structural steel, are required, either the Bessemer or Siemens process, or some modification of these, will have to be adopted. As a class of iron suitable for either of the processes can be produced in the electric furnace, it will be local conditions which will determine the most economical process to adopt.

In the case of the basic process, unless ores are available which will produce a pig iron with not less than 2.25% to 2.50% of phosphorus, the basic Bessemer becomes impossible, and the basic Siemens will have to be used. When hematite ores, producing a low phosphoric pig iron, are obtainable, either the acid Bessemer or the acid or basic Siemens can be adopted. Siemens' steel is undoubtedly more regular in quality than Bessemer steel, and is consequently much preferred by engineers, and for many purposes engineers decline to take Bessemer steel, and insist on Siemens' steel being employed. In view of these facts, unless there are some strong reasons to the contrary, it would be desirable to use some form of Siemens' furnace. Material of the highest quality is now being produced in America and in England, by taking molten iron direct from the blast furnace, or after passing through a mixer to the large basic-lined Siemens' furnaces worked on the Talbot, or ordinary Siemens' system. The electric process of smelting would lend itself extremely well to the production of iron for such purposes, and a low silicon iron of the grade required would cost less to produce than a higher silicon iron suitable for Bessemer work. The disadvantage of using the Siemens or Talbot furnace, as against the Bessemer, is the cost of the fuel; in districts where fuel is dear, coal or slack could probably be obtained at less than half the price of lump coal; and where coke is $7, it should not exceed $3.50 per ton. In the best practice with large Talbot furnaces, the fuel consumption does not exceed 550 to 600 lbs. per ton of steel produced, costing, say, $1.00, and probably with very low silicon iron, delivered very hot into the furnace, the consumption of fuel would be less. The Bessemer, on the other hand, does not necessarily require any coal, as the blowing engines can be driven by electric power. I am unable to say at what cost, as no plant is being worked in this way, but the large high-pressure blowing engines would certainly require considerable power. In England, Siemens' steel is sold on an average at from $2 to $2.25 more than Bessemer steel, so that in view of the superior quality, even if it cost slightly more per ton to produce, a plant to produce Siemens' steel would probably be the better to instal.

This question, however, is one that can be decided only after full consideration of the local conditions, both as to the supply of raw materials, and to the market requirements for the finished steel. Whichever process were adopted, whether Siemens or Bessemer, it would be advisable to take the metal in ladles as tapped from the electric furnace to a metal mixer, holding about 300 to 400 tons of molten metal; this largely insures regular quality, and also removes some of the silicon, and to some extent, under special conditions, some of the sulphur. This metal mixer acts as a reservoir, and besides improving the quality of the metal, facilitates the regular operation of the plant, and prevents delays by insuring a regular supply of metal during repairs, &c., to the smelting or other furnaces producing pig iron.

CONCLUSIONS.

As a result of my investigations into the metallurgy of the electric production of steel and the electric smelting of pig iron, I have come to the following conclusions:—

1. Steel, equal in all respects to the best Sheffield crucible steel, can be produced, either by the Kjellin or Héroult or Keller processes, at a cost considerably less than the cost of producing a high-class crucible steel.

2. At present, structural steel, to compete with Siemens or Bessemer steel, cannot be economically produced in the electric furnaces, and such furnaces can be used commercially for the production of only very high-class steel for special purposes.

3. Speaking generally, the re-actions in the electric smelting furnace as regards the reduction and combination of iron with silicon, sulphur, phosphorus, and manganese, are similar to those taking place in the blast furnace. By altering the burden and regulating the temperature by varying the electric current, any grade of iron, grey or white, can be obtained, and the change from one grade to another is effected more rapidly than in the blast furnace.

4. Grey pig iron, suitable in all respects for acid steel manufacture, either by Bessemer or Siemens processes, can be produced in the electric furnace.

5. Grey pig iron, suitable for foundry purposes, can be readily produced.

6. Pig iron low in silicon and sulphur, suitable either for the basic Bessemer or the basic Siemens process, can be produced, provided that the ore mixture contains oxide of manganese, and that a basic slag is maintained by suitable additions of lime.

7. It has not been experimentally demonstrated, but from general considerations there is every reason to believe, that pig iron low in silicon and sulphur can be produced even in the absence of manganese oxide in the iron mixture, provided a fluid and basic slag be maintained.

8. Pig iron can be produced on a commercial scale, at a price to compete with the blast furnace only when electric energy is very cheap and fuel very dear. On the basis taken in this report, with electric energy at $10 per E.H.P. year, and coke at $7 per ton, the cost of production is approximately the same as the cost of producing pig iron in a modern blast furnace.

PLATE XV

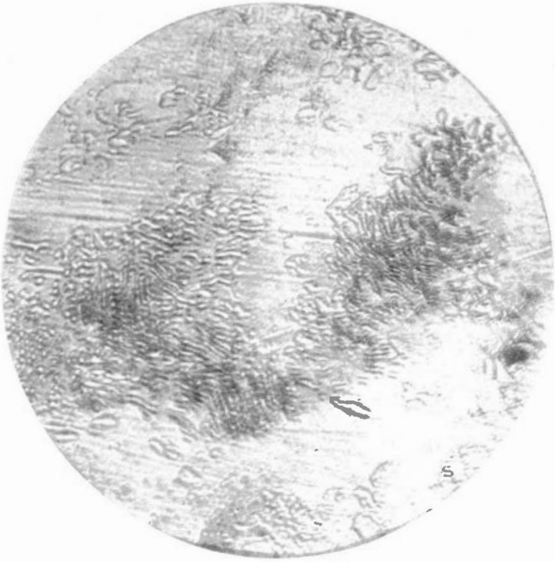

CHARGE 547.

Gysinge medium steel carbon 0.417%. Ferrite and pearlite. Normal structure.

Magnification 1500 diameters.

9. Under ordinary conditions, where blast furnaces are an established industry, electric smelting cannot compete; but in special cases, where ample water power is available, and blast furnace coke is not readily obtainable, electric smelting may be commercially successful.

It is impossible to define the exact conditions under which electric smelting can be successfully carried on. Each case must be considered independently after a most careful investigation into local conditions, and it is only when these are fully known that a definite opinion as to the commercial possibilities of any project can be given.

F. W. HARBORD,

Assoc. Royal School of Mines, Fellow of Inst. of Chemistry, Fellow of the Chem. Society, Consulting Metallurgist to the Indian Government, Royal Engineering College, Cooper's Hill, Surrey.

Cooper's Hill College, June 27th, 1904.

PLATE XIV.

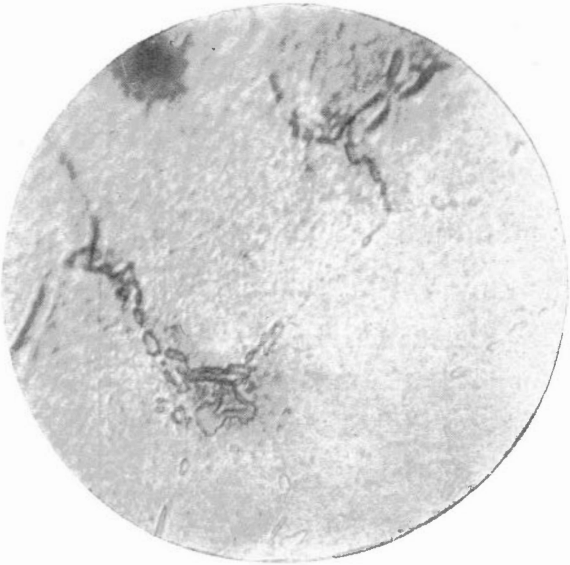

CHARGE 500.

Gysinge mild steel carbon 0.098%. Almost all ferrite, junction of ferrite grains worn away by polishing. Structure normal.

Magnification 1500 diameters.

PLATE XVI.

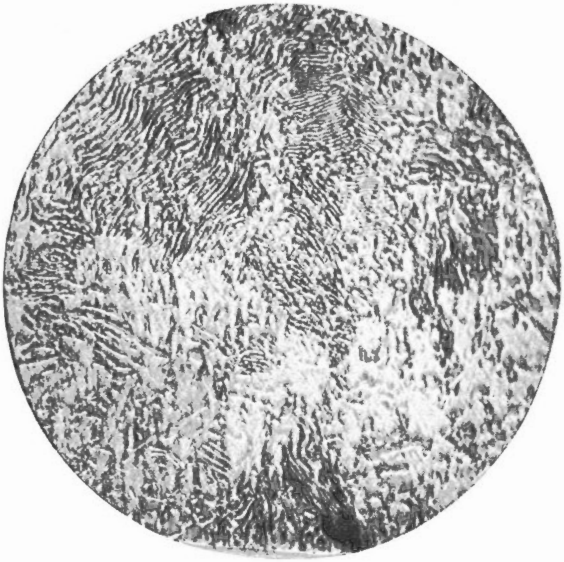

CHARGE 546.

Gysinge high carbon steel 1.082%. Normal structure nearly all pearlite with little cementite.

Magnification, 1500 diameters.

PLATE XVII.

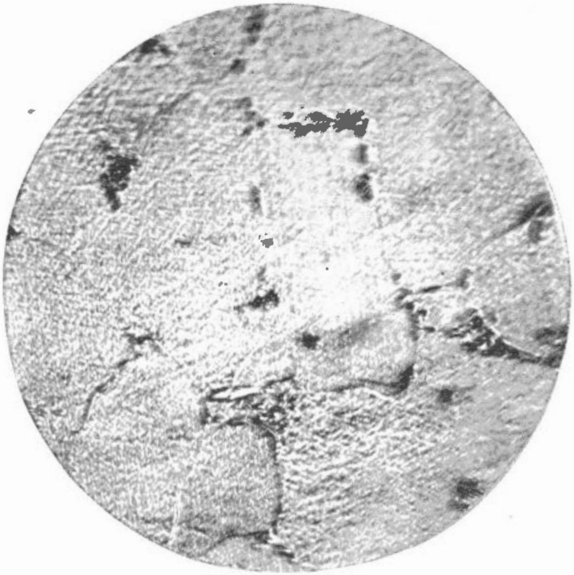

CHARGE 559.

La Praz mild steel 0.129% carbon. Mostly Ferrite, with little pearlite not well developed. Junctures of the ferrite grains worn away by polishing. Structure normal. Magnification 1500 diameters.

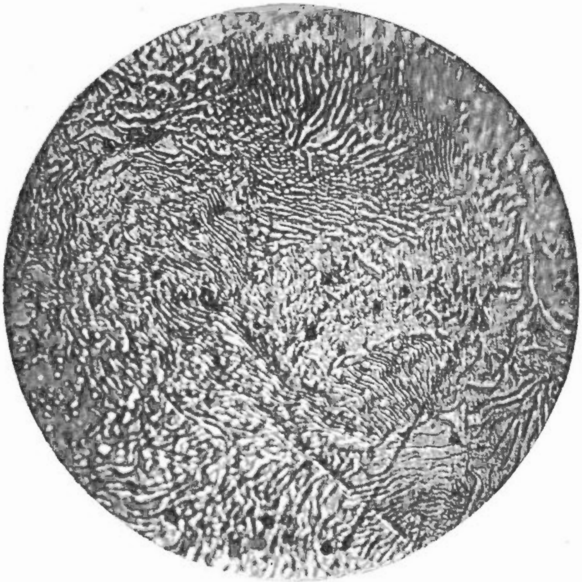

CHARGE 660.

La Praz High Carbon Steel 1.016%. Normal structure.
Nearly all pearlite, little cementite.
Magnification 1500 diameters.

PLATE XIX.

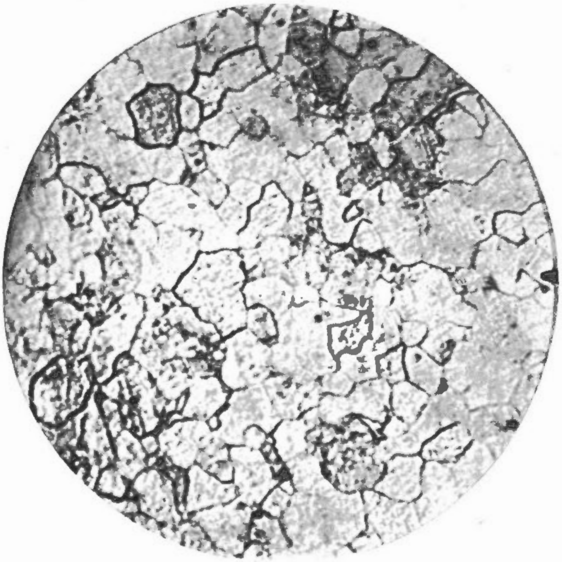

VERY LOW CARBON STEEL MADE IN BASIC.

Siemens Furnace Carbon 0.057%. Typical Ferrite structure showing junction of grains.

Magnification 1000 diameters.

PLATE XX

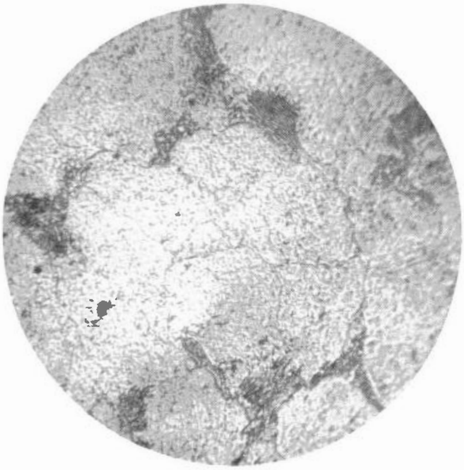

Crucible Steel 0.130 Carbon.

Showing Ferrite and well developed pearlite in places.
Magnification 1500 diameters.

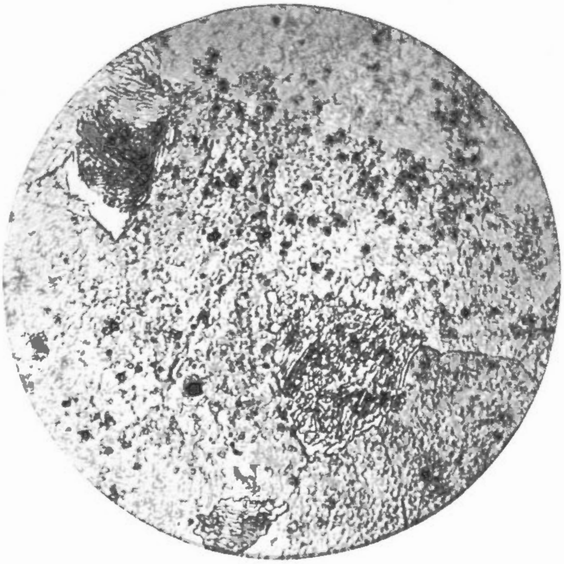

MILD STEEL, ABOUT 0.140% CARBON.

Ferrite with patches of pearlite.
Magnification 1500 diameter.

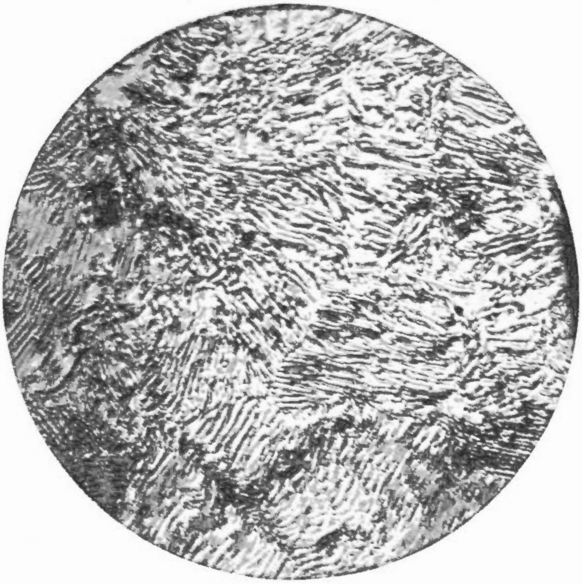

0.90% CARBON CRUCIBLE STEEL.

Almost entirely well-developed Pearlite.
Magnification 1500 diameters.

PLATE XXIII.

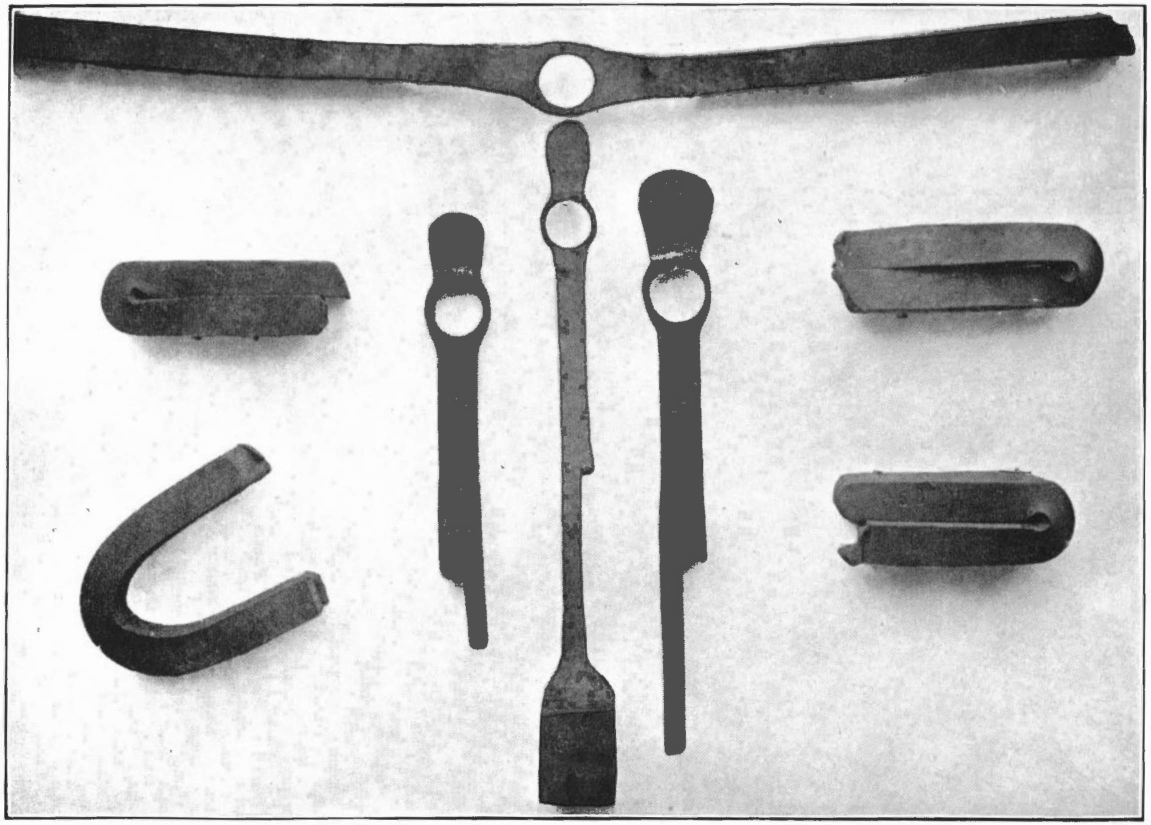

Some of the cold bending, welding and drifting tests of the Gysinge and La Praz Electric Steels.

Fig. 27

MECHANICAL TESTS

Gysinge Steels

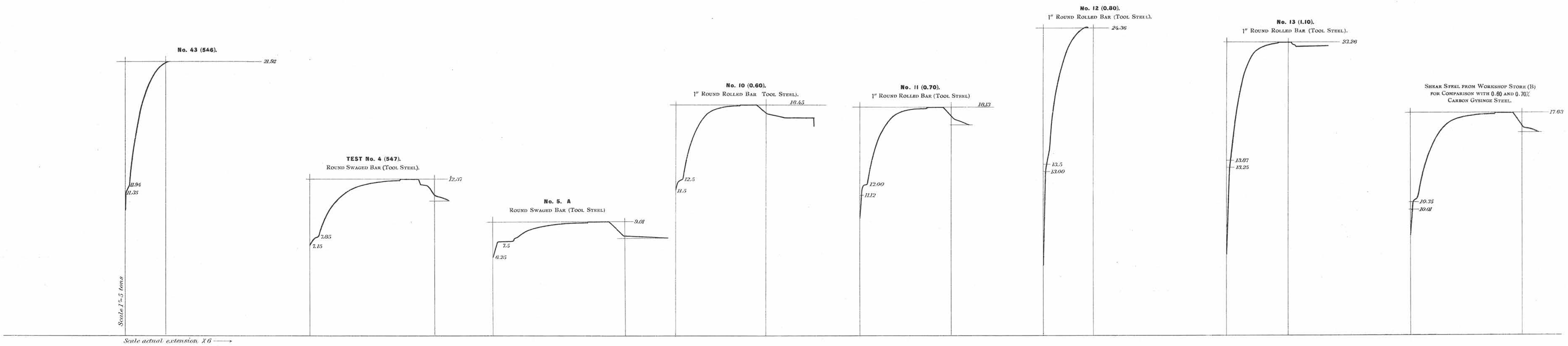

Maximum stress per sq. in. = 56.93 tons.
Elastic limit " " = 29.50 "
Yield point " " = 31.01 "
Elongation per cent. ...... = {7.1 on 6 ins.
7.33 " 150 m/m
Contraction of area........ 6.8%
Carbon...... ,........... 1.082%

Maximum stress per sq. in. = 32.14
Elastic limit " " = 18.57
Yield point " " = 20.39
Elongation per cent. ...... = {22.0 on 6"
22.4 " 150 m/m
Contraction of area per sq. in. = 56.12%
Carbon........................ 0.417%

Maximum stress per sq. in. = 23.41
Elastic limit " " = 16.23
Yield point " " = 19.48
Elongation per cent. = {23.56 on 6"
23.8 " 150 m/m
Contraction of area per sq. in. = 67.86%
Carbon......................... 0.098%

Maximum stress per sq. in. = 47.93
Elastic limit " " = 29.87
Yield point " " = 32.47
Elongation per cent .... = {15.53 on 6"
15.86 " 150 m/m
Contraction of area per sq. in. = 39.5%
Carbon...................... 0.60%

Maximum stress per sq. in. = 47.10
Elastic limit " " = 28.89
Yield point " " = 31.18
Elongation per cent .... = {16.03 on 6"
16.40 " 150 m/m
Contraction of area per sq. in. = 42.08%
Carbon 0.70%

Maximum stress per sq. in. = 63.28
Elastic limit " " = 33.77
Elongation per cent........ = {8.86 on 6"
8.80 " 150 m/m
Contraction of area per sq. in. = 19.49%
Carbon........................ 0.80%

Maximum stress per sq. in. = 60.42
Elastic limit " " = 34.42
Yield point " " = 36.03
Elongation per cent......... = {10.53 on 6"
10.33 " 150 m/m
Contraction of area per sq. in. = 21.56%
Carbon...................... 1.10%

Maximum stress per sq. in. = 45.79 tons.
Elastic limit " " = 25.98 "
Yield point " " = 27.93 "
Elongation per cent......... = {19.73 on 6"
20.20 " 150 m/m
Contraction of area 45.72%
Carbon ....about 0.60 to 0.65%

Fig. 28

MECHANICAL TESTS

Héroult Steels

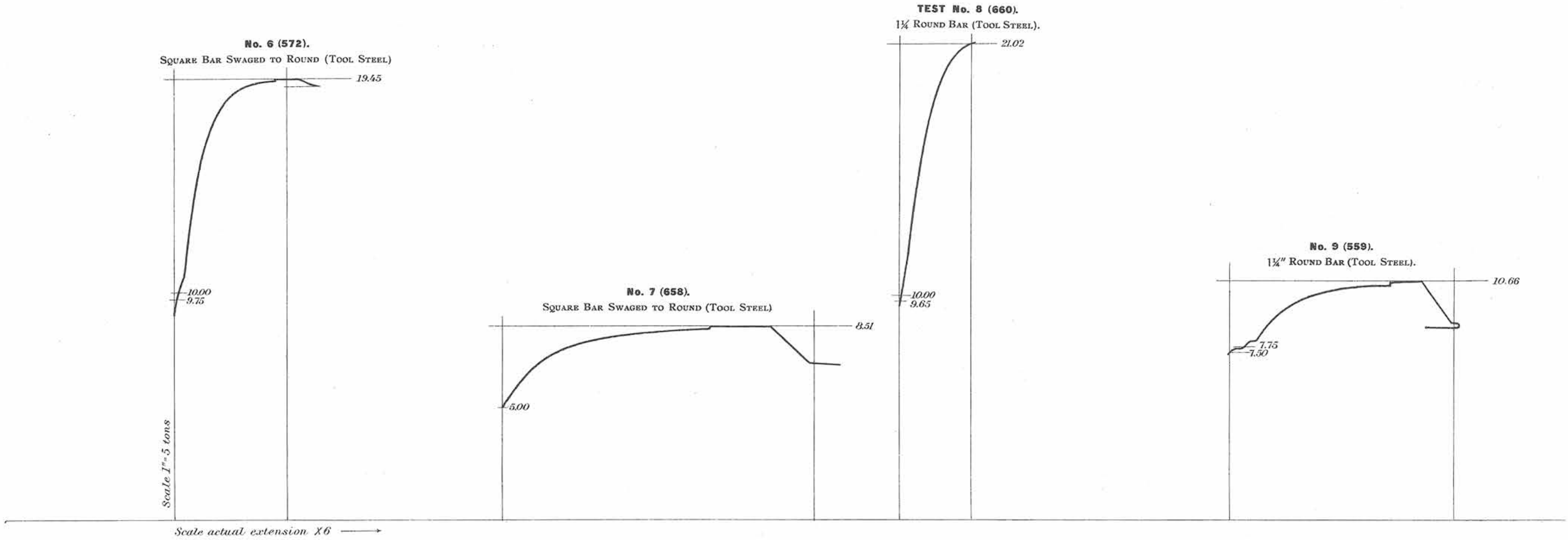

No. 6 (572).
Square Bar Swaged to Round (Tool Steel)

No. 7 (658).
Square Bar Swaged to Round (Tool Steel)

TEST No. 8 (660).
1¼ Round Bar (Tool Steel).

No. 9 (559).
1¼″ Round Bar (Tool Steel).

Maximum stress per sq. in. = 50.52
Elastic limit " " = 25.33
Yield point " " = 25.98
Elongation per cent........ = { 11.06 on 6″
11.26 " 150 m/m
Contraction of area per sq. in. = 21.04%
Carbon..................... 0.95%

Maximum stress per sq. in. = 22.10
Elastic limit " " = 18.18
Yield point " " = 18.44
Elongation per cent........ = { 30.83 on 6″
30.66 " 150 m/m
Contraction of area per sq. in. = 72.48%
Carbon..................... 0.079%

Maximum stress per sq. in. = 54.60
Elastic limit " " = 25.07
Yield point " " = 25.98
Elongation per cent....... = { 6.76 on 6″
6.80 " 150 m/m
Contraction of area per sq. in. = 8.60%
Carbon..................... 1.016%

Maximum stress per sq. in. = 27.69
Elastic limit " " = 19.48
Yield point " " = 20.13
Elongation per cent. = } 22.2 on 6″
22.2 " 150 m/m
Contraction of area per sq. in. = 20.13%
Carbon..................... 0.127%

MECHANICAL TESTS

Héroult Steels

Diagram showing the general arrangement of the Keller furnace with 4 hearths.

Fig. 29

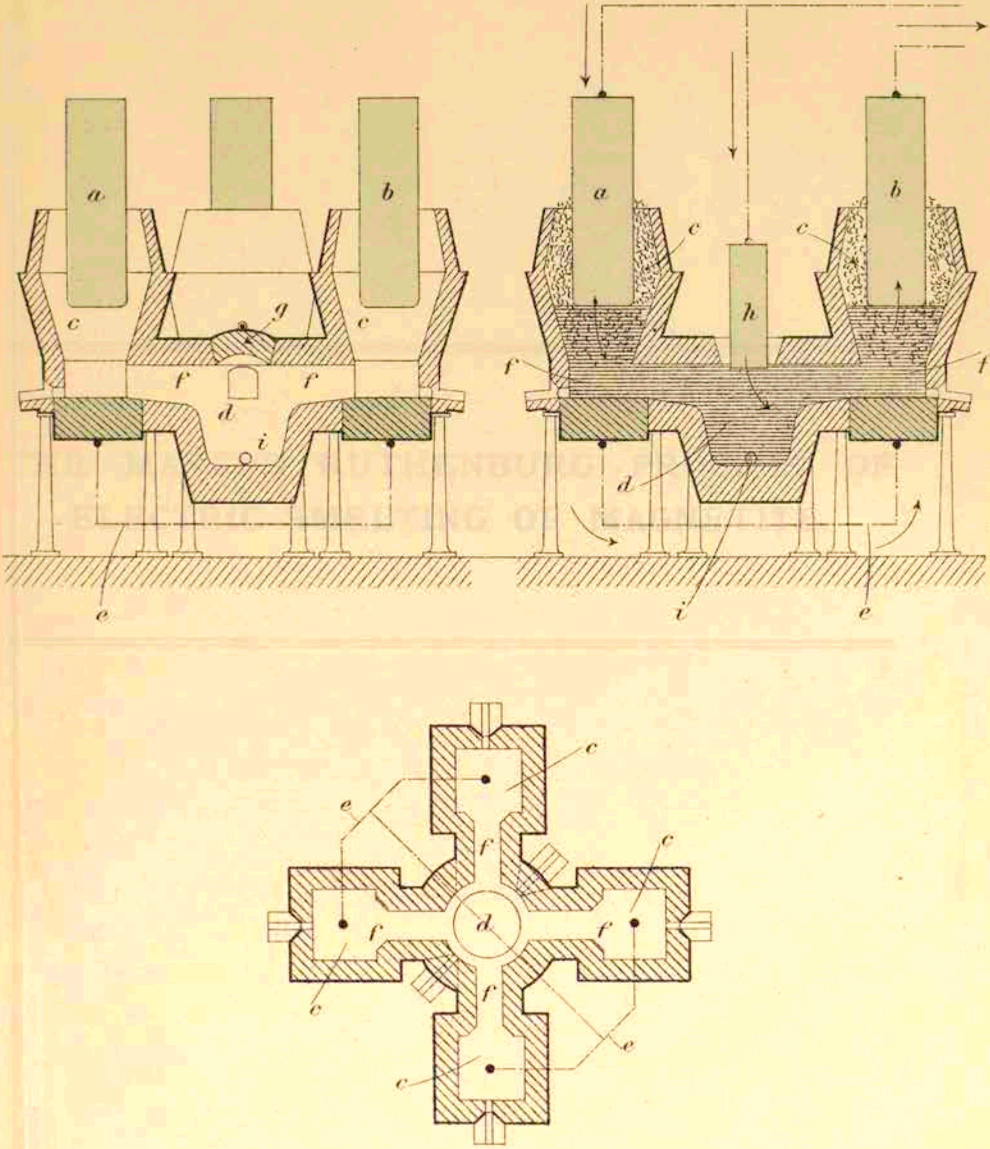

THE MARCUS RUTHENBURG PROCESS OF ELECTRIC SMELTING OF MAGNETITE.

REPORT ON THE MARCUS RUTHENBURG PROCESS OF ELECTRIC SMELTING OF MAGNETITE.

Hon. Clifford Sifton,
Minister of the Interior.

Sir,—

On the 24th of July, 1903, the Commission, consisting of the Government Electrician, Mr. Higman; the Metallurgist, Mr. Locke, and the writer, appointed by you to investigate the Marcus Ruthenburg process of electric smelting of magnetite, left for Lockport, N.Y., where the Ruthenburg electric furnace had been set up in the Cowles Electric Smelting and Aluminium Company's works, situated on the outskirts of the town.

Description of Furnace.

The furnace (see plate XXIV) consists of an electro-magnet (horseshoe pattern) of cast-iron, with pole-pieces of soft steel. The two limbs of the magnet are electrically insulated from each other at the bend, which, in the form of a joint, permits the variation of the gap between the poles by means of a screw. The limbs of the magnet are surrounded for nearly the entire length by closed brass drums, which are provided at the end farthest from the poles with means for rotating them in directions toward the gap. The rotation is effected by a separate motor of about $\frac{1}{4}$ horsepower. These drums serve the purpose of absorbing by water circulation through them the heat generated and of giving motion to the ore toward the gap. The parts of the drums to which the working current is distributed, and which form the electrodes, are armed with carbon plates. This current was furnished by two Brush Direct Current Generators, joined in series, of 50 volts and 3,000 amperes capacity each, thus giving 100 volts and 3,000 amperes.

A Weston ammeter of 4,000 amperes capacity, a Weston voltmeter, reading to 120 volts, and a Scheefer recording wattmeter, No. 42,203, specially constructed for 2,000 amperes at 110 volts, were in circuit with the main current.

Description of the Process.

The magnetite is first coarse-crushed and sent through Cornish rollers for fine crushing. From these it passes into magnetic separators, which eliminate the non-magnetic constituents. The resulting concentrates are mixed with carbon in amount somewhat in excess of the amount needed to reduce the ore to the metallic condition. Partial reduction of the ore is expected to be effected by the working current in the gap of the carbon-covered drums; where, on account of the magnetic field, the mixture of ore and carbon forms a bridge, the carbon being held in place by the magnetite threads which span the gap. The partially reduced ore in the heated condition loses its magnetism, and drops into a cooling pit, being replaced by a fresh mixture of ore and carbon; the process is thus automatic and continuous.

The partially reduced and heated ore is expected to agglomerate into masses in the pit, where it is assumed to undergo further reduction. After the cooling, the fritted mass is, according to the Patentee's account, melted in a cupola, and cast into ingots, or directly transferred to an open hearth furnace and converted into steel.

INVESTIGATION OF THE RUTHENBURG PROCESS BY THE COMMISSION.

Calibration of Electrical Measuring Instruments.

In order to ascertain the electric horse-power absorbed per ton of product, it became necessary to verify the indications of the electric meters in circuit with the furnace. This calibration was undertaken by Mr. Higman, who employed for this purpose his own official standards. The Weston ammeter and voltmeter were found to be correct, but on passing current through the Scheefer recording wattmeter, which was to be relied upon in furnishing the total watts delivered, it failed to record, although the ammeter indicated the passage of a current of from 500 to 1,000 amperes, at a pressure of 100 volts. A telephone message was sent to the agents representing the firm of manufacturers of the meter in St. Catharines, asking for an expert to adjust the instrument. On his arrival, current was again passed, but the instrument could not be made to record. It was, therefore, decided to take the instrument down and examine it. It was then found that one of the ball bearings on which the spindle moved was missing. On supplying a new ball-bearing, and testing the instrument, it still failed to record. A further examination revealed the fact that the connection of the potential coil with the armature had been broken. The wattmeter being of special design, and not kept in stock, it became necessary to send it back to the factory in Peoria, Ill. To avoid all unnecessary delay, Mr. Higman undertook to convey it to the factory, and personally supervise its refitting. Expenses for this journey were met by Mr. Simpson. Meanwhile, the furnace was set in operation, and the patentee experimented in ascertaining the best method of feeding the ore and carbon to the reduction space.

Preparation and Conveyance of Charge to Reduction-Space of Furnace.

The mixture of ore and carbon, placed in the bin above the furnace, was permitted to run from a chute into a feeding box placed on top of the left hand rotating electrode. A lever operating a slide in the box permitted the regulation of the delivery slit. It was soon found that the magnet would pull the magnetite out of the slit, and leave the carbon behind, which, accumulating at the opening, would intermittently be forced out by the rotation of the drum. This prevented a proper mixture of ore and carbon. A second box, similar in construction to the former, was then placed upon the right hand rotating drum and filled with powdered charcoal, the left hand feeding box being filled with pure ore. The slides of the feeding boxes were now opened, but while the ore passed freely down to the gap, the charcoal choked the slit, and that which passed out adhered to the carbon of the electrode, preventing an effective mixture of the ore with the carbon throughout the gap.

Both feeding boxes were now removed, and the feeding effected from the spout placed over the centre of the furnace, directly over the gap, and the spout provided with a slide. To insure proper mixture of the ore with the carbon, the patentee mixed the ore with part carbon and sawdust, expecting the sawdust to act as a distributor of the ore, and, by evolution of hydro-carbons in the arc, aid in the reduction of the ore. As might have been foreseen, the flame produced by the ignited sawdust set the chute, which was made of wood, on fire, necessitating the replacement of the charred part by a metallic conduit. For this the patentee used galvanized iron! which, becoming magnetic, retained part of the ore, which hung in beards from the sharp edges and corners of the spout, preventing regular feeding of the mixture of ore and carbon. Moreover, much of the sawdust which had passed through the gap was found not to have been acted on by the electric current.

A mere recital of these experiments conducted by the patentee shows how imperfectly the treatment of magnetic ores by his process has been worked out by him.

Determination of Electric Energy Absorbed.

On the return of Mr. Higman from Peoria, Ill., with the repaired wattmeter, it was decided to make a run of a quantity of ore sufficient to determine the electric horse-power absorbed in the furnace per ton of product. The following mixture was employed by Mr. Ruthenburg for this purpose:—

Moisie iron sand	3,200	lbs.
Sawdust	200	"
Coke (crushed)	800	"
	4,200	"

When preparing this mixture, I pointed out to the patentee that the coke should be properly sized to consist of particles not larger than twice the diameter of the average diameter of the particles of the iron sand, to insure uniformity of resistance in the gap, and that the sawdust, which increased the resistance without materially aiding in the reduction, should be omitted if it was desired to prove a low absorption of electric energy by his furnace. No change, however, was made in the ingredients of the mixture, nor was an attempt made to render the particles of the mixture of uniform size. To prevent the mixture from separating in the bin into its ingredients, according to the specific gravities of the components, the patentee wetted the mixture, hoping that the particles of ore would adhere effectively to the wet sawdust and coke. This naturally imposed the additional useless burden upon the furnace of providing sufficient heat for the evaporation of such water.

On starting the furnace it was found that the resistance in the gap was so great that with the available pressure of 100 volts only about 150 amperes on an average could be driven through the ore bridge in the gap, and even when the gap was narrowed to $\frac{5}{8}$ of an inch, the current could not be materially increased. The uneven feeding and the uneven size of the particles of the mixture caused the resistance in the gap to vary to such an extent that the ammeter indications fluctuated rapidly and throughout the experiment between 50 and even 0 to 200 amperes. The disk of the recording wattmeter remained stationary whenever the current strength fell below 150 amperes. It is evident that under these conditions the wattmeter readings, as recorded by Mr. Higman for the separate runs, would not represent the whole of the electric energy absorbed.

The sawdust was only partially acted on in the gap, particles passing through without having been carbonized, and the larger pieces of coke. heated to a bright redness by the current, absorbed electric energy without useful return in effecting reduction of the ore.

The iron sands and coke particles fell in a fine, fiery rain into the pit, where they rapidly cooled. The iron sands having lost their magnetism before incipient fusion had set in, the product of the furnace in the pit failed to agglomerate into masses, and consisted apparently of nearly the same physical and chemical constitution as the ore mixture employed.

It was, therefore, thought a waste of time to continue the run after 17 hours and 37 minutes trial, although a considerable quantity of the charge still remained in the bin. The furnace was, therefore, shut down, the remaining charge run out and weighed. The weight of the product was also ascertained. These weights are not recorded, since they are entirely unreliable, a number of accidents having occurred during the trial. such as the falling down of the front of the pit, and the spattering of hot water from the pipes of the drum upon the product, &c.

Mr. Higman reports that: "The total amount of energy recorded by the wattmeter was 103 kilo-watt-hours, but since the meter failed to record when the current fell below 150 amperes, the record cannot be accepted even as approximately correct.

103 readings of the volt-amperes taken during the test give an average rate of consumption of 17,400 watts, or a total, during the 17 hours and 37 minutes, of 306.5 kilo-watt-hours. These figures approximate very nearly the actual energy consumed."

Taking Mr. Higman's last figure of electric energy absorbed, the total quantity of ore treated in 17 hours 37 minutes amounted to 1,732 lbs., or 1.18 tons per day of 24 hours, and the total electric energy expended in putting this amount through the furnace would be 417.6 kilo-watt-hours, equal to 559.7 electric horse-power hours, which gives for one ton an expenditure of 0.054 horse-power years.

Metallurgist's Report.

Mr. Locke, the metallurgist, reports as follows, regarding the assays of the samples taken by him during the progress of the trial runs with the Ruthenburg furnace:—

"The Moisie sands were put through a magnetic separator of Mr. Ruthenburg's invention. The following are the assays of the results of the magnetic separation:

	Original Sands.	Concentrates.	Tailings.
	%	%	%
SiO_2	8.46	1.21	17.47
Fe	56.22	68.88	44.02
O................	19.66	25.34	15.06
TiO_2	14.93	3.01	22.00
MnO	0.41	0.27	0.66
P.................	0.008	0.004	0.009
S.................	0.005	trace.	0.008

Regarding the oxygen as combined with the iron to Fe_3O_4, we have:

	Original Sands.	Concentrates.	Tailings.
	%	%	%
SiO_2	8.46	1.21	17.47
Fe_3O_4..............	71.23	91.86	54.47
Fe (otherwise combined)....	4.65	2.36	4.61
TiO_2	14.93	3.01	22.00

For the charge of the electric furnace the concentrates in column 2 were mixed with coke and sawdust, in the proportion of 80 parts concentrates, 20 parts coke, and 5 parts sawdust, The coke used contained 88.21% carbon; *the sawdust was not analysed*; the fixed carbon of wood, though, varies little from 50%. Assuming this figure, the charge would contain:—

0.93 %	SiO_2
69.98 "	Fe_3O_4
1.98 "	Fe (otherwise combined)
2.29 "	TiO_2
19.16 "	C

In these figures no consideration has been taken of the ash of the coke.

This mixture was put through the electric furnace, and of the resulting product a part was taken hot and quenched in water, whilst the rest was allowed to cool slowly in the pit of the furnace. These two parts assayed as follows:—

	Quenched. %	Cooled Slowly. %
SiO_2	1.71	1.76
Fe	59.92	61.57
O	21.41	19.47
TiO_2	2.24	2.56
C	14.72	14.64

or, regarding the oxygen as combined with the iron to Fe_3O_4 we have:

	Quenched. %	Cooled Slowly. %
SiO_2	1.71	1.76
Fe_3O_4	77.43	70.65
Fe	3.90	10.39
TiO_2	2.24	2.56
C	14.72	14.64

Eliminating the carbon, the results are as follows:

	Quenched. %	Cooled Slowly. %
SiO_2	2.00*	2.06*
Fe_3O_4	90.95	82.69
Fe	4.40	12.25
TiO_2	2.63	2.99*

* The increase in the silica is caused by the silica contents of the coke.

CONCLUSION.

From these results it is evident that the reduction of the magnetite, either in the reduction gap of the furnace, or in the soaking pit below the furnace, had been insignificant.

Whatever the claims made by the patentee for his process, as exhibited to the Commission, the foregoing results of the investigation demonstrate its entire failure as a process for either agglomerating and fritting the finely-divided ore, or for any useful reduction of the iron ore.

The fact that the magnetite loses its magnetism before incipient fusion takes place will prevent the agglomeration of the charge in the pit and the narrow gap between the poles, through which the charge requires to pass, will always render the capacity of the furnace small. These two facts preclude the hope that modifications of the process will render it commercially useful for agglomerating finely-divided ore, in substitution of briquetting.

I have the honour to be,
Sir,
Your obedient servant,
EUGENE HAANEL,
Superintendent of Mines.

PLATE XXIV.

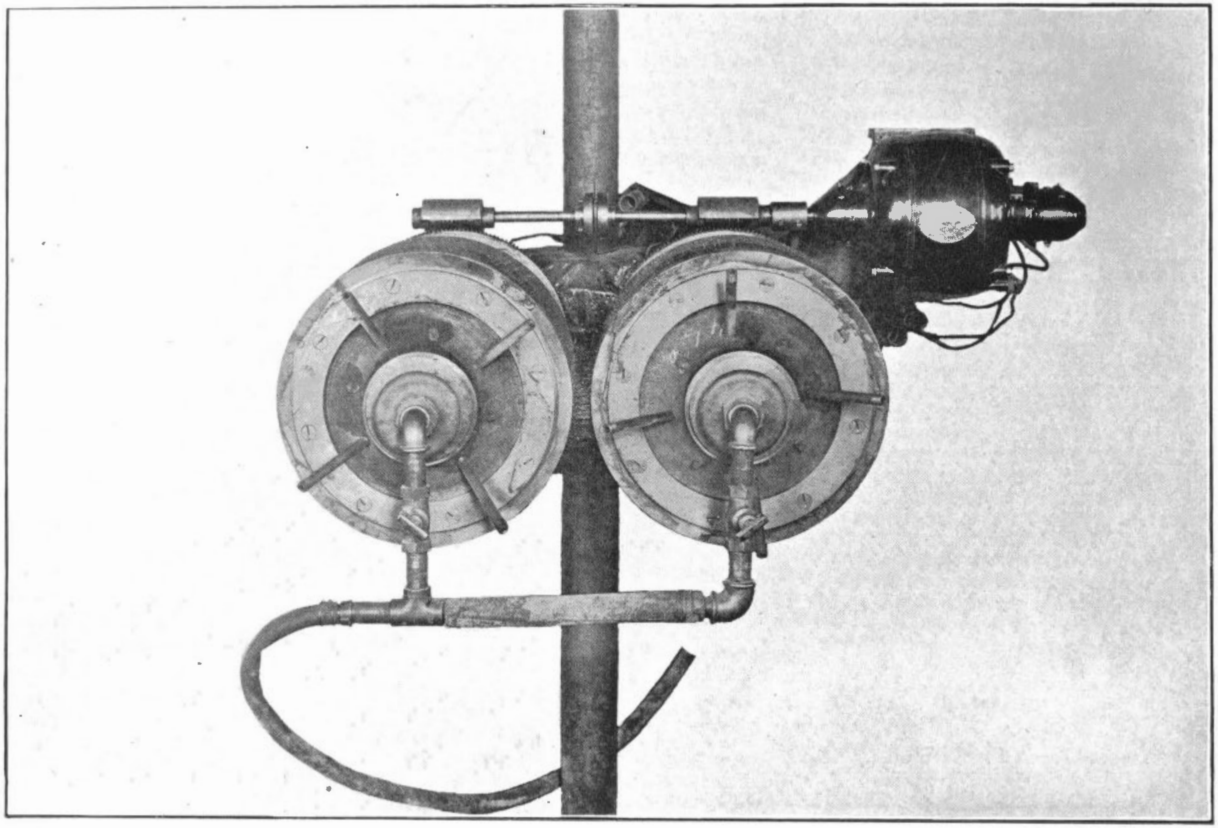

The Marcus Ruthenburg Electric Furnace, front view.

APPENDIX.

TREATISE ON ELECTRO-METALLURGY OF IRON.

BY

HENRI HARMET.

FIRST PART.

TREATISE ON ELECTRO-METALLURGY OF IRON.*

BY HENRI HARMET.

Physical state in which the reducer and the oxides to be reduced ought to be.

The metallic oxides, such as oxide of iron, placed in a solid state in the presence of a reducer, such as coke, for example, itself in a solid state, are reduced under the influence of heat but slowly, and then only in the immediate neighbourhood of the points of contact.

This method of reduction is made use of in working with small quantities, and intermittently, in the crucibles lined with carbon, in the laboratory, in the old low furnaces, fining-forge, and similar furnaces; again, it must be admitted, that in these appliances a great proportion of the reducer acts in the form of gas.

But when the question of continuous production on a larger scale is examined, it is found that in order to produce reduction on a commercial scale, it is necessary, under the influence of a sufficiently high temperature:

1st.—That the carbon transformed into reducing gases should penetrate the pores of the oxide which remains solid.

2nd.—Or else that the liquified oxide should surround the solid carbon, thus multiplying and renewing the points of contact.

It is hopeless economically to effect the reduction of liquified oxides, by causing the carbon, converted into reducing gases, to act upon them.

Reduction by means of the heat produced by the reducer.

The reduction on a commercial scale of solid oxides by carbon transformed into reducing gases has for a long time been carried on in the ordinary blast furnace under the influence of heat given off in the hearth by the combustion of the solid reducing agent, coke or charcoal.

The reduction of liquified oxides by a solid reducer has not been so employed, we believe, as to use heat supplementary to that of the carbon

---

* From the French.

itself; the carbon surrounded by the liquified oxides could not give off supplementary heat, having no point of contact with the oxidizing air.

Reduction by means of the heat resulting from conversion of electric energy.

The introduction of electricity as a source of independent heat simplifies the problem of reduction, by leaving the reducing agent free to accomplish simply the chemical action which is required from it; the reduction of liquified oxides by solid carbon becomes thus possible.

For the two cases: 1st. Reduction of solid oxides by carburized gases. 2nd. Reduction of molten oxides by solid carbon; we shall examine the successive steps through which iron must pass to be changed from the primitive oxide to the condition of finished steel, and the appliances which permit the practical realization of these successive phases by deriving from electricity the heat necessary beyond that which can be furnished by the reducing agent used. For the sake of simplyfying our study, we will first consider the second case: reduction of molten oxides by solid carbon; for one part of this process can, without further description, be adapted to the first case.

The application of electricity as a source of heat for industrial purposes has for a long time been made on a large scale. In the following notes we may then pass over all the details of installation concerning the production of current of great power, leaving to electrical engineers the part which they have a right to claim. In order that, in this study, we may take into account the appliances which should be adapted to the exigencies of the electric current, we shall insist only on the following fact: electric energy is transformed by the interposition of a resisting body (similar to that used in incandescent lamps) into heat which may be utilized. The material which offers resistance, the gases, the oxides, the molten slag, charged with this heat, transmit it to the surrounding regions and to the metal produced. We should add that after this the principal difficulties met with in electro-metallurgy arise from the sticky state of the oxides at high temperature, and from the forms the appliances have to take in order to facilitate the reactions which should be produced in each phase.

FIRST PART.

Reduction of Molten Oxides by Solid Carbon.

Every metallurgic process, in order to be practical and of use industrially, should have an exact order in the succession of the steps which constitute it, and it should provide for the possibility of regulating the progress and the rapidity of each of these.

If the steps or successive phases take place in the same part of the same apparatus, the process is fatally discontinuous; if the phases take place in distinct parts of the same apparatus, or in different apparatuses, the process may be capable of either continuous or intermittent production.

Regularity of progress and continuity of production, when possible, are to be carefully sought after, and it is the pursuit of these two desiderata which, for the electro-metallurgy of iron, have led us to the complete apparatus, the general plan of which is represented by Fig. 1.

This general plan comprises three principal parts absolutely distinct from each other, each corresponding to one phase of the treatment:

A first apparatus (A) for the fusion of the ores.

A second apparatus (B) for reduction.

A third apparatus (C) for bringing the metal to the desired state ; this is the regulator, or Martin electric furnace.

The first two, A and B, are continuous in progress and production.

The third (C) is continuous in progress, but the tapping is intermittent, it being necessary to accumulate the metal produced, in order to be able to run it out in a large mass at a single casting. We should note here that this third apparatus, or regulator, forming a part of the whole, constitutes by itself alone an electric furnace, capable of replacing the ordinary Martin furnace.

Description of the Complete Apparatus.

A first part, or melting furnace.

1st.—The first part, in which the fusion of the oxides is accomplished, is composed of: (see Fig. 1, part A.)

A shaft (1) with circular horizontal cross-section, the axis of which is vertical, and with the interior walls widening out from the top to the bottom, in order to facilitate the descent of the charge, and to avoid scaffolding of the material; the section increasing more and more towards the base (in proportion as the charge becomes more pasty and sticky under increasing temperature.)

The holes (2) allow the ores, if necessary, to be worked in the interior of this shaft. They are closed by movable bricks when not required.

At its lower part the shaft (1) terminates in the smelting hearth ; number (3).

This consists of a chamber with circular cross-section, the arched roof of which is broken through in its centre by a large opening, which forms the continuation of shaft (1).

This chamber (3) is of much greater diameter than the lower part of the shaft, so that the oxides which almost fill shaft (1) may not completely fill the hearth, but leave at (4) an annular space for the circulation of the gases.

As a result of the gradual widening of shaft (1), and also of the form of the hearth (3), the ores are never jammed in the shaft; they spread out as they descend, leaving spaces for the passage of ascending gases. On reaching the hearth (3), they rest on the bottom, taking laterally their natural slope, and leaving the annular space necessary for the combustion of the gases which, from there, spread through the whole mass of oxides, and heat them while passing through them and finally escape by outlet (5). These gases, completely burned, have no value on leaving the melting furnace, and outlet (5) may be left entirely open, which facilitates the charging of the apparatus.

The bottom of the hearth (3) slopes from the back toward the second apparatus or reducer. This inclination is for the purpose of facilitating the running off of the molten oxides toward the reducer, and keeping them from escaping through the openings by which the carbons (6) carrying the current enter; these openings, it will be seen, are placed at the top of the inclined plane.

The fusion of the oxides in the hearth is produced by the gases which escape from reducer (7). These gases, in fact, are composed principally of oxide of carbon, and the heat which they give off, whether by their combustion, or by their cooling, is sufficient for the fusion of the corresponding oxides. On leaving the reducer by pipe (8), the gases form a blowpipe, with the air blown in at high pressure through the tuyere (9) and drives them in an incandescent state into hearth (3); on the slope they attack the oxides, already at great heat, melt them, then distribute themselves all through hearth (3), and especially in the free annular space (4), where their combustion is completed; from there they diffuse themselves through the porous ore, heat it progressively, and escape by outlet (5).

The gases of the reducer generally suffice for the heating and smelting of the oxides ; nevertheless, it is necessary to have at one's disposal a source of supplementary heat in the form of an electric current, for the purpose of:

1st.—Guarding against an insufficiency of heat produced from the gases alone.

2nd.—Regulating the fusion on the bottom of hearth (3).

This bottom is indeed very wide; the ore lies there on a large surface, and the blow-pipe, or blow-pipes (for several of them can be used) formed by the gases, acting more particularly on the surface of the slope, cannot, as a rule, melt the ores which rest on the bottom itself, or which are found at places more remote from the source of heat.

The electric current capable of furnishing supplementary heat for smelting is carried by two or several carbons (6), entering the furnace above the bottom by openings at the upper part of the inclined plane forming this bottom, but it may be introduced by vertical carbons or in any other way. It is well to distribute the current in such a way as to be able to heat the different parts where necessity may demand.

2nd.—The second part, in which the reduction of the oxides takes place, is composed of: (see Fig. 1, part B.)

A shaft (10) with circular cross-section, the axis and sides of which are vertical, and into which is charged at the top coke, charcoal, anthracite, or any other substance which serves as a reducer. This shaft is kept full for the purpose of exerting pressure on the coke in the lower part, and of forcing it out in the form of a column as far as the bottom of the reducing crucible.

The top of shaft (10) is closed by a charging apparatus (11), placed in such a way as to prevent any escape of the gases by this opening during the charging process, unless it is judged necessary to do so.

At the lower part shaft (10) ends in the reducing crucible or reducer (7).

This reducer (7) is a furnace with circular horizontal cross-section. The lateral walls are practically vertical, the bottom is sloped in the direction in which the substances are to run, that is, from the entering of the molten oxides to the escape of the metal and slag toward the regulator.

The roof is spherical or dome-shaped, and presents:

1. A large circular opening, forming a continuation of the shaft (10) and by which the reducing substance enters the crucible, forced in by the weight of the super-imposed material.

2. A second opening (8) by which all the reducing gases escape.

3. Further, one, two or more openings for the entrances of the electrodes, when it is considered desirable to convey the current through the roof.

The lateral walls of the crucible may have openings or doors for the purpose of examining or making interior repairs, and also openings for the passage of the electrodes, when it is considered expedient to introduce the current laterally; but they have at least two openings (12 and 13) for the running off of the crude metal and the slag. These two tap-holes are placed, either the one above the other on the same vertical plane, or rather a little separated on different verticals, but in any case both ought to be behind the column of coke descending from shaft (10), so that the slag and the metal may never escape without going over a thick bed of incandescent reducing substance. This placing of the tap-holes combined with the height of the column of material in shaft (10), which by its weight forces the reducing substance to pass down to the bottom of the crucible, insures a perfect reduction.

In crucible (7) the reduction of the oxides absorbs more heat than is produced by the transformation of the coke into oxide of carbon. It is, therefore, necessary to resort to the electric current in order to supply the additional quantity of heat required. This current can be brought by electrodes, such as (14) and (15), passing through the top near the slag, or by electrodes, either horizontal or, still better, inclined in position, crossing the lateral walls, and reaching the slag on the same plane.

Process of Reduction in Furnace B.

After the process has been in operation for some time, the crucible of the reducer shows in the lower part on the bottom a first layer of crude metal (16), then above this a layer (17) of oxides not completely reduced, and more or less mixed with a third layer (18), composed principally of slag. The coke remains lying on the bottom, below the shaft (10), but the fragments which are free on the surface, on the side towards the axis of the crucible, are raised by the metal or the slag, float in the liquid mass, scatter all about, and at last fill up all the lower part of the crucible up to the level of the slag (19-19); the whole liquid mass then circulates among the interstices left by the fragments of coke, as in the crucible of the ordinary blast-furnace.

The molten oxides which come from the hearth (3) fall on the mixture of coke and slag, and become reduced under the influence of the high temperature produced by the current; the gases escape through opening(8) in order to continue the fusion of the ores; the metal produced descends to the bottom; the slag, separated from the oxide, floats on the surface.

The discharge of the slag and the metal produced from the crucible may be effected by complete and alternative tappings. It is preferable to let the slag run off almost continuously, which is easily accomplished, as in the ordinary blast furnace.

3rd.—The third part (C) into which the reducer pours its crude metal, there to be refined and brought to the desired condition, is the regulator.

The "Regulator" represented in the general plan of the three apparatuses (Fig. 1) is further reproduced in detail in Figs. 6, 7 and 8 (see second part.)

Fig. 6 being a section of Fig. 8 along A.B.C.

Fig. 7 being a section along D.B.E.

Fig. 8 being the horizontal section of the preceding.

It is composed of a chamber or laboratory (20), with circular section, presenting: a door for charging (21); a channel (22), by which it receives the crude metal coming from the reducer; a tap-hole (23) for the metal (24); a tap-hole (25) for the slag (26).

The heating is accomplished by electricity transmitted to the liquid bath by two electrodes (27) passing through the top or through the lateral walls. These electrodes, which carry the current, may be either vertical or inclined in position.

Figs. 6, 7 and 8 show the arrangement which appears to us to be the best for the metallic enclosure of the regulator, and for the refractory lining; it is well to draw attention to this arrangement of the metallic enclosure, the circular form of which is characteristic, allowing a very simple, economical, strong construction, and reducing the running expenses to a minimum, owing to the strength which this arrangement gives to the refractory lining; the lower part of the furnace, of sheet iron, rests flat upon the ground, and cannot be deformed; the vertical enclosure is a cylinder of sheet iron, strong from its very form, and further reinforced at its two extremities; at the bottom by its being joined with the sheet-iron plate; at the top by a wide hoop (30), (Figs. 6 and 7), designed to support the whole thrust of the arched roof.

The roof consists preferably of a single piece of refractory material. If one considers the purity of the steel and its complete separation from the slag, the immobility of the regulator, with its discharge for the metal below, presents a great advantage over the Bessemer converter, the oscillation of which and the fact that the discharge is above, are perceptible causes of variation in the composition of the steel. All people of the trade know, in fact, the bad effect of slag mixed with steel, whether in an infinitesimal form, when it arises from direct oxidation of the metal, or in the form of almost imperceptible droplets scattered by agitation through the sticky mass from which they cannot be separated. For special steels, and steels of great purity, which should be expected of electric smelting, it is essential to avoid stirring the metal falling on the slag; such as occurs when the contents are poured out from the mouth of the converter; and if it is not possible to obtain the sharp separation which is obtained in the crucible, we must at least seek means of pouring which will allow the largest mass of metal to be run into the ladle before letting any slag into it.

Refining Process in the Regulator.

The refining in the electric regulator resembles that of the Martin furnace; it differs from it, however, in several points, which it is interesting to set forth in a general way before examining the process of an isolated operation:—

1st.—The regulator, with circular horizontal section, facilitates very much the work of the operator on account of its simplicity, the resistance of its metallic enclosure, and of its refractory lining.

2nd.—The high temperature which is made use of, and its direct application to the mass which is to be heated, enable reactions to take place which are almost impossible in the Martin, where the maximum of heat is deflected toward the walls, which resist with difficulty.

3rd.—The means used in the Martin for the refining and purifying of the crude metal are:

For oxidizing processes: on the one hand, oxygen, with the carbonic acid and aqueous vapor, which are unfortunately contained in the gases of the furnace, and the proportions of which are not variable at the will of the operator; on the other hand, oxides of iron, oxides of manganese, lime, and other additions, regulated at will.

For reducing processes: on the one hand, all substances having affinity for oxygen, silicon, manganese, aluminium, sodium, &c., it being possible to add these to the bath in the pure state, or in the state of ferro compounds.

The refining in the electric regulator can take advantage of all these agents, but the oxygen, carbonic acid and aqueous vapor, which it can utilize, are fortunately not forced upon it, and this alone makes an enormous difference in the process of refining, and in the results which are to be expected.

We should point out, in the next place, that all these questions are very important, and that their study shows the essential character of questions of a purely metallurgic order in the investigation which we are pursuing, electricity entering only as heat-producing agent.

Let us consider, for instance, the case of the removal of the carbon contained in the crude metal.

The decarburization may be produced practically by oxygen, carbonic acid, aqueous vapor, metallic oxides, and especially by oxide of iron, oxide of manganese, oxide of calcium, &c.

It is interesting to compare the decarburization of iron by the oxygen of the air and by the oxides of iron or ores.

The two modes of operation differ entirely in the final result:

The oxygen of the air, driven to the surface or to the interior of the liquid metal, burns at first the greater part of the elements more easily oxidizable than iron, among others the carbon, but before all the carbon is removed, it acts already on the iron, either by dissolving in the metal, or by combining, and thereby gives rise to an infinite number of particles of oxides imbedded in the metallic mass, where their action becomes injurious; the metal then becomes hot-short, and if one examines a break by tension, one finds generally the appearance called " wood fracture."

Oxide of iron in the state of ore acts on carbide or iron in a less active manner, retaining oxygen by its combination, and burning only the carbon with sufficient energy to destroy this combination.

Decarburization by oxide of iron gives a better steel; it is necessary then to avoid direct oxidization by atmospheric air, when the quality of the product is the first essential; hence the inferiority of the Martin to the electric regulator, which can have air introduced if it be judged advisable, but which is not inevitably always present.

The superiority of the regulator is demonstrated again very clearly, when it is a question of producing a reducing action, desulphurization, for example; the gases floating above the metallic bath are naturally these reducers, if no other oxidizing agent is introduced from without, and the elimination of the sulphur can be easily brought about, while it is almost impossible in the Martin.

The Refining Operation.

The refining process varies according as the operation is performed on the crude metal alone coming from the reducer, on a mixture of pig and scrap, or on scrap alone.

Let us examine the first case; the others offer no additional difficulties.

In connection with the reducer B (see second part, Fig. 1a), two regulators may be employed, into which the crude metal flows regularly in proportion to its production; one of the regulators receives the metal (filling up), while the other brings the refined metal to the desired hardness and composition.

This arrangement of two regulators for one apparatus supplying the crude metal is shown in Fig. 1a (see second part).

Let us suppose a single regulator with basic lining; the crude metal is allowed to accumulate in the crucible of the reducer (B) till a time when tapping becomes possible.

Knowing the approximate composition of the crude metal, and the weight of the charge which is to be operated on, all the ore necessary for decarburization may be placed beforehand on the bottom, if, in order to obtain a better quality of metal, one does not require part of the oxidization to be accomplished by a jet of forced air.

The crude metal, which we suppose to contain little sulphur, is poured out in such a way as to fill rapidly the regulator up to about 10 centimeters below the level allowed for the outflow of the slag by pipe (25);

then the crucible of the reducer (B) being empty, the hole is left open in order that the crude metal, in proportion as it is produced, may for some time continue to flow into the regulator. The slag coming from reducer (B) should be drawn off before it reaches the regulator, as is regularly done with the slag of ordinary blast furnaces. The refining begins at once under the influence of electric heat and of the ore, which changes the carbon of the crude metal into oxide of carbon; gradually the slag, which is formed, reaches the height of pipe (25), through which it flows out, its level being raised gradually by the crude metal continuing to flow to the regulator.

The carrying off of the slag in this manner is much simpler than in the Martin.

The crucible of reducer (B) is closed when the regulator is filled with the desired quantity, and the refining now goes on to completion.

Tests taken indicate the state of the metal and by additions, either of ore, or of carburetted substances, the required point is reached. It is desirable then to leave the metal absolutely motionless for some time, to bring about its reactions, and to separate it gently from the slag; tapping is then done as in the Martin, first into a ladle, then into conical ingot-moulds, where it is compressed by a process similar to wire-drawing, in order to avoid use of the reheating chamber.

If, instead of a pure carbon steel, it is desired to have the finished metal contain other elements having a definite influence on the nature of the steel, the operation is the same as in the Martin, with this difference, however, that there is less loss, the atmosphere above the bath and the bath itself having no oxidizing influence.

If in place of a relatively pure crude metal, a considerable percentage of sulphur is present, the operation should be modified by the addition of a reducing phase with slag, extra calcareous, or manganesian. This phase might take place after decarburization, but it is more natural to desulphurize at the beginning. Before the tapping of the crude metal, there would then be placed on the bottom of the regulator a desulphurizing slag in place of oxidizing ore. The addition of ore would be made only after the tapping of this desulphurizing slag.

As to the nature of the steels produced in the regulator, it may be any whatever; all the additions of special substances are possible, and in all these cases the quality of the product will be superior to that produced in the ordinary Martin furnace, owing to the facility of maintaining above the bath a non-oxidizing atmosphere.

To sum up, the process which has just been described, of passing directly from crude ore to refined iron, or to different classes of steel, is characterized by a preliminary fusion of the oxides, followed by a reduction, then by a refining of the metal, each of these three operations being done in a distinct apparatus, but the three apparatuses, like the three operations, being combined in such a manner as to form three parts of one single whole, the calories necessary to the three operations being supplied in part by the reducing matter, and the supplementary heat by three sources of electricity, one for each operation, which allows the use of currents of relatively low intensity.

We have shown the regulator (C) as being intimately connected with the two other apparatuses (A) and (B), but if necessity requires (B) may be left to produce the crude metal, the pig-iron, and (C) may be separated, treating directly in it entirely different substances.

Economic Consideration of the Triple Furnace.

It is interesting to study, at least approximately, the economy of the process, and to endeavour to emphasize more particularly:

1st.—The utilization of the calories.

2nd.—The electric energy required per ton.

3rd.—The net cost compared with that of ordinary steel works.

1st. The Utilization of the Calories.

1st.—Let us suppose a charge to contain per ton of pig iron:

Silica	190 Kgs.	=1,944 Kgs. of oxides to be melted
Aluminium	32 "	
Lime and Magnesia	340 "	
Iron	935 "	
Manganese	17 "	
Oxygen of the ores	430 "	
Water	126 "	to be evaporated.
Carbonic acid of the carbonates	250 "	to be separated and volatilized.
Total	2,320 Kgs.	

which ought to give, after calcination, fusion and reduction:

On the one hand, 1,000 kgs. of pig iron or crude metal.

On the other hand, 570 kgs. of slag.

Of which 535 kgs. are derived from the charge properly so called above, and 35 kgs. from coke or other reducing matter.

2nd.—The pure carbon or reducing agent to be placed in shaft (10) per ton of pig iron will be 325 kgs., to change into carbonic oxide the 430 kgs. of oxygen contained in the ore, say, 360 kgs. of coke, allowing for about 10% of ash. This coke adds 35 kgs. to the weight of the slag to be melted.

3rd.—Before determining the schedule of calories, it is necessary to ascertain the losses by radiation in each part of the triple furnace.

Mr. Gruner allows for loss by radiation in the ordinary blast furnace 444,000 calories per ton of pig iron. The present apparatus, presenting relatively more surface, will lose at least as much, let us take, in round numbers, 450,000 calories, which will be distributed almost in equal proportion among the three parts of the apparatus, say, 150,000 for each.

Schedule of Calories in Smelting Furnace A.

Calories necessary for the calcination and fusion in shaft (1) and melting chamber (3):—

	Calories.
For vaporizing 126 kgs. of water given off at the throat at about 100°:— 126 x 606	76,356
For dissociating 250 kgs. of carbonic acid from the bases with which it was combined (250 kgs. of carbonic acid correspond to 568 kgs. of carbonate), say, according to Gruner: 568 x 373.50	212,148
For heating these 250 kgs. of CO_2 to the temperature at which gases are given off, 100°, say:— 250 x 0.21 x 100	5,250
For heating to 100° the 2,100 kgs. of air necessary to change into CO_2 all the CO produced by 325 kgs. of carbon, say, 2,100 x 0.227 x 100	47,670
For heating to and melting at a temperature of about 1,500° the 1,944 kgs. of various oxides corresponding to one ton of pig iron, and admitting (according to Gruner, pp. 337, and following of vol. 2) that the calories contained in 1 kg. of oxides or slag melted at 1,500°, are 500 calories, say: 1,944 x 500	972,000
For external radiation	150,000
Total calories necessary in the smelting apparatus	1,463,424

Production of necessary calories in shaft (1) and furnace (3):

The CO arising from reduction, and corresponding to 325 kgs. of C, weighs 758 kgs.; it reaches 1,500° in the smelting apparatus, where it gives off:—

	Calories.
1st.—By its combustion: 758 x 2,400	1,819,200
2nd.—By the lowering of its temperature from 1,500° to 100°: 758 x 0.24 x 1,400	254,688
Total calories given off in the smelting apparatus by the CO	2,073,888

This number being greater than the calories necessary in the smelting apparatus, the electric current directed along the base of melting chamber (3) will be in operation only in case of incomplete combustion of the CO, and in case of an irregular descent or melting of the ores.

Schedule of Calories in the Reducing Apparatus B.

Calories necessary for reduction:

For reduction (according to Gruner, vol. 2, p. 339), the heat absorbed for reduction corresponding to 1 kg. of pig iron, is 1,984 calories. Say, then:—

	Calories.
1,000 x 1,984	1,984,000
To heat to 1,500° the 325 kgs. of reducing carbon, say: 325 x 0.24 x 1,500	117,000
To melt the 35 kgs. of ash, say: 35 x 500	17,500
For radiation	150,000
Total calories necessary	2,268,500

Production of calories necessary for reduction:

	Calories.
The 325 kgs. of C changing into CO by reduction give off: 780,000	780,000
The calories necessary being 2,268,500, electricity should supply the difference, say	1,488,500

Schedule of Calories in the Regulator C.

Calories necessary for refining:—

	Calories.
To bring the crude metal from 1,500° to 1,800°, say: 1,000 x 0.12 x 300	36,000
To make and melt about 300 kgs. of slag, say:— 300 x 500	150,000
To compensate for the different reactions which are produced slowly, and the calorific effect of which cannot well be defined	200,000
For radiation	150,000
Total of necessary calories	536,000

Production of calories necessary for refining:

	Calories.
The production of the necessary calories is to be derived entirely from electricity, which should furnish 536,000 calories, say	536,000

General Schedule.

The general schedule is established as follows:—

	Calories necessary for 1 ton of metal.	Calories given off without electricity.	Calories to be derived from electricity.
1. Melting apparatus......	1,463,424	2,073,888	....
2. Reducing "	2,268,500	780,000	1,488,500
3. Refining "	536,000	....	536,000
Totals................	4,267,924	2,853,888	2,024,500

2nd. Electric Energy Necessary per Ton of Steel.

It is interesting to calculate in horse-power the electric energy employed in each of these apparatuses.

1st—In the melting apparatus electricity plays only a secondary part, useful only as a regulator of heat.

2nd—In the reducing apparatus electricity ought to furnish 1,488,500 calories for each ton produced, and if we have in view the production of one ton per hour, it is necessary to have per second:

$$\frac{1,488,500}{3600} = 413 \text{ calories}$$

or, in theoretical horse-power:

$$\frac{413 \times 425 \text{ Kg./m.}}{75} = 2340 \text{ horse power}$$

3rd—In the refining apparatus electricity should furnish 536,000 calories, and if we have in view the production of one ton per hour, there will be required per second:

$$\frac{536,000}{3600} = 150 \text{ calories (about)}$$

or, in theoretical horse-power:

$$\frac{150 \times 425 \text{ Kg./m.}}{75} = 850 \text{ horse power (about)}$$

say, about 1,000 horse-power, because bringing the metal to the desired state entails loss of time corresponding to loss of heat.

3rd. Net Cost Compared.

It is interesting to make, from an economical standpoint, a comparison between the new process and those in actual use for the manufacture of steel, allowing for coke the price of 25 frs. per ton, and for 1,000 electric calories the price of 0.01 frs.; these prices are almost exactly those actually existing in the region of the French Alps.

In the triple furnace we produce one ton of finished steel with:

	Frs.
360 kgs. of coke, at 25 frs. per ton	9.00
2,024,500 electric calories, at 0.01 frs. per thousand	20.24
Total	29.24

We replace these 29.24 frs. by: 1st. the coke of the ordinary blast furnace, say, 1,000 kgs., and all the machinery (boilers, engines, hot-air appliances) necessary for its combustion. 2nd. The coal used in the Siemens-Martin furnaces, say, about 500 kgs. on the average, at 25 frs. per ton.

	Frs.
1,000 kgs. of coke, at 25 frs. per ton	25.00
Machinery at the blast furnace	5.00
Coal, 500 kgs. at 25 frs. per ton	12.50
Total	42.50

While admitting that the new process entails the same amount of labor and the same accessory machinery as the old blast furnaces and the Martin-Siemens' hearths combined, we see that it produces steel at a saving of 42.50 — 29.24, say, 13.26 frs. per ton.

Competition with the old process is, therefore, possible.

The reduction of solid oxides by carburetted gases, with supplementary calories produced by electricity, will form the subject of a second part.

TREATISE ON ELECTRO-METALLURGY OF IRON.

BY

HENRI HARMET.

SECOND PART.

TREATISE ON ELECTRO-METALLURGY OF IRON.*

BY HENRI HARMET.

SECOND PART.

Reduction of Solid Oxides by Carburized Gases.

I.—General Considerations.

The ordinary blast furnace is a perfect apparatus for reducing solid oxides by means of carburized gases, when the heat necessary for the different reactions is produced by the reducer itself; the fuel being charged in a solid state, and changed into reducing gas by partial combustion, under the influence of the air in the lower part of the apparatus.

In seeking to produce the same reactions by using the electric current for the production of the necessary heat, without referring to the calories furnished by these reactions themselves, it is natural to think at first of using the old form of the blast furnace, by conveying to the crucible sufficient electric energy to replace the calories which the combustion of the solid fuel would have given, and by introducing through the charging orifice the quantity of reducing material strictly necessary for reduction. But two very decided objections to this course are encountered.

The first is, that reduction will not take place under the influence of the reducing agent, which is solid and which remains solid, or at least the reduction will be very imperfect.

The second is, that if reduction could take place in presence of the solid reducer, this action would still be prevented by the lack of the necessary temperature; the excess of electric heat in the smelting crucible being unable to ascend into the upper parts of the shaft, owing to the lack of a conductor, or of a medium having a tendency to rise, and possessing the property to take up heat in the lower part of the furnace, which heat it would give off in the upper part.

---

* From the French.

Therefore, the application of electricity as a source of heat in a reducing and smelting apparatus, such as the old blast furnace, requires a radical modification in the form and in the running of the apparatus.

It is not only sufficient to replace by electricity the action of coke. which formerly supplied the supplementary and indispensable heat; but it is further necessary: 1st. To give to the calories which the electricity is to produce in the crucible the power of ascending in the shaft at least in part. 2nd. To change the reducing carbon, which we still charge in a solid state through the furnace-top, into a reducing gas, since in a solid state it cannot act.

Further, if we take into account the conditions required by the pasty state of the ores, and by general economy, we reach the arrangement represented by Figures Nos. 1, 1a, 2, 3, 3a, 4, 5, 6, 7 and 8.

This complete apparatus utilizing electric calories, and converting raw ores into finished steel will be, as a whole, designated by the name: "*Electric furnace for the electro-metallurgy of iron or its compounds*"; the different parts of the plant will have distinct names, such as are given in all metallurgic apparatuses.

II.—Description of the electric furnace for the electro-metallurgy of iron or its compounds.

The electric furnace comprises, as a whole :—

1st. A first part, where are performed the drying, roasting and calcining of the oxides, or other substances charged in the crude state; we shall call it the "Calciner."

2nd.—A second part, where the reduction of the oxides and the fusion of the more or less crude metal are accomplished; we shall call it the "Reducer."

3rd.—A third part, into which the crude metal flows in a liquid state from the reducer, and is there brought to the desired point; we shall call it the "Regulator."

Fig. No. 1 and Fig. No. 1a are general plans.

Fig. No. 2, a horizontal section through the axis of the electrodes, through the axis of the tap-holes for the metal and the slag, and through the axis of the holes for the insufflation of gases.

Fig. No. 3, a vertical section on XY through the axis of the reducer, through the tap-holes for the metal, and one of the tuyeres.

Fig. No. 3a, same section on a larger scale, showing the lower part of the apparatus.

Fig. No. 4, a vertical section on ZO, through the axis of the reducer, through the tap-hole of the slag, and the second tuyere, so far as concerns the reducer, and falling on Z'O' in the calciner.

Fig. 5, a vertical section of the lower part on UV, through the axis of the reducer, and through the axes of the two electrodes.

Figs. 6, 7 and 8 give the details of the regulator.

To describe the process of metallurgy, and the apparatus which permits its application, we shall follow progressively the different phases from the charging of the ore to the tapping of the steel.

Operation of the Apparatus and General Conduct of the Process.

1.—Calciner.

All the raw materials, except the coke, are placed in shaft (1) of the calciner in the desired proportions and in successive chargings. Owing to the heat furnished by the blow-pipes (2), and because of the form of the calciner, these substances become gradually heated, reaching a red heat in the narrow part (3), and are calcined, losing successively hydroscopic and combination water, carbonic acid, and all volatile matters. They sink down and, still red hot, reach the base (4) of the calciner, where a plunger (5), with alternating movement, feeds them at the desired rate of discharge into chutes (6) or (7), whence they pass to "chargers" (8) or (9).

To obtain this result, the interior of the calciner presents the form shown by the vertical section (Fig. 4). This form is widened out in the upper part in order that the substances may heat slowly, as is suitable for drying; it is narrowed half way up in order to give great increase of heat, and so that the substances may attain a uniform temperature; then, again, gently widened below, in order to allow the charged materials to assume their natural slope and leave a space (10), to allow for the combustion and distribution of the gases escaping from blow-pipe (2).

The base (4) may be inclined or not but for economical production in the calciner, and in order that its progress may be continuous with that of the reducer, it is necessary that the substances, which reach base (4) at a red heat, should flow out proportionately and regularly into chargers (8) or (9), giving place constantly to new descending material. For this purpose, there is placed, externally, a shaft attached to a wheel (11), giving an alternating movement back and forth to a cast-iron plunger, which penetrates, by an opening (31), of the same diameter, into the calciner, a short distance above base (4). At each alternate movement, this plunger drives a certain quantity of calcined substances into chutes (6) or (7), and the proportion of these substances thus discharged in a definite time varies with the speed of piston (5), and with the number of revolutions made in this same time.

The calciner shows around its crucible, or lower chamber, several openings, which are without any communication with the outside atmosphere; the openings (2) by which the gas blow-pipes penetrate; opening (31) for the action of plunger (5); opening (29). leading to the chutes (6) and (7).

These openings do not allow the gases resulting from the action of the blow-pipe to escape, and all the rest of the lower chamber being closed, these heat-imparting gases are forced to take an upward course through the substances above, heating them, and finally escape by the top.

This closing in of the crucible is characteristic of this calciner.

The valve (13), pivoting on its axis (14), allows the substances escaping from the calciner to be directed alternately into one or other of the chargers (8) or (9), through chutes (6) and (7). These chutes are conduits, inclined in order to facilitate the sliding of the substances, but they are completely closed except at the two ends, where they lead, on the one side to the calciner, on the other to the chargers, without having any communication whatever with the external atmosphere.

The charger (No. 8, for example) is a metallic chamber, lined with fire-bricks in the interior, and may be closed above and below by slide-doors (15) and (16).

Pipe (6) connects this charger with the lower chamber or crucible of the calciner, and when valve (13) is turned as Fig. 1 indicates, the slide-door (15) being open and (16) closed, the calcined substances fall into charger (8) in proportion as they are forced by plunger (5).

When charger (8) is full, valve (13) is turned in order to make the calcined substances flow into charger (9); then, slide door (15) is closed, and on opening (16) all the contents of (8) fall into the reducer.

The next charging will come from charger (9) through a similar process.

This arrangement of the two chargers allows the substances coming from the calciner to be kept heated, and to be brought into the reducer without any perceptible loss of the gases through the opening, because of the slide-doors (15) and (16).

As the reducer is the part of the plant which requires the greatest amount of supplementary heat from electricity, it is a great advantage to charge it, through its opening, only with calcined and hot substances. The ores and fluxes come from the calciner, calcined and heated; the reducing carbon, (generally coke), passes through heater (17), where it is subjected to the heat produced either by the flames escaping from the " regulator," or by one or several blow-pipes fed with gases collected at the top; the coke thus loses its humidity, and by the aid of doors (18) and (19), it is made to fall into the reducer by successive charges, in a manner similar to that described for charger (8).

Chargers (8) and (9) and heater (17) supply through the opening of the reducer, ores, fluxes and coke in the desired proportions, and at a high temperature, after drying and calcination.

2.—Reducer.

All the materials thus charged descend mixed, in the interior of the reducer. During the descent the oxides are reduced; then, in the crucible the whole assumes a molten condition. The metal and the slag separate, the metal flowing on the one side into the regulator, and the slag flowing out on the other side as waste.

To reach this result by the use of supplementary heat produced by electricity, it is necessary that this reducer should have special features.

We shall examine successively the descent, the reduction, then the fusion, stating precisely the characteristic features which are recognized as being necessary for carrying on successfully each of these operations.

Descent of the substances.

The materials charged hot in the furnace-top increase in temperature; slowly at first, because of the reduction which absorbs the heat; but lower down the heat increases, and the minerals, having become sticky would have difficulty in descending if the shape of shaft (28) did not facilitate their movement. It is necessary that the section of the shaft should become larger according as the descending materials become warmer, more pasty and sticky; hence the widened form indicated in (Figs. 3, 4, 5) by curves M and N. These lines, widening gradually from the top to the bottom of the shaft of the reducer, are a characteristic of the apparatus.

Reduction.

The reduction of the oxides should take place in the shaft or upper part of the reducer; the fusion alone occurring in the crucible, or lower part.

Now, the solid oxides, mixed with the solid coke, react on each other but slowly, and the reduction could not be completed by the time the materials reach the zone of fusion if there were not brought into the shaft a reducing gas, oxide of carbon, causing the reduction to take place where it should, that is, in the shaft itself.

For this purpose a certain amount of the gases, which are given off from the furnace top, is introduced into the interior of the reducer, and rises upwards through the solid material. These gases, the greater portion of which is oxide of carbon, are drawn through flue (32) by the blowing engine (33), and introduced at high pressure through flue (34) into the crucible, a little above the slag, which they reach by outlets (35) and (36). These gases, meeting in the crucible and above it incandescent coke, are completely converted into oxide of carbon (the CO_2 giving

2, CO); they thus become an exceedingly active reducing agent, and develop this action in the shaft, where we wish the reduction to take place.

We note as a characteristic of the process this piping of the gases at the furnace-top in order to blow them into the crucible, to change them completely into oxide of carbon, and to produce with them a very strong reducing action in the shaft.

The gases taken at the furnace-top and introduced in this way still serve another purpose.

If we admit, as should be the case, that the materials which descend in the shaft reach the crucible completely reduced, they will be incapable of giving off any gaseous ascending matter. If, again, we observe that the electric current transmits its heat to bodies which offer a resistance to its passage, without, however, producing gaseous emanations, we recognize that the calories thus given off by electricity in the crucible would have no rapid means of entering the shaft where we require them to help in the reduction. Some means are then needed to transmit to the shaft a part of the calories which the electric current gives off in the crucible. The gases taken at the furnace-top and blown into the crucible constitute this means which we need of conveying the calories.

In order that the circulating gases introduced into the crucible may penetrate the ore and reach all the fragments to be reduced, there must be a large surface presented to their action; they must be able to circulate freely around the column of ore, and fill all the interstices which they can enter; it is for the purpose of facilitating this infiltration of the insufflated gases that the crucible of the reducer shows on its lateral walls the widened form indicated by Figs. 3, 4 and 5, leaving in (36) an annular space where the gases are collected, in order that, from there, they may penetrate the column of solid material.

In order that the gases, blown into the annular space (36), and from there into the column of solid materials, may bring about reduction in all parts of the shaft we must facilitate their ascent through the middle of the solid column by grouping in the centre of this column most of the large pieces, which will have between them wider spaces than the small ones for the circulation of the gases; it is for this purpose that at the furnace-top, the coke is charged in the centre, and the ore at each side; the slope formed by each charge of ore brings the larger pieces to the centre.

We should also note that the shape given to the shaft, with horizontal cross-sections increasing from top to bottom, is well suited for the purpose of reduction. Reduction, indeed, absorbs heat and requires that the oxides and reducing agents should be in close contact, and besides, the circulating gases, which ascend from the crucible, bringing with them reducing energy and calorific energy, require, in proportion as they weaken, to concentrate their remaining energy into spaces more and more limited.

This shape, widening from the top to the bottom, is then equally important for successful reduction.

Fusion and Special Features of the Crucible.

Fusion is one of the principal operations of the crucible, but it should also: 1st. Supply the supplementary heat which the circulating gases are to carry up into the shaft. 2nd. Allow the development of all these calories by the electric current. 3rd. Separate the crude metal from the slag. 4th. Allow the crude metal and the slag to flow out, either continuously or by small successive tappings. Each of these operations requires for the crucible special features, which are so many characteristics of the apparatus.

The development of heat for fusion in the crucible, and of those supplementary calories to be conveyed into the shaft, requires great electric power; and if the production is to be relatively great, it is well to divide the total electric energy considered necessary, in order to avoid the difficulty of transmitting by one single electrode currents which are too intense; it is necessary, then, to have for the crucible a diameter which is large compared with the upper shaft, in order to have room to place on the circumference a large number of electric conductors, and for this additional reason, we would have had to give to the crucible the widened form represented by Figs. 3, 4 and 5, if we had not been obliged to do this for the circulating gases. This widened form of the crucible is then emphatically a characteristic of this reducer.

The total electric energy may be applied by a single set of electrodes, or may be divided up into a great number of distinct currents; we consider it preferable to divide up the energy, and the crucible of the reducer is so arranged as to allow for this division. Fig. 2 shows a desirable mode of placing the electrodes (37) for four distinct currents, although any other division may be adopted.

In order that the electric energy (transmitted by one or several distinct currents), may develop in the crucible all the heat which it is capable of producing, the electrodes must remain constantly in contact with slag (38) if regularity in the production of heat is desired; the slag, offering resistance, will absorb the calories to transmit them, on the one hand, to the crude metal which drips through it from above and accumulates below; on the other hand, to the circulating gases which, impelled by their velocity, play over the surface of the liquid bath.

In order that the electrode may come in contact with the slag without having an exaggerated length, it is necessary that the opening by which it enters the crucible (Fig. 5) should be a short distance from the base of the crucible. It is well also that this opening should be, not in the vertical walls, but near the top of the crucible, in order to give it a position as nearly vertical as possible, such a slope being advantageous in order to more easily reach the slag at its different heights. Consequently, the upper edge of the crucible (or point B) should not be far distant from the floor; as a result of this, the whole crucible takes a form with low vertical walls, which, together with its relatively great horizontal width, gives it a depressed form, as represented by the section in Fig. 5.

In order that the electrodes may remain almost constantly and evenly in contact with the slag which produces the heat by the resistance which it offers to the current, it is necessary that the variations in the height of this slag should be but slight, and if they occur at all they should do so but rarely.

This condition is fulfilled: 1st. By a crucible with a wide horizontal cross-section, in which the variations in the height of the liquid bath are less perceptible. 2nd. By making the tappings for both slag and metal as constant as possible, and when it is necessary to drain the crucible of all the metal, small tappings should be resorted to in such a manner as to render the variations in height as small as possible.

The separation of the slag (38) from the metal (39) and the continuous discharge of each of them when possible are obtained by arrangements as shown in Figs. 3 and 4.

For the metal (39), a heap of bricks or sand (40), forming a casing for the fore-hearth (41), gives the means of regulating the height (H) of the channel by which the crude metal will flow out constantly, and in proportion as it is produced, into the regulator (20); this height (H) regulates the level (S.S.) of the crude metal in the interior of the crucible, taking into account the pressure exercised by the slag and the gases.

For the slag (38) a constant flow with a Lürmann pipe (42) and a constant level (R.R.) are obtained in a way similar to that which is employed for the metal.

These arrangements are very important to secure an almost constant level for the slag.

The thickness (K) of the slag (38) above the metal (39) should be kept sufficiently great to allow the carbon to have considerable variation in height without being unduly exposed either to penetrate the metal or leave the slag.

To insure a regular and economical working of the reducer, such as is described above, it is necessary further to prevent any entrance of air, and to keep constantly under pressure the gases contained in the interior.

For this purpose, at the top of the reducer two openings are designed for the escape of the gases of the furnace-top; they are distinct, separated from one another, and placed for example, one at each extremity of the same diameter (see Fig. 3).

The one (43) is designed for the circulating gases which, from there, pass into flue (32), and are introduced by the blowing engine (33) into the crucible (44), to eventually return to the furnace-top.

This circulating movement can neither bring in any air nor change the equilibrium of pressure established at the furnace-top.

The other opening (45) is appropriated to the gases which definitively leave the furnace-top. To avoid an out-going current through this opening (45), which might induce a return current of air, the escaping gases are made to pass through a box (46), and can only escape by valve (47), into conduits (48) and (49), by raising this valve (47), which establishes for them a constant pressure in the whole space included between this valve and the shaft of the reducer. Valve (47), which is fixed to the movable cap (50), is raised with it when the pressure of the gases is sufficient; it is closed when the pressure is lowered. The pressure desired in the gases is regulated by the difference in level of the water in the channel which forms joint (51), and this difference in the level of the water is established by the height of the overflow-syphon at point (52).

This arrangement keeps the pressure of the gases at the furnace-top constant, and prevents any return current of air in the reducer.

3rd.—Regulator.

On leaving the reducer the metal flows directly into the regulator (20), where it is brought to the desired composition.

The regulator is represented in detail by Figs. 6, 7 and 8, but we need not repeat the description given on pages 129 and 130 of our first part.

The above description, although very short, explains sufficiently the working of the apparatus, and the course of the operations for changing crude ore into finished steel.

It appears to us unnecessary, for the present to enter into greater technical details, but it is essential to study the general economy of the process.

III.—General Economy of the Process.

1st.—Nature of the gases escaping free at the mouth of the reducer; charges and methods of operating.

Examination of Gases Leading to Two Methods of Procedure.

Before proceeding to discuss the economy of the process, it would be interesting to examine the reactions which take place in the different parts of the apparatus, but we shall be as brief as possible, returning to this question later on.

The reactions in the calciner differ little from what is already known, and we shall not mention them.

Those which take place in the regulator are very complex, and are briefly indicated in the first part, pages 130-134; a more detailed study would be a lengthy piece of work which we cannot at present undertake.

There remain the reactions which take place in the interior of the reducer. These comprise:

1st.—The new phenomena, which in a regular working will, perhaps, in spite of all provisions, accompany the fusion of the metal, and of the slag, under the direct influence of electric heat; long experience alone will determine which of these phenomena can be avoided with a specified kind of ore, but at present we should recognize that, in the crucible of the reducer, it is better to demand from electricity only the energy strictly necessary for accomplishing the fusion of the crude metal with the smallest possible quantity of substances foreign to iron; and we shall ascribe to the regulator the function of bringing the steel to the desired composition by using electricity, the introduction of which at this point may permit of achievements hitherto unknown.

2nd.—The phenomena which accompany reduction proper under the influence of carburized gases; these phenomena have for a long time been the object of study on the part of metallurgists, more particularly of Messrs. Ebelmen and Gruner; we shall refer to these phenomena only in passing.

3rd.—The modifications brought about in the reducing gases by the very fact of their forced circulation; this last point alone seems to us at present worthy of examination.

The electric furnace presents, in its operation, an elasticity and a broad range, from which much advantage can be derived. Its method of operating varies, according as we attempt to use more or less completely in the reducer itself the heat-giving energy of carbon, by transforming it into CO or CO_2. Let us examine the two extremes, though all the variations between these may be adopted.

1st.—The one aiming to produce CO is characterized by a greater consumption of electric energy, and by a greater charge of the reducing carbon; nevertheless, this method remains the most economical, because, using in the reducer only a small portion of the energy of the carbon, it transforms this completely into pure CO, thus giving it a greater value at the cost of electric energy, the calories of which are more economical with the great hydraulic plants which are used for their production. This process makes of the reducer a better gas-producer than any other known.

2nd.—The other aiming at producing CO is characterized by a diminution of electric calories, but a greater development of calories arising from the carbon, which, in the shaft of the reducer, is changed on a large scale into CO_2; this reaction gives rise to more calories than simple conversion into CO, although the volume of gas developed is less; the CO_2 has no further latent power of producing heat and is allowed to escape to the outside.

Composition of Charge.

Let us apply these two extreme methods to the same composition of charge, the material used varying only in the quantity of carbon, and we shall take the charge already adopted in our first part (page 134), which contains per ton of crude metal:—

Silica	190 Kgs.	1947 Kgs. charged into the reducer.
Alumina	32 "	
Lime and Magnesia	340 "	
Iron	935 "	
Manganese	17 "	
Oxygen of the ore	433 "	
Water	126 "	376 Kgs. eliminated by calcination.
Carbonic acid	250 "	
Total	2,323 Kgs.	2,323 Kgs.

The total should give, after calcination, fusion and reduction, on the one hand:

1,000 kgs. of pig iron or crude metal to pass into the regulator.

On the other hand: 535 kgs. of waste slag. To these 535 kgs., coming from the charge, we should add the ash from the coke, or as we shall see later:

With the first method of proceeding, equals 35 kgs. of ash, giving 570 kgs. for the total slag.

With the second method of proceeding, equals 25 kgs. of ash, giving 560 kgs. for the total slag.

2nd.—First Method of Proceeding.

Examination of Gases Produced in the First Method of Procedure.

(Production of pure CO.)

We aim at changing all the carbon into oxide of carbon, which can be utilized as combustible gas, outside of the reducer, after having accomplished complete reduction.

To change into CO the 433 kgs. of oxygen of the ore, we require 325 kgs. of pure C, or 360 kgs. of coke; the total weight of CO produced is the sum of the two, equals 758 kgs., and there will be no other gases in the reducer, since, of all the material charged, after a calcination which is supposed to be complete, the reducing C and the oxygen of the ore are the only ones which can change into gas, at least in appreciable quantities, and under the given circumstances.

In this method the mouth of the reducer is kept at a temperature of 500°, and the material coming from the calciner is charged at this same temperature to avoid cooling. The gases blown in from the top into the crucible are made to circulate rapidly in order to convey a greater number of electric calories into the shaft, where the carbon does not give off the full quantity of heat which the metal requires for its reduction. One kg. of oxygen, in fact, combining with CO to give CO_2, gives off 4,200 calories; the same kg., while being separated from iron, absorbs about 4.300 calories.

To study the function of the circulating gases, let us take them at their exit from the top of the furnace, when they are passing into the crucible, and let us follow their course to the interior of the apparatus.

Leaving the furnace-top, they are in a great measure composed of CO, but contain a little CO_2, for the CO_2 produced by reduction does not entirely disappear; however, they contain very little, and so much the less in proportion as their circulation is more rapid. With a circulation carried to an extreme rapidity, they would finally be composed of pure CO.

Let us observe, on the one hand, this large volume of CO, and on the other hand, the small quantity of CO_2 accompanying it.

As soon as it enters the crucible, the CO_2 changes into CO by contact with the solid incandescent carbon, and each kg. of C contained in this CO_2 absorbs, by this transformation to CO, 5,600 calories, while the 1 kg. of solid carbon, combining with it to form CO, gives off only 2,400 calories, the difference, 3,200, represents the calories supplied by electricity for the first reaction, and conveyed to the upper parts of the shaft.

After this immediate transformation of the small quantity of CO_2 the gases rising from the crucible into the shaft are composed solely of pure CO, and passing through the electric zone, they become physically charged with the supplementary heat which they will presently need. This great reducing energy, accompanied by the necessary calories, rapidly transforms the oxides, producing a metallic sponge which will fuse in the lower zones, giving rise to a quantity of carbonic acid, corresponding to the O which was contained in the ore.

Owing to the excess of calories brought by the circulating gases, the temperature, even after reduction, still remains sufficiently high to change into CO a large part of the CO_2 newly formed, and when the volume of gases, including those of circulation blown into the crucible, added to the new ones produced by the reactions in the shaft, reaches the furnace-top, the amount of CO_2 which it contains is in inverse ratio to the degree of the temperature. Let "A" represent this small proportion of CO_2 contained in the gaseous mass when it reaches the top. If we take half the total gases for purposes of circulation, we shall then take the half of "A," which, blown into the crucible, will there be changed into CO, and finally the gases set free escaping from the top, will not contain more than $\frac{A}{2}$.

The proportion of CO_2, *contained in the gases set free, decreases, then, with the velocity of the circulation and with the increase of temperature at the top.*

To sum up, this process aims at the production of *pure* CO at the top of the reducer. The efficiency reaches its maximum when the quantity of CO_2 is reduced to a minimum.

The high or low efficiency of the method is, therefore, determined by the tenor of CO_2.

To regulate this method, and to keep it in proper equilibrium, the operator takes into account:

The temperature of the material leaving the calciner.

The proportion of coke added to the charge.

The velocity of circulation of the gases, which allows of varying the temperature at the top according to the excess of calories reaching it.

It is well to state here that as in this process the gases which collect at the top are composed of almost pure oxide of carbon, the electric reducer constitutes the best gas-producer known in the industrial world.

M. Leverrier admits, in fact, that in presence of atmospheric air, we obtain the following combustion temperatures:

With pure carbon	about	2,716	degrees.
With pure oxide of carbon..............	"	2,967	"
With pure hydrogen	"	2,616	"

What is called water-gas would, therefore, give, by its combustion, a temperature lower than that of the gas produced by the reducer.

Thermic Schedule (First Method of Proceding).

We shall first establish for each part of the apparatus the thermic schedule of calories, that is, the comparison between the calories necessary for the reactions and the calories which we have at our disposal to produce these reactions:—

Note.—(a) In this examination, we shall admit the following data, the greater number of which are taken from Mr. Gruner's work on metallurgy:—

1 kg. of liquid pig-iron contains.....	300	cals.
1 kg. of liquid slag contains.........	500	"
1 kg. of pig-iron requires for reducing the corresponding oxides (the figure is rather high, we believe).	1,984	"
1 kg. of C changing into CO gives off.	2,400	"
1 kg. of CO changing into CO_2 gives off.........................	2,400	"
1 kg. of C passing from CO to CO_2 gives off....................	5,600	"
1 kg. of oxygen passing from CO to CO_2 gives off.................	4,200	"
1 kg. of oxygen in separating from FeO absorbs..................	4,312	"
1 kg. of carbonate requires for separation of CO_2..................	373.50	"

The specific heat of	coke is....	0.24	cals.
" "	air " ...	0.227	"
" "	CO " ...	0.24	"
" "	CO_2 " ...	0.21	"
" "	slag " ...	0.21	"
" "	iron " ...	0.12	"

(b) Moreover, it must be remembered that:

The gases arising from the calciner escape into the atmosphere with a temperature of 100°.

The solid substances produced by calcination fall into the shaft of the reducer at a temperature of 500°.

The gases which escape from the shaft of the reducer are at 500°.

The melted substances reach the crucible of the reducer at a temperature of 1,500°.

The steel produced in the regulator comes out of it at a temperature of 1,800° (acknowledged to be rather low.)

All the following estimates apply to one ton of metal, and the apparatus is supposed to produce one ton per hour:

1. Calciner.

(a.) *Calories required in the calciner* (and in the coke heater, (17) Fig. 3 and 4.)

	Calories.
To vaporize at 100° the 126 Kgs. of water contained in the charge: 126x606	76,536
To separate from their combination 250 kgs. of carbonic acid (250 kgs. of CO_2 corresponding to 568 kgs. of carbonate): 568x373.50	212,148
To heat these 250 kgs. of CO_2 to the temperature at which the gases are allowed to escape: 250x0.21x100...	5,250
To heat to 100° the 705 kgs. of air necessary for the combustion of 283 kgs. of CO, either for the purpose of calcination or for heating the coke in furnace (17): 705x0.227x100	16,026
To heat to 500° the 1947 kgs. of solid substances discharged into the reducer, (their temperature is brought to 1000° for calcination; but they are then cooled and go out only at a temperature of 500°): 1947x0.21x500	204,120
To heat to 500° the 360 kgs. of coke: 360x0.24x500	43,200
For radiation	150,000
Total calories required in the calciner	707,100

(*b*) *Production of calories required in the calciner:*

One kg. of CO taken at 500°, changed into CO_2 at the top of the reducer, then allowed to escape at a temperature of 100°, gives off:

	Calories.
By its combustion	2,400
By the lowering of its temperature: 1 x 0.24 x 400	96
Total	2,496

The calciner will require 283 kgs. of CO, which yield:

$$\left.\begin{array}{l} 283 \times 2400 = 679{,}200 \\ 283 \times 96 = 27{,}900 \end{array}\right\} \ldots\ldots\ldots \quad 707{,}100$$

The total CO produced in the reducer being 758 kgs., the calciner alone uses up 283 of these, say about 37%.

2nd. Reducer.

(a). *Calories required in the reducer:*

	Calories .
For reduction proper, Gruner allows (Metallurgy, Vol. 2, p. 339) that the reduction corresponding to one kg. of pig-iron absorbs 1984 calories: 1000 x 1984	1,984,000

For the fusion of 1000 kgs. of pig-iron at 1500°, Gruner allows that the liquid pig-iron contains about 300 cals. per kg. The necessary calories are then :

1000 x 300

less those already contained in the metal at the top, i.e.; — Calories.

(1000 x 300) – (1000 x 0.12 x 500) 240,000

For the fusion of the 570 kgs. of slag at 1500° :

One kg. of slag contains about 500 calories, according to Gruner: but it is also necessary to here deduct the calories already contained at the top, i.e. :

(570 x 500) – (570 x 0.21 x 500) 225,150

The substances making up the gases at the throat escape from the reducer at 500°, the temperature being the same as when they enter it, and we do not require to take into account their momentary variations of temperature while they are in the interior of this reducer.

For radiation 150,000

Total calories required in the reducer 2,599,150

b. *Production of calories required in the reducer:*

The 325 kgs. of carbon are converted into CO, giving : — Calories.

325 x 2400 780,000

The difference is to be supplied by electricity, i.e. :

2,599,150 – 780,000 1,819,150

Total 2,599,150

3rd. Regulator.

(a) *Calories required in the regulator:*

To raise the crude metal from 1500° to 1800° : * — Calories.

1000 x 0.12 x 300° 36,000

To make and melt about 300 kgs. of slag :

300 x 500 150,000

For radiation 150,000

To compensate for the different reactions which are produced slowly and of which the calorific influence cannot well be defined 200,000

Total calories required in the regulator 536,000

(b) *Production of calories required in the regulator:* — Calories.

Leaving out of account the heat which may be produced by internal reactions, the 536,000 calories necessary for refining are to be derived from external energies which may be either the CO from the furnace-top, or electricity; for simplicity we shall for the present admit electricity alone ; it should then supply 536,000

---

* The temperature 1800° allowed here for liquid steel is too low ; it would have been better to have allowed 2000°.

General Schedule (First Method of Proceeding).

And hence the general schedule of calories is established as follows, for the first method of proceeding, admitting the regulator to be heated by electricity:—

	Calories required for one ton of melted metal.	Calories Produced		
		by Electricity	by Pure Carbon (325 Kgs.)	by CO (283 Kgs.)
Calciner.....	707,100			707,100 of which 679,200= combustion 27,900= cooling.
Reducer	2,599,150	1,819,150	780,000	"
Regulator ...	536,000	536,000		"
Totals	3,842,250	2,355,150	780,000	707,100
			3,842,250	

There still remain available:

758 − 283 = 475 kgs. of CO, which can supply:
475 x 2400 = 1,140,800 calories.

We should further note that the 325 kgs. of pure C were capable of producing by direct combustion:

325 x 8,000	2,600,000
Thus far, in our apparatus, they have yielded:	
In passing to the state of CO........	780,000
By the combustion of 283 kgs. of CO	679,200
There still remain to be utilized, (in the form of pure oxide of carbon).......	1,140,800
Total...............	2,600,000

We then again find that of the 2,600,000 calories which these 325 kgs. of C can give, but a part only is used in the electric furnace, because of the high temperature at the top and the circulation of the gases which bring the C to the state of CO, maintaining a very vigorous reducing action, and borrowing from electricity the calories which are lacking as a consequence of this incomplete combustion of the C.

The circulation adds the heat-producing energy of electricity to the reducing energy of CO, greatly assisting the accomplishment of the object we have in view, viz.: the reduction of the ore; and that without waste of the carbon, being as sparing as possible of this raw material, which we suppose to be costly in the regions where we wish to apply electro-metallurgy.

Electric Energy necessary for one ton of Steel (First Method of Proceeding).

Starting from the thermic schedule, such as we have just determined it, it is interesting to compute in horse-power the electric force to be brought into play for the production of one ton of steel per hour:

1st.—The calciner operates without electric current.

2nd.—The reducer requires 1,819,150 electric calories per ton produced, and if we aim at producing one ton per hour there are required per second:

$$\frac{1,819,150}{3600} = 505 \text{ calories}$$

or, in theoretical H. P.:

$$\frac{505 \text{ c.} \times 425 \text{ kg/m}}{75} = 2860 \text{ H.P.}$$

3rd.—In the refining apparatus electricity should supply 536,000 calories, and having in view the production of one ton per hour, there are required per second:

$$\frac{536,000}{3600} = 150 \text{ calories (about)}$$

or, in theoretical H. P.:

$$\frac{150 \text{ c.} \times 425 \text{ kg/m}}{75} = 850 \text{ H. P.}$$

Say, about 1,000 H.P., since to bring the metal to the desired state involves loss of time which corresponds to loss of heat.

Net Cost Compared (First Method of Proceeding).

In order to determine accurately the economy of the process, we must again determine the value of the quantity of CO which we have at the throat of the reducer:

	kgs.
The total CO produced was...........................	758
Of this the calciner consumed........................	283
And there remains available........................	475

These 475 kgs. of comparatively pure CO give us a combustible volatile matter which can produce in the air a temperature of combustion higher than any other industrial gas, and their very easy application (either for heating or motive power) raises their value much above the same weight of ordinary combustible solid matter.

Let us allow for them the price of 0.025 frs. per kg.

Say: 475 x 0.025 = 11.85 frs.

In the economic comparison between the new process and those actually used in the making of steel, we shall take (as in our first part relating to the triple furnace) coke at 25 francs per ton, and the 1,000 electric calories at 0.01 fr., the price generally allowed in the region of the French Alps.

In the new apparatus we produce one ton of steel with:

	Frs.
360 kgs. of coke, at 25 francs per ton	9.00
1,819,150 electric calories in the reducer, at 0.01 fr. per thousand............	18.19
536,000 electric calories in the regulator...	5.36
Total..................frs.	32.55

From these 32.55 fr., we must deduct the value of the 475 kgs. of CO, which may be utilized and are estimated at 11.85 fr.:

32.55 — 11.85 = 20.70 frs.

These 20.70 frs. replace the following items of the ordinary process of steel making:

1st.—The coke used in the ordinary blast-furnace, say, 1,000 kgs., and all the machinery (boilers, engines, hot-blast appliances) necessary for its combustion.

2nd.—The coal used in the Siemens-Martin furnaces, say about 500 kgs., also at 25 francs per ton.

	Frs.
1,000 kgs. coke at 25 francs per ton	25.00
Machinery and appliances of the blast furnace	5.00
Coal, 500 kgs. at 25 francs per ton......	12.50
Total..................	42.50

Difference in favor of electro-metallurgy:

42.50 frs. — 20.70 frs. = 21.80 frs. per ton of steel.

A very encouraging result.

We shall proceed to the rapid study of the second method, mentioned above on page 148.

3rd: Second Method of Proceeding.

Nature of the Gases (Second Method of Proceeding.)

$$\frac{CO_2}{CO} = 1.25$$

In the second method, the object is the transformation of the maximum of carbon into CO_2, endeavoring to utilize, to the greatest possible extent, the calories which it can produce in the interior of the apparatus, and not outside in the form of combustible gases.

Is it possible to change all the reducing carbon into CO_2, and if we cannot obtain this transformation completely, to what extent can it be done?

Mr. Gruner allows that in the old blast furnace the ratio in weight $\frac{CO_2}{CO}$ does not exceed 0.80; beyond this the mixture, encompassed by a mass of inert nitrogen, has no longer any reducing action upon the ore.

The new process, being free from nitrogen, brings the oxide of carbon alone to bear on the oxide of iron, and the reducing action is therefore more effective and more thorough since it is impeded only by the CO_2 formed; it cannot, however, succeed to completely eliminate the CO, for CO is again formed, partially by the action of the C, still at red heat, on the CO_2 produced by the reaction, and this even at a temperature comparatively low; *hence the necessity of maintaining a low temperature at the top.*

We need not hope then to obtain pure CO_2; but the ratio $\frac{CO_2}{CO}$ will be much higher than in the old blast furnaces, and it seems justifiable to allow $\frac{CO_2}{CO} = 1.25$.

The coefficient establishes the second method of working and determines the weight of pure C necessary for reduction, inasmuch as the total weight of oxygen contained in CO and CO_2 should be that of the oxygen contained in the oxides, e.g., equals 433 kgs.

The estimate gives per ton of steel:

$CO_2 = 365$ Kgs. $C = 100$ Kgs. The ratio $\frac{365}{292} = 1.25$
$CO = 292$ " $C = 125$ "
C total = 225 Kgs.; coke 247 Kgs.
Total oxygen = 433 Kgs.

The weight of the gases escaping free at the mouth of the reducer, per ton of pig iron, is about 657 kgs.; the calorific power (or calories given off by 1 kg. of the mixture) is only 1,066, at a somewhat low combustion temperature.

In this process the furnace-top should be kept at a temperature of about 200°, and this is also the temperature of the calcined material when it reaches the reducer.

The gases blown from the top into the crucible circulate less rapidly, and are consequently less in quantity, having no longer to convey physically such a large amount of electric calories into the shaft, where the carbon will supply additional heat by its transformation into CO_2. As in the first method, the circulation in the electric zone of the crucible transforms the gases completely into CO, and the reducing energy remains as intense in the lower part of the shaft; on the other hand, it is less active in the upper part, which should be increased in height in order to allow a longer time for this slower action to take place.

Taking into account the modifications indicated, the equilibrium of this method is regulated in the same way as that of the first.

Thermic Schedule (Second Method of Proceeding).

1st. Calciner.

(a) *Calories required in the calciner:*

	Calories.
Evaporation of water	76,356
Separation of the 250 kgs. of CO_2	212,148
Heating of the 250 kgs. of CO_2 to 100°	5,250
Heating to 100° the 568 kgs. of air required for the combustion of the 228 kgs. of CO necessary either for calcination or for heating the coke in furnace (17): 568 x 0.227 x 100	12,890
Heating to 200° the 1947 kgs. of solid material sent to the reducer; their temperature is brought to 1000° for calcination, but they are subsequently cooled and they are discharged at only 200°: 1947 x 0.21 x 200	81,760
Heating to 200° the 247 kgs. of coke: 247 x 0.24 x 200	11,856
Radiation	150,000
Total calories required in the calciner	550,260

(b) *Production of calories required in the calciner:*

1 kg. of CO taken at 200° at the top of the reducer, changed into CO_2 then allowed to escape at 100°, gives off:

	Calories
By its own combustion	2,400
By its cooling from 200° to 100°: 1 x 0.24 x 100	24
By the cooling of the 0.80 kgs. of CO_2 which accompanies it: 0.80 x 0.21 x 100	16
Total	2,440

Therefore, there are required for the calciner:

$$\frac{550260}{2440}=228 \text{ kgs. of CO (approximately.)}$$

These 228 kgs. of CO correspond to 513 kgs. of gas escaping from the furnace-top; the total of these gases being 657, there remain still to be disposed of 144 kgs., capable of developing 144 x 1,066 = 153,504 calories.

2nd. Reducer.

(a) *Calories required in the reducer:*

	Calories.
Reduction	1,984,000
Fusion of 1000 kgs. of pig-iron: (1000 x 300) – (1000 x 0.12 x 200)	276,000
Fusion of 560 kgs. of slag: (560 x 500) – (560 x 0.21 x 200)	256,000
The substances composing the gases at the furnace-top escape at 200°, the same temperature as when introduced into the reducer, and we need take no account of them.	
Radiation	150,000
Total calories required in the reducer	2,666,500

(b) *Production of calories required in the reducer:*

Of the 225 kgs. of C charged, 125 kgs. are changed into CO, giving:

	Calories.
125 x 2,400	300,000
100 kgs. are changed into CO_2 giving: 100 x 8000	800,000
Total calories obtained from C	1,100.000
The difference is to be supplied by electricity, viz: 2,666,500–1,100,000	1,566,500

3rd. Regulator.

	Calories.
a. *Calories required*	536,000
b. *Calories to be supplied by electricity*	536,000

General Schedule (Second Method of Proceeding).

And hence the general schedule of calories is established in the following way for the second method of proceeding:

	Calories required for one ton of melted metal	CALORIES PRODUCED		
		By Electricity	By pure carbon (225 Kgs.)	By C O (228 Kgs.)
Calciner	550,260			550,260
Reducer	2,666,500	1,566,500	1,100,000	
Regulator	536,000	536,000		
Totals	3,752,760	2,102,500	1,100,000	550,260
			3,752,760	

There still remain available 144 kgs. of gas at the top of the reducer, capable of producing 153,500 calories.

Electric Energy necessary for one ton of Steel (Second Method of Proceeding).

1st.—The calciner operates without supplementary heat from electric current.

2nd.—The reducer requires 1,566,500 electric calories, corresponding to:—

$$\frac{1,566,500}{3,600} \times \frac{425}{75} = 2,465 \text{ H.P.}$$

instead of 2,860 H.P. necessary in the first method of proceeding.

3rd.—The regulator requires the same number as in first method, 850 H.P.

Net Cost Compared (Second Method of Proceeding).

The 144 kgs. of combustible gases which may still be utilized after deducting what is necessary for the calciner have a value per kg. much lower than the pure CO given by the first method, and for which we have allowed the price of frs. 0.025 per kg.; it will be correct to allow now fr. 0.01 per kg., viz., 1.44 frs. for the 144 kgs. which remain available.

By the second method of proceeding, we produce one ton of steel with:—

	Frs.
247 kgs. coke at 25 frs. per 1000 kgs.	6.17
1,566,500 electric calories in the reducer, at 0.01 fr. per thousand	15.66
536,000 electric calories in the reducer, at 0.01 fr.	5.36
Total	27.19
Deducting for the gases remaining to be utilized	1.44
Total remaining	25.75

At the cost of 25.75 francs, we replace the elements which, in the case of the old blast furnace, would cost frs. 42.50

The difference in favour of electro-metallurgy is, then, for the second method of proceeding:—

42.50 frs. − 25.75 frs. = 16.75 frs.

This result, though not so good as that of the first method, is still gratifying.

IV. Objections.

1st.—In the first method of proceeding, it may be thought exaggerated to admit the same value for a kg. of CO as for a kg. of coal. But the value is measured by the possibility of utilizing it.

In many cases it is found advantageous to change coal into combustible gases, which may be more conveniently used, allowing us to obtain higher temperatures; those usually obtained in the ordinary gas-producers are, however, diluted with a mass of nitrogen which hinders their combustion and lowers the final temperature. But the CO obtained by the electric furnace, being almost pure, without nitrogen, appears to us to have a value much greater than these ordinary gases.

If we even compare the CO to water-gas or lighting gas, it gives a higher combustion temperature, which gives it a superiority for the heating of a Siemens-Martin, for example, or for the heating of the regulator in the new process of electro-metallurgy. Now, in the Loire, a coal-producing country, lighting gas, produced from distillation of coal, costs 0.20 frs. per cubic meter when it is used for heating purposes, say, nearly 0.40 frs. per kg., since its density is low; there is then no exaggeration, if in our estimates we reckon 1 kg. of CO at 0.025 frs., say 16 times cheaper.

It may be objected also that 758 kgs. of CO at 0.025 frs makes a value of 18.80 frs. whereas the 360 kgs. of coke at 25 frs., which produce them, are estimated at only 9 frs.

But we have just shown the reasons for estimating 1 kg. of CO at the same value as 1 kg. of coal or coke; and if one should wonder at the increase in value on the part of 1 kg. of C (pure carbon) while going through the reducer from bottom to top, it must be remembered that this conversion of solid C into gaseous CO gives value to C, because of the fact that it has become gaseous. This transformation in any kind of apparatus whatever would be costly, especially to obtain almost pure CO, and in the present case this conversion is made by the help of supplementary electric calories; this step, from our descriptions, does not appear to entail great additional cost, but in reality it does so.

For all these reasons we believe it justifiable to retain the price of the CO at 0.025 fr. per kg.

2nd.—Fault might be found with our estimate in the thermic schedule because of our not taking account of the calories absorbed by the mechanical power which induce the circulation of the gases in the reducer.

The fact is, we have taken no account of this expense, which will decrease by its amount the result at which we arrived in our estimate of the general economy, but this loss is small, scarcely worth noting in a large hydraulic plant.

3rd.—It may be asked why, in the first method of proceeding, we have not used for the heating of the regulator the gas CO which remains available, and the combustion temperature of which is so high.

This has been done purposely in order to make evident the maximum energy which is required per ton of steel under the most disadvantageous circumstances; and also for the purpose of shortening somewhat the first part of this paper, already too long, omitting, if desired, the present observations.

But, in fact, it is interesting to study briefly the application of CO to the heating of the regulator, which will lead to a saving of electric power.

The CO may be applied to the refining furnace, either of the Siemens-Martin type with regenerator, or of the type of our regulator with gas blow-pipe, the air being forced at high pressure and blown directly upon the bath. The combustion temperature of the CO is so high that in the regulator (where the metal arrives in a liquid state at 1,500°, and the CO at nearly 500°), the heating is possible by blow-pipes alone without regenerator. This mode of heating is possible even with ordinary lighting gas, the combustion temperature of which is lower.

In the case of the regulator with blow-pipe, the consumption of CO will be about 255 kgs., producing (at the initial temperature on leaving the top) a greater heat than the 536,000 necessary calories; and there will still remain 220 kgs. of CO available for the heating of the ingots, or for any other purpose.

By the use of the CO in the regulator, we diminish by 536,000 the calories to be derived from electricity, and the economic comparison of the process may in this case be established in the following way:—

We now produce one ton of steel with:

	Frs.
360 kgs. coke, at 25 frs. per ton...........	9.00
1,819,150 electric calories at 0.01 frs. per thousand in the reducer	18.19
Total....................	27.19

From these 27.19 frs. we must deduct the value of 220 kgs. of CO remaining to be utilized and valued:

	Frs.
220 kgs. x 0.025	5.50
Say 27.19 – 5.50 remaining	21.69
These 21.69 frs. replace as before:	
1000 kgs. of coke, at 25 frs.	25.00
Machinery	5.00
Coal, 500 kgs. at 25 frs.	12.50
Total	42.50

Difference in favor of electro-metallurgy equals:

42.50 frs. – 21.69 frs. = 20.81 frs. per ton.

The economy is somewhat less obvious than in the first method of proceeding described above, but the arrangement allows us to demand less from electricity, and to reduce the total force necessary to 2,860 horsepower for an output of one ton per hour.

Fig.1

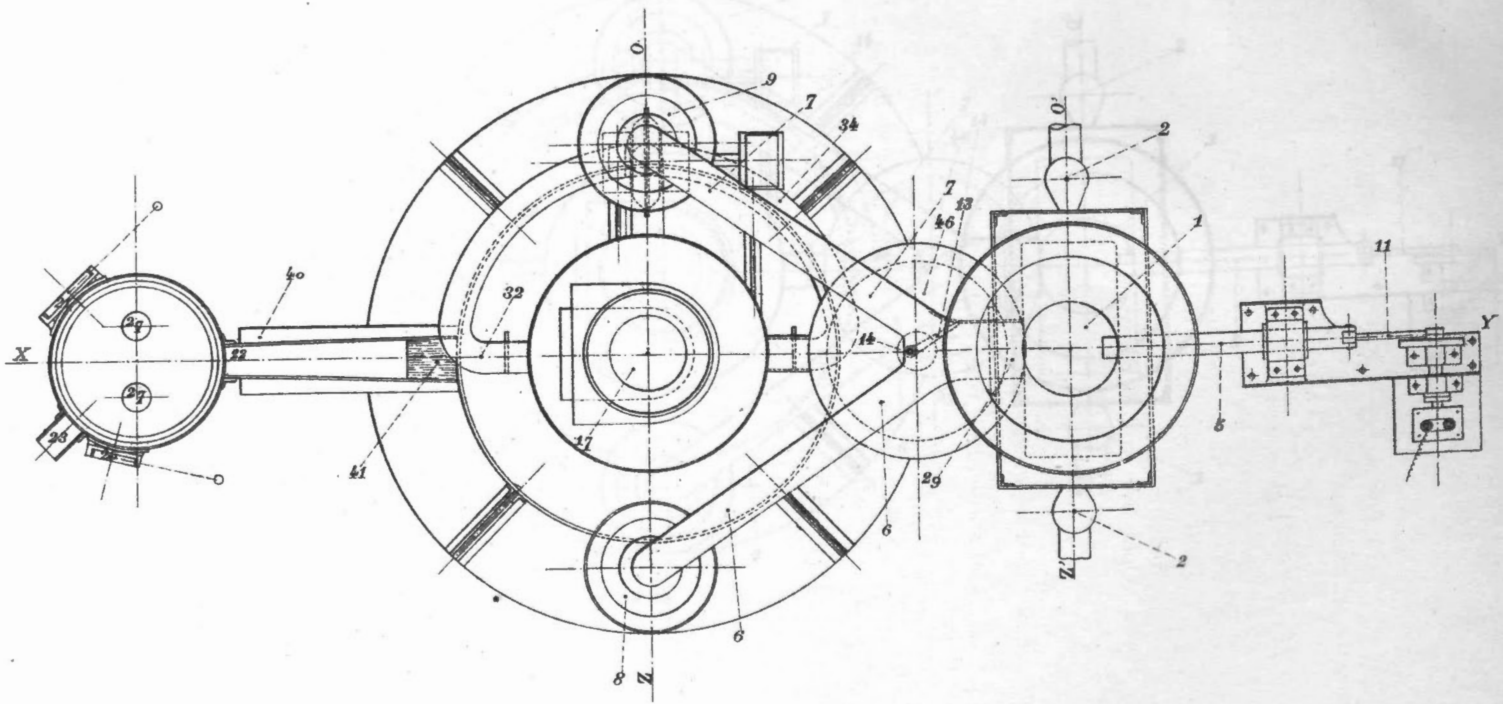

Scale 12 mm.= one meter

Showing the arrangement of one reducer supplying two regulators

Fig. 1a

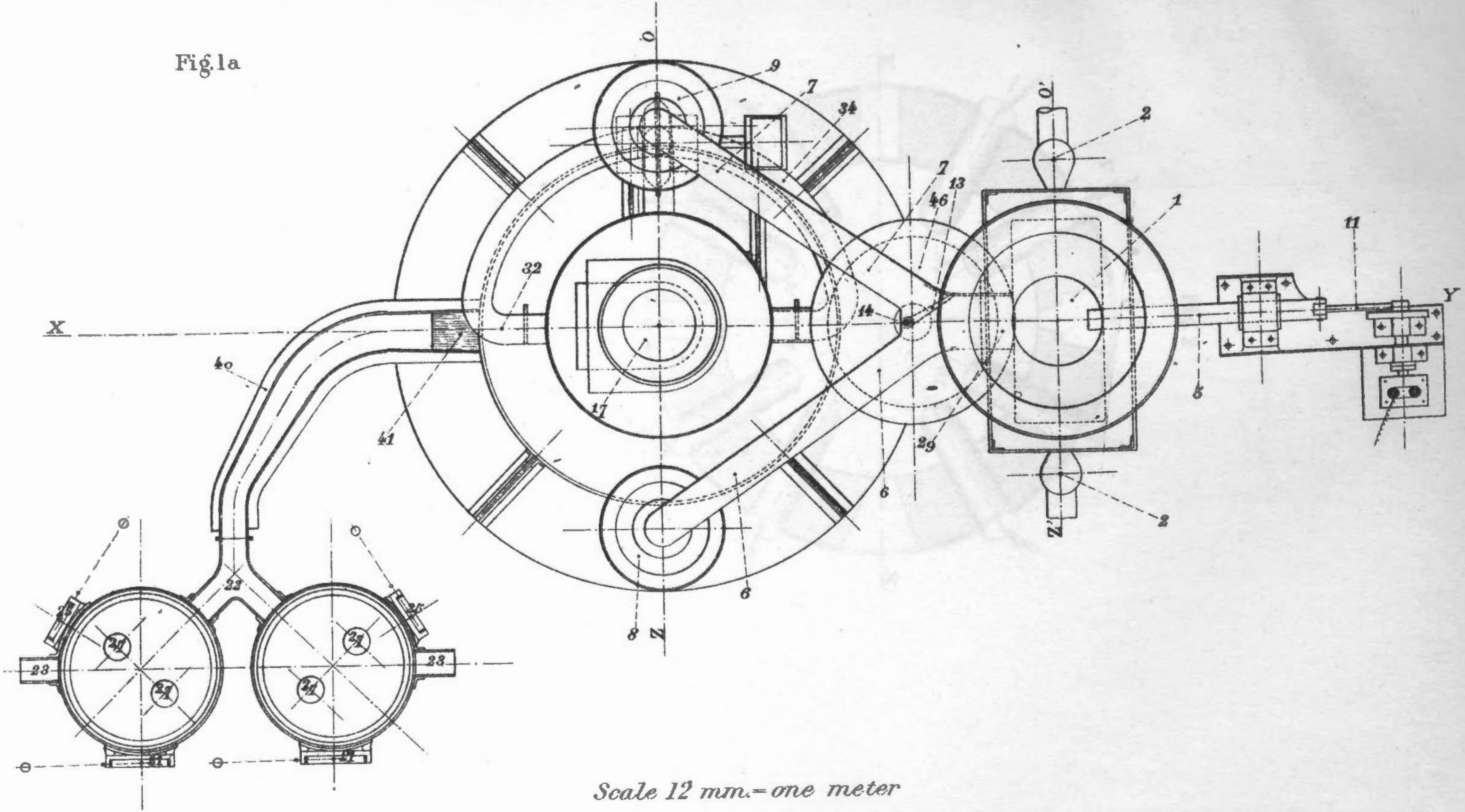

Scale 12 mm.= one meter

Fig. 2

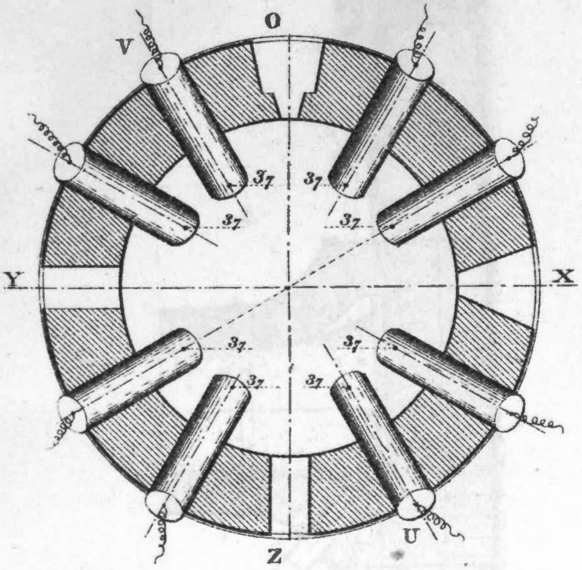

Scale 17 mm.= one meter

Fig. 3

Scale 11 mm.= one meter

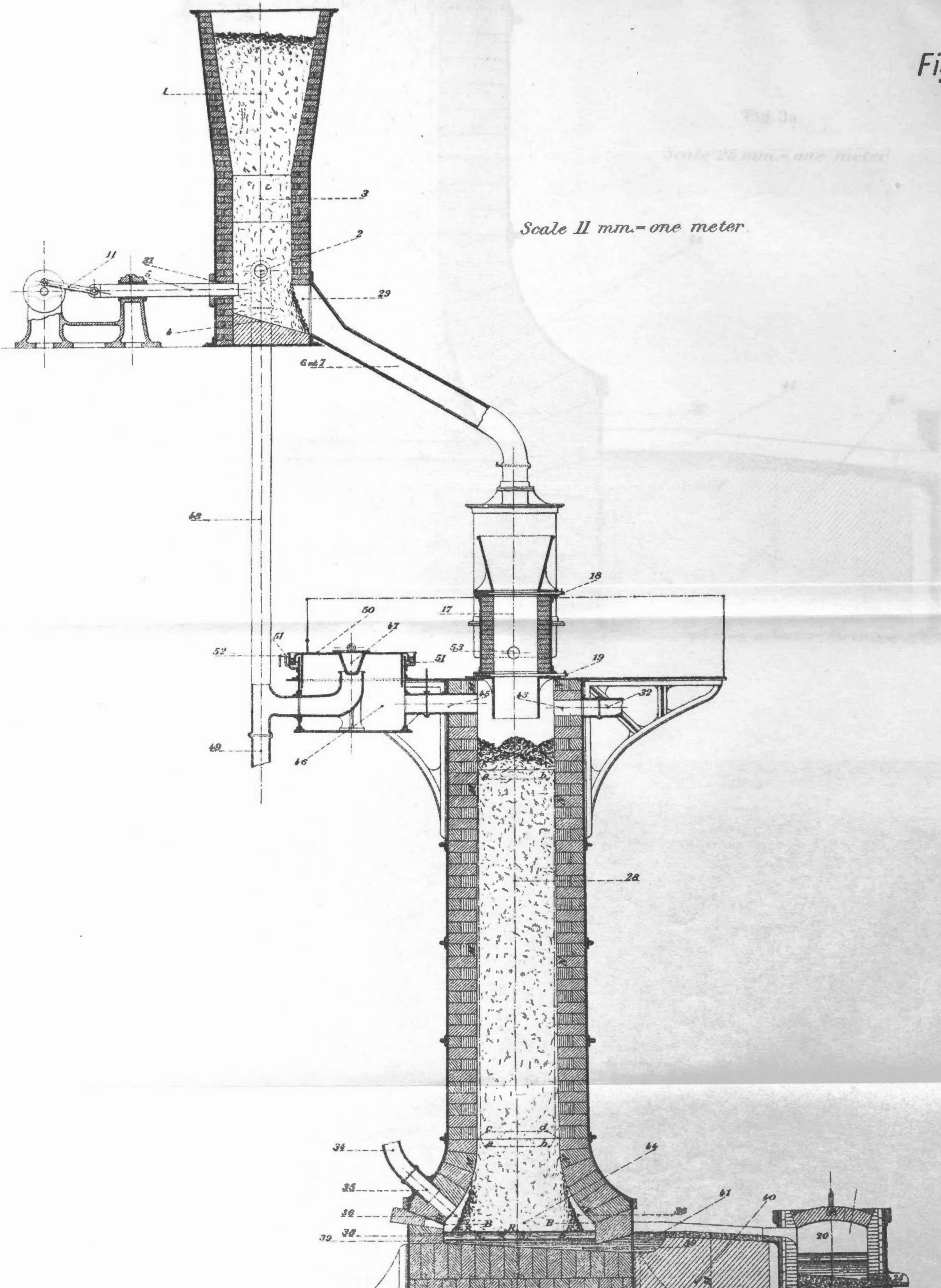

Fig. 3a

Scale 25 mm.– one meter

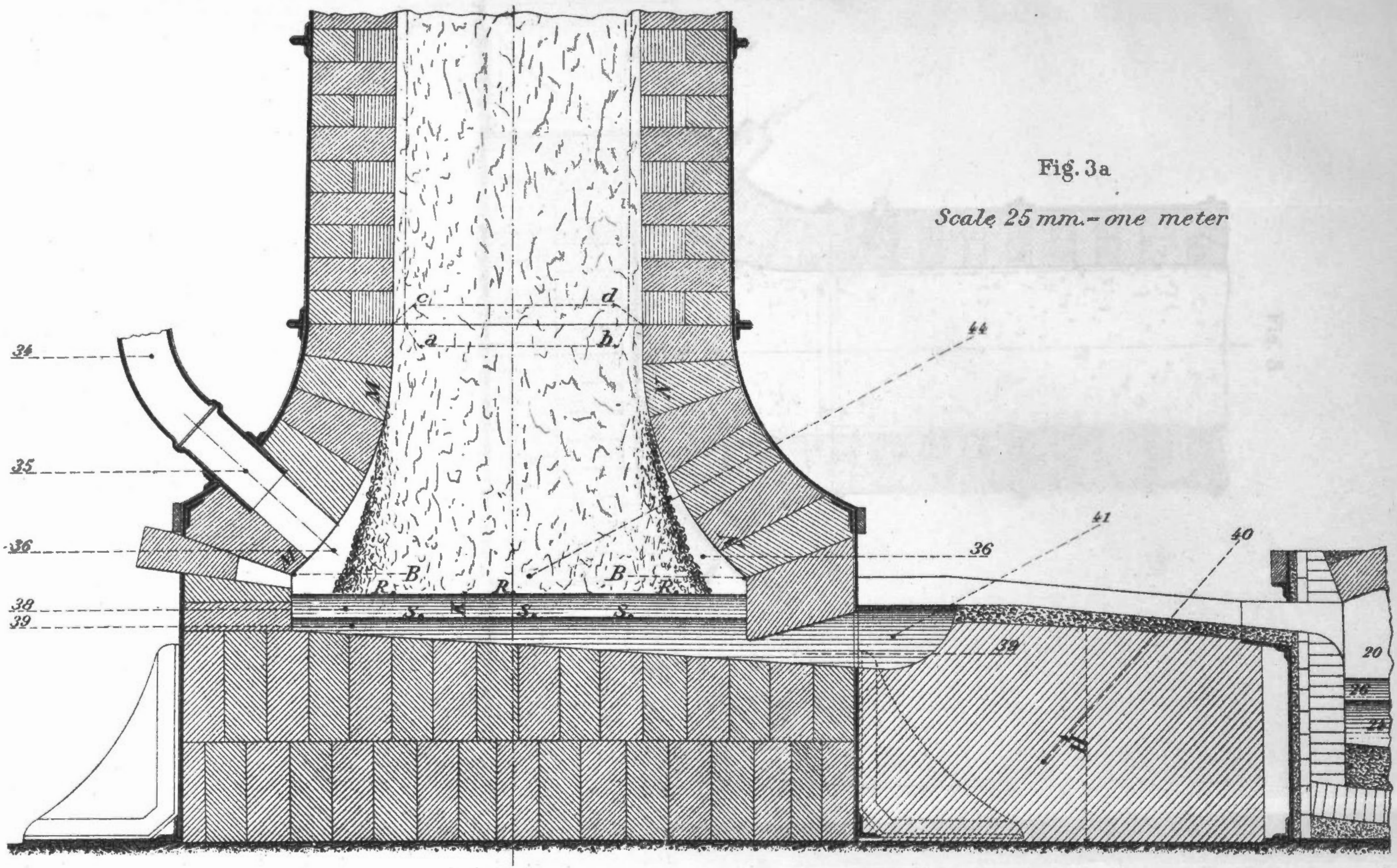

Fig. 4

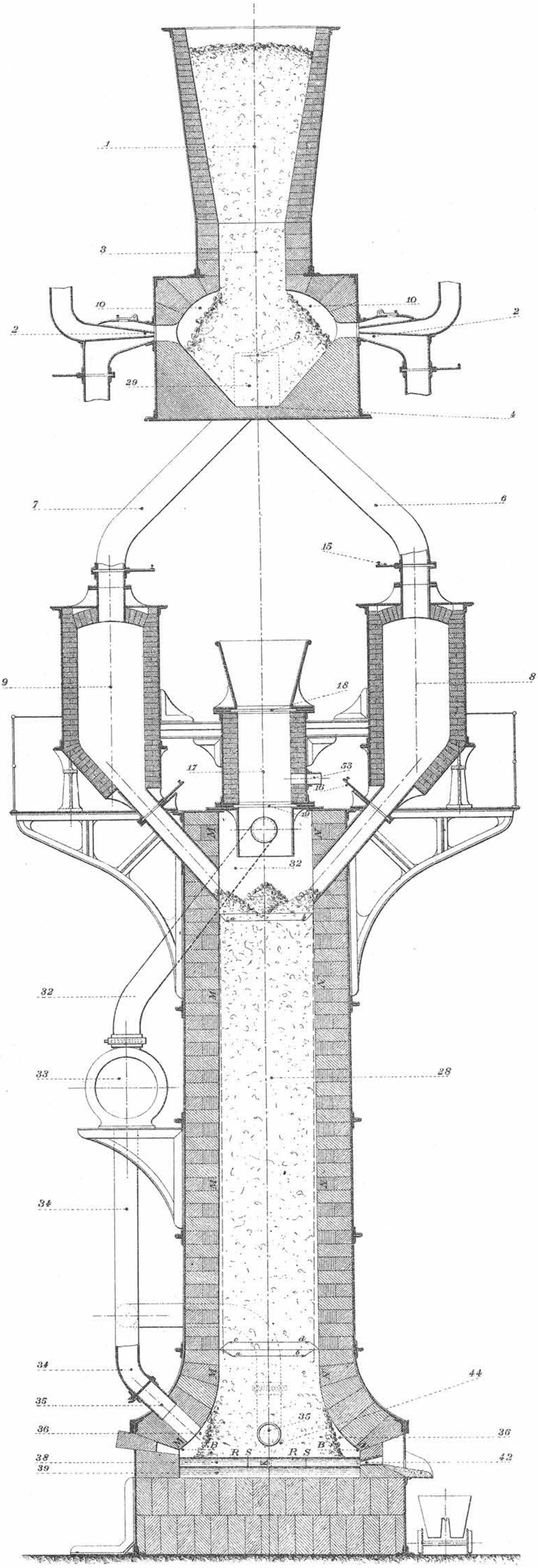

Scale 17 mm.= one meter

Fig. 5

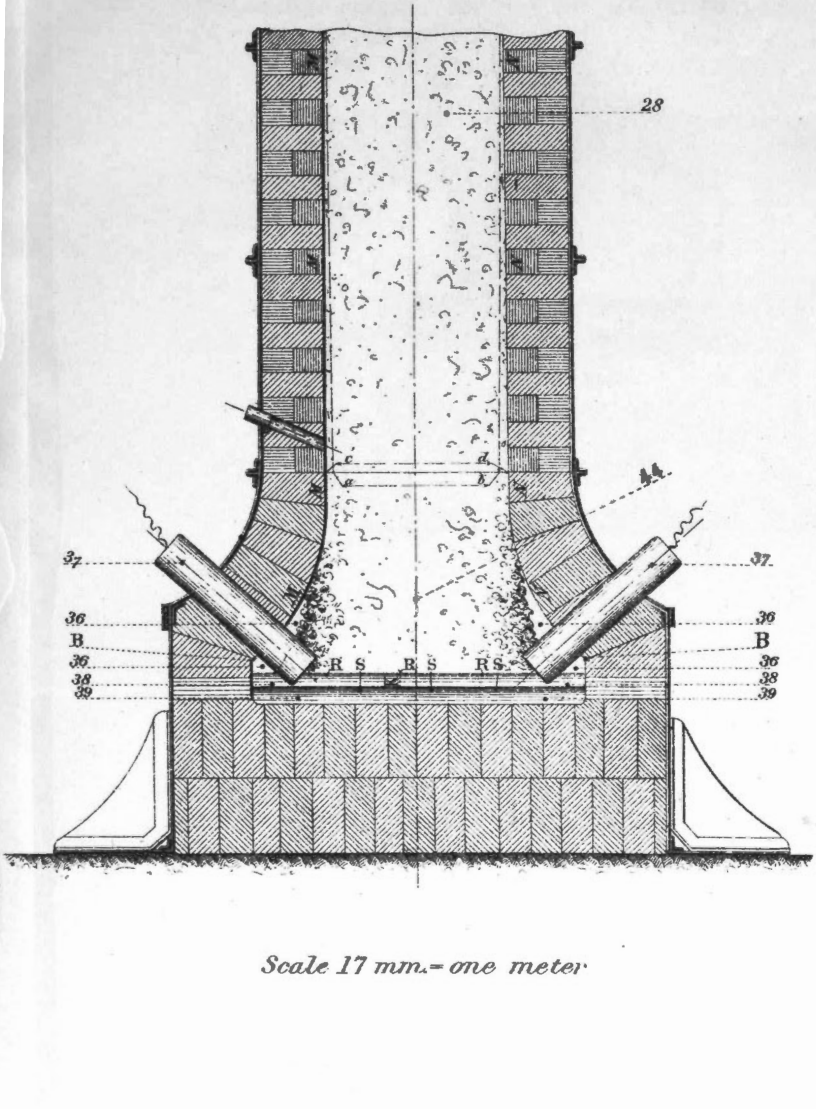

Scale 17 mm.= one meter

REGULATOR OR ELECTRIC MARTIN FURNACE

Scale 33 mm. = one meter

Fig. 6.

Section through the charging opening and the tapping hole for the metal

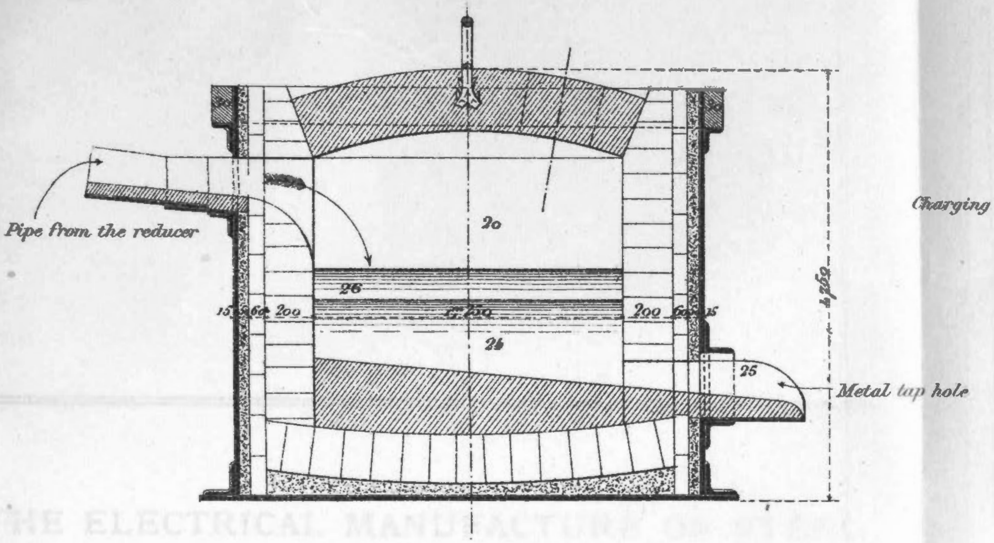

Fig. 7

Section through the charging doors and the slag discharge

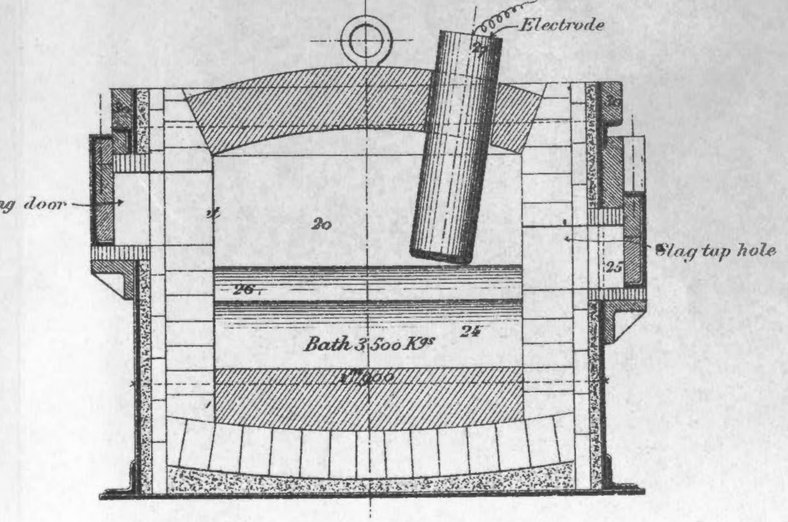

Fig. 8

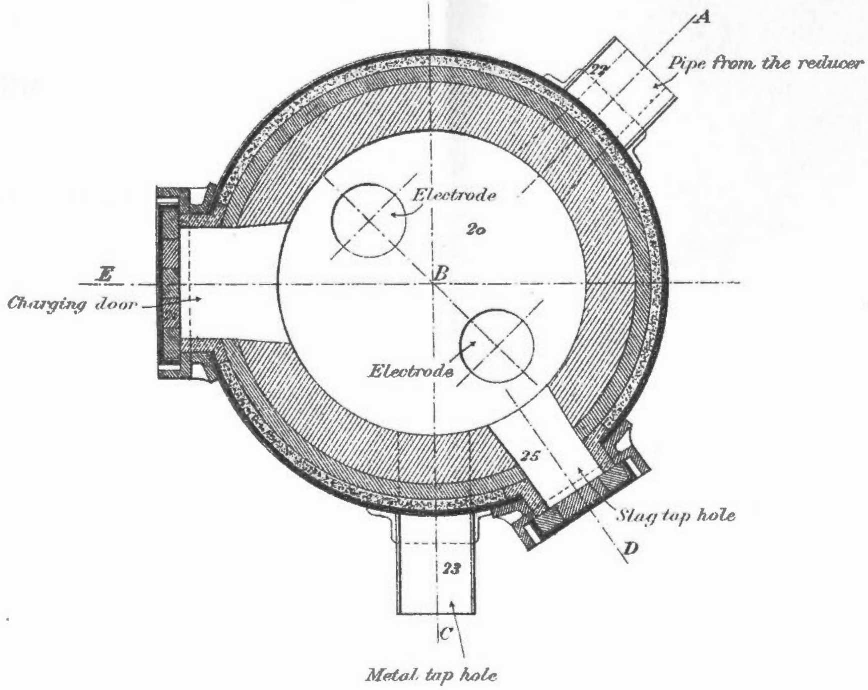

THE ELECTRICAL MANUFACTURE OF STEEL.

BY

GUSTAVE GIN.

THE ELECTRICAL MANUFACTURE CF STEEL.*

PROCESS OF GUSTAVE GIN.

The changes in the physical states, and the reciprocal reactions of substances involved in the industrial production of iron and derived metals, require the consumption of a certain amount of energy, hitherto obtained by the combustion of carbon. In the present process an attempt is made to replace this by electric energy.

The technical solution of this problem may now be considered an accomplished fact, but it is advisable to make certain reservations as regards the economic results. It must not be forgotten, in fact, that while electricity is the most tractable of the forms of energy, it is, generally speaking, also the most costly. It should not, therefore, be employed except knowingly (with a thorough understanding of the conditions) and its use should be limited to those applications where its superiority is clearly evident. By carefully examining all the data of the problem, it appears certain that the application of electric energy to the "direct extraction" of iron from ores cannot be advantageous, except under certain exceptional conditions.

Besides, it must be recognized that the modern blast furnace, to the perfecting of which so many metallurgists have concentrated their efforts, is a marvellous metallurgical instrument, in which the utilization of heat energy approaches so closely to perfection that it is seeking Utopia to attempt to substitute for it the electric furnace. Such a substitution is, furthermore, inconceivable, except in certain localities particularly favored as regards electric energy, and minerals.

But it becomes a different matter when electric energy is used for the conversion of pig iron into steel. In this case the electric furnace clearly has the advantage of the Martin furnace, always providing that the electric energy may be obtained at an acceptable price either by the employment of hydraulic power for generating purposes, or by the use of the energy available in the waste gases from blast furnaces.

As soon as, by the latter means, the following combination has become an accomplished fact, viz., the blast furnace for cast iron; the Bessemer converter for the common steels; and the electric refinery for higher grade steels, the industrial metallurgy of iron will have realized an almost perfect utilization of the heat energy of coal.

---

* From the French.

GIN PROCESS.

From the data submitted by Dr. H. Goldschmidt, of Essen, at the recent Fifth Congress of Applied Chemistry, at Berlin, it appears that the first electric furnace for the manufacture of steel was proposed by myself in 1897 (French Patent No. 263,783, February 6th, 1897). Since that time researches upon this interesting question have been continued, and many new types of furnaces for steel production have been studied. The latest type depends upon the utilization of the Joule effect, without the use of carbon electrodes.

In the various types of apparatus devised up to the present time to produce electro-thermic reactions in molten pig iron, great difficulties have been experienced in utilizing the energy of the electric current in a bath, the resistivity of which scarcely exceeds 200 microhms per cubic centimeter; generally, one is forced to produce the Joule effect in a layer of slag floating on the metallic bath using the notably higher resistivity of this slag.

Moreover, the use of carbon electrodes is an obstacle to decarburization, because reduction of the constituents of the slag is more readily effected by the carbon of the electrodes than by the combined or dissolved carbon in the bath.

Finally, furnaces have been devised where the current which passes through the bath is generated by induction and without the use of any electrodes. But it should be noted that such an apparatus is costly, and involves a considerable magnetic leakage, incompatible with an efficient utilization of electric energy.

For the purpose of avoiding these undesirable features, the expedient of the slag bath, and the objectionable use of carbon electrodes, the idea arose of forming the electric furnace as a trough or channel of great length, and small cross-section; filling this trough with molten pig iron, and having at its terminals blocks of steel cooled by an internal current of water.

The passage of the proper amount of current in the conductor of fused metal develops a quantity of heat sufficient to maintain the whole mass in fusion, and to bring it to the most favorable temperature for producing the refining reactions. On the other hand, the large section of the blocks forming the terminals of the circuit prevents a great rise of temperature in them, being aided in this respect by the circulation of cold water.

To give a convenient form to the crucible, the trough in which the metal is held is doubled on itself several times, so that there is formed a sort of huge incandescent lamp, of which the filament consists of a bath of molten iron.

In practice the apparatus would consist of a movable carriage on rails, (see Figures 1, 2, 3 and 4), having a body made of refractory materials. In this movable body is placed the crucible, in the form of a channel or trough, having, in cross-section, vertical walls and a semi-circular bottom (A), and a sinuous course. The ends of the canal connect with the terminals for the current supply (BB), each of these consisting of a block of steel so shaped as to form an open basin in the canal. The terminal blocks carry a vertical downward extension, which serves for the connection (G), with the conductors carrying the current. These terminal blocks are cooled by an interior circulation of water, which is introduced into the cavity (D) by means of the tube (E), connected with a reservoir by means of a strong rubber tube. The water escapes by the orifice (F), which is also connected by rubber hose to the over-flow channel.

When a charge of metal is to be refined, the crucible carriage is placed in a furnace with an arched roof, in order to reduce as much as possible the loss of heat by radiation. The furnace being in place, electric connection is made at (G) and the fused pig iron is introduced by the funnels (H).

The dilution-method (scrap process) may be employed by adding to the iron a calculated proportion of scrap iron, which dissolves in the fused bath. The carbon of the iron diffuses rapidly throughout the mass, and the conversion of the whole into steel is practically effected as soon as the fusion of the added metal has been completed.

It is also easy to employ the method of oxidation, by the addition of some iron oxide (ore process). The oxygen of the iron oxide added to the bath burns the silicon, manganese and carbon. As in a furnace of this type the temperature can be elevated at will, the carbon is eliminated with great rapidity, thus obtaining a more complete dissociation of the iron and carbon in the pig iron.

When the pig iron, or mixture of pig iron and scrap, has become all fused, the iron oxide is added with a shovel; quite a lively ebullition is produced, which decreases gradually. When the progress of decarburization is manifested only by the small blue flames which escape periodically at the surface of the bath, a further quantity of oxide is added. The same phenomena occur, but not so strongly marked this time, and the extent of decarburization is judged of by the feebleness of the blue flames.

At this time the test specimens may be taken and, if necessary, the final additions of spiegel or ferro-manganese may be made, although these latter are not so important in this as in other types of furnaces; this is particularly true with reference to the silicon generally employed to play the role of intermolecular combustible, this being quite unnecessary with electric heating of the metal.

It is interesting to note that in this electric furnace the oxidation of the impurities of the pig iron, and notably that of the carbon, is brought about without the intervention of atmospheric oxygen. Thus, the amount of dissolved oxide is reduced, and, consequently, the quantity of deoxidizing materials to be introduced at the end of the operation is lessened.

It should be remarked that the localization of the heating in the metallic conductor enables one to obtain temperatures which would not be realizable in furnaces of the Martin type, without melting the arches and consequent danger of spoiling the metal exposed on the hearth.

The dephosphorizing and desulphurizing materials may be introduced at practically any moment after the metal is well fused, either before, or during, or after the decarburization. The removal of the slag is effected by means of an iron scraper, which is handled by the workmen through the door of the furnace.

The finished metal is poured from the openings (K), which are placed at the front or end of the furnace opposite the electric connections.

The method of oxidation (ore process) is dwelt upon at some length, and less has been said about the method by dilution, the application of which is more difficult, since it would require considerable alteration of the section of the bath, and on account of the necessity which it would entail of varying the voltage of the electric current between wide limits.

The dilution method only possesses real interest in the case of a plant exceptionally placed with reference to a supply of pig iron, containing but little sulphur or phosphorus. In fact, it should be kept in mind that dilution without simultaneous oxidation would require the use of very pure materials, because the elimination of impurities would be insignificant.

All the advantages of these two methods may be combined, and their respective inconveniences avoided by the use of a "mixed method," involving the use of a certain amount of scrap, and oxidation by the addition of iron oxide. It should be noted, moreover, that even in the Martin furnace the "ore process" is not rigorously followed, but that about one-fifth of the total charge is scrap iron.

The following shows the manner in which it is proposed to operate the Gin furnace in practice:—

The crude metal is treated with some iron ore and lime, so as to oxidize the impurities, while producing a basic slag, which facilitates the elimination of the phosphorus. When the purification is sufficient, the scrap iron is introduced into the very hot bath, the slag is removed when fusion is complete, and the final additions of ferro-manganese are made to reduce the oxide dissolved in the metal.

It is understood, of course, that the use of this mixed process is dependent upon the nature of the possible supply of raw materials, but it is especially adapted for those plants which can obtain, at reasonable prices, scrap iron, rail ends, bars, sheets, &c., suitable for making proper mixtures.

Special Steels.

The Gin furnace will permit of the easy manufacture of special steels by the direct incorporation of the additional elements—manganese, nickel, tungsten, vanadium, molybdenum, &c. Special grades, having a high manganese content, and containing but very little carbon, may be obtained by adding to the bath a suitable proportion of silicon-manganese (which was first prepared by me by the reduction of rhodonite, French Patent No. 326,438), and by oxidizing the silicon by means of manganese dioxide, according to the reaction:

$$\underbrace{mFe + 2nSiMn_2}_{\text{Metallic Bath}} + 3nMnO_2 = \underbrace{mFe + 5nMn}_{\text{Manganese steel}} + \underbrace{2nSiO_3Mn}_{\text{Slag}}$$

It is desirable in this case not to push the temperature of the bath too high, because the manganese would then spontaneously vaporize.

Furnace Materials.

The materials of which the channel forming the crucible is constructed should obviously be sufficiently refractory to withstand the highest temperature of the bath. For this reason lime and magnesia would constitute the best materials, if these bodies were not so easily converted into slag by the silica resulting from the oxidation of the silicon in the bath.

It is true that lime and dolomite play an important part as dephosphorizing and desulphurizing agents, but it is better to employ the calcareous materials mixed with the oxidizing agents. As for silicious linings, they are not sufficiently infusible to be used without rapid deterioration. The best protective coatings are found in rich bauxite, and above all in chromite, which may be agglomerated by ordinary methods.

Example of the Application of the Process by Oxidation.

For an iron containing:

Carbon	3.60	per cent.
Silicon	1.68	"
Manganese	1.10	"
Phosphorus	0.62	"

The proportions of the above impurities have been chosen arbitrarily to facilitate calculation. The composition of a ton of pig iron may, in fact, be represented by the simple formula here given, expressed in kilogram-molecules:

$$16.6\ Fe + 3\ C + 0.6\ Si + 0.2\ Mn + 0.2\ P\ldots.$$

If we suppose that the finished steel contains 0.96 per cent carbon and 0.28 per cent silicon and if we admit, for the simplification of the formulas, that the other impurities are practically eliminated, the "ensemble" of the reactions may be deduced from the equation:

$$\underbrace{x\,(16.6\ Fe + 3\ C + 0.6\ Si + 0.2\ Mn. + 0.2\ P \ldots)}_{\text{Pig Iron}} + \underbrace{yFe_2O_3}_{\text{Ore}} + \underbrace{zCaO}_{\text{Lime}}$$

$$= \underbrace{17.7\ Fe + 0.8\ C + 0.1\ Si}_{\text{one ton of steel}} + \underbrace{(3x - 0.8)CO}_{\text{Carbon monoxide disengaged}}$$

$$\underbrace{+ x\,(0.5\ SiO_2 + 0.2\ MnO + 0.6\ CaO + 0.6\ FeO) + 0.1\ x\,(P_2O_5 4CaO)}_{\text{Slag}}$$

From this it follows that the production of one ton of steel requires:

	kgs.
Pig iron	919
Fe_2O_3	218
CaO	56

The quantities eliminated theoretically amount to 52.0 kgs., while there is a recovery of 134.4 kgs. of iron.

We may admit as practical the following figures for the production of one ton of steel, by the method of oxidation:—

	kgs.
Consumption of pig iron	924
Iron ore (75% Fe_2O_3)	320
Lime	56

Energy Consumed.

The calorific energy derived from the electric current is utilized as follows:—

(a) Heating the metallic bath from 1,300° to 1,750° C.

(b) Heating the reagents to 1,600° C.

(c) Chemical reactions.

(d) Radiation losses.

a. Heating the metallic bath.

We raise the temperature of 924 kgs. of pig iron from 1,300° to 1,750° C. But, between these two temperatures the specific heat of the iron varies between 0.40 and 0.58, which gives 0.48 as mean value. The heat consumed is, therefore:—

$$q_a = 924 \times 0.48 \times 450 = 199{,}600 \text{ calories}$$

b. Heating the reagents.

The average specific heat of Fe_2O_3 and CaO, between 0° and 1,600°, is respectively 0.19 and 0.23, so that the heat consumed in heating the reagents is:

$$q_b = (320 \times 0.19 + 60 \times 0.23)\ 1600 = 119{,}400 \text{ calories.}$$

c. Chemical reactions.

By balancing the respective heats of formation of the various compounds which occur in the two members of the above equation, we have:

$$q_c = 75,000 \text{ calories}$$

The total of the calories expended for the heating of the masses and the chemical reactions is, therefore:

$$199,600 + 119,400 + 75,000 = 394,000 \text{ calories}$$

which corresponds to a consumption of 456,000 watt-hours per ton of steel manufactured.

d. Radiation losses.

Let us suppose the process to be running regularly, the masonry of the furnace structure being heated by previous operations, the iron of the next charge is introduced at a temperature which does not materially exceed that of the interior of the furnace. The calorific radiation of the bath is, therefore, of but minor importance at the beginning, but it increases as an exponential function of the heating of the metal, which is, at first, very rapid, since nearly all the heat generated by the current is used in heating. To reduce these losses, when the temperature of the bath reaches 1,500° C., it is covered with some of the ore and lime.

At first these reagents are heated as much by radiation from the furnace roof as by contact with the bath, the radiation from which is momentarily almost stopped. When the reagents have been converted into slag and fused, radiation is resumed from the surface of the liquid slag; later on, when the purifying reactions have terminated, the slag is cleaned off, and the surface of the bath being exposed, radiation becomes intense, the temperature finally tending to reach a point where there is a balance between the generated and dissipated heat.

From a few experiments which I have made, I have come to the conclusion that the radiation of heat from a carefully installed furnace may be expressed provisionally by the following formula, derived from that of Stephan:

(1) $w = aST^4 \theta$

where:

$w =$ the dissipated energy expressed in watt-hours.

$a = 3,125 \times 10^{-16.}$

$S =$ radiating surface of the bath of steel $= lc$ (l and c being the length and one side of the square section of the metallic bath).

$T =$ temperature (maximum absolute) $= 2,000°$ C .

$\theta =$ time in hours.

From the above it follows that:

$$w = 5\,l\,c\,\theta \tag{2}$$

Total Expenditure of Energy.

For a furnace of power W, producing P kgs. of steel per operation, during θ hours, the calorific expenditure would be equal to:

$$W\theta = 456\ P + 5\ l c\,\theta \tag{3}$$

Data of Construction and Output of Furnaces.

The preceding formula may be presented in another form. Admitting that the density of the liquid iron equals 7, we have:

$$7\ l\ c^2 = 1000\ P, \text{ or} \tag{4}$$

$$l\ c^2 = \frac{1000\ P}{7} \tag{5}$$

It may also be noted that at any given moment, we have:

$$W = \frac{E^2}{R} = \frac{E^2 c^2}{\rho\, l} \tag{6}$$

To avoid the introduction of new factors, we will suppose that the moment of commencing a furnace-run is the precise instant chosen for the verification of the preceding equation. At this moment we know approximately the value of $\rho = 216 \times 10^{-6}$, and we will assume that E equals 15 volts. We therefore, evolve from (6) the following equation:

$$\frac{l}{c^2} = \frac{104 \times 10^4}{W} \tag{7}$$

From the equations (5) and (7) we deduce:

$$l = 12200 \sqrt{\frac{P}{W}} \tag{8}$$

$$c = 0.108 \sqrt[4]{PW} \tag{9}$$

$$lc = 1318 \sqrt[4]{\frac{P^3}{W}} \tag{10}$$

This later value substituted in equation (3) gives:

$$W\theta = P(456 + 6590\ \theta \sqrt[4]{\frac{1}{PW}}) \tag{11}$$

Admitting that a single operation will occupy three hours, the time necessary for the reactions, we may show, by means of equation (11), the curves (Fig. 5) for the values of l, c and P, in terms of W. The actual figures are given in the following table:—

$$W = P\,(152 + 6590 \sqrt[4]{\frac{1}{PW}}$$

Watts. W	Weight of Metal. P	Length of Surface l	Width of Surface. c	Expenditure of energy per ton kilowatt hours.
100,000	430 kg.	800.32 cm.	8.75 cm.	697
200,000	360 "	844.24 "	12.71 "	625
300,000	1,525 "	866.2 "	15.79 "	590
400,000	2,100 "	884.5 "	18.38 "	571
500,000	2,680 "	890.6 "	20.66 "	560
600,000	3,275 "	900.36 "	22.73 "	549
700,000	3,875 "	905.24 "	24.64 "	542
800,000	4,475 "	912.56 "	26.41 "	536
900,000	5,075 "	915 "	28.07 "	532
1,000,000	5,680 "	916 "	29.65 "	528

APPLICATION OF THE MIXED PROCESS.

Again, taking up the figures of the preceding application (oxidation process), we may write the equation which represents the ensemble of the reactions thus:

$$\underset{\text{Pig iron.}}{\underline{x\,(16.6\ Fe + 3C + 0.6\ Si + 0.2\ Mn + 0.2\ P + \ldots .)}} + \underset{\text{Ore}}{\underline{yFe_2O_3}}$$

$$+ \frac{zCaO}{\text{Lime}} + \frac{uFe}{\text{Scrap}} = \frac{(17.7\ Fe + 0.8\ C + 0.1\ Si)}{\text{Finished steel.}}$$

$$+ \frac{(3x - 0.8)\ CO}{\text{Carbon monoxide disengaged.}}$$

$$+ \frac{x\,(0.5\ SiO_2 + 0.2\ MnO + 0.6\ CaO + 0.6\ FeO) + 0.1\ x\,(P_2O_5\ 4\ CaO)}{\text{Slag.}}$$

Taking, for instance, x as being equal to ⅔, we deduce from the preceding equation the following proportions as corresponding to the production of one ton of steel:

	Theory.	Practice.
Pig Iron	667 kgs.	670 kgs.
Fe_2O_3	145.70 "	210 "
Lime	40.90 "	45 "
Scrap	267.68 "	285 "

Consumption of Energy.

	Calories.
a—Heating bath of pig iron, $q_a = 670 \times 0.48 \times 450 =$	144,700
b—Heating the reagents, $q_b = (210 \times 0.19 + 45 \times 0.23) \times .1600 =$ ..	80,400
c—Chemical reactions, $q_c =$	48,900
d—Fusion and heating of the iron, $q_d = 285\,(410 + 0.48 \times 240) =$	149,700
e—Losses by radiation, $q_e = 5\,lc\theta$ watt hours.	

For a furnace of W kilowatts, producing P kgs, of steel for each run of θ hours, we have:

$$W\theta = 480\,P + 5\,l\,c\theta. \tag{12}$$

By making the same calculations as in the preceding case, we have:

$$l = 12200\sqrt{\frac{P}{W}} \tag{13}$$

$$c = 0.153\sqrt[4]{P\,W} \tag{14}$$

$$lc = 1863\sqrt[4]{\frac{P^3}{W}} \tag{15}$$

$$W\theta = 480\,P + 9315\theta\sqrt[4]{\frac{P^3}{W}} \tag{16}$$

By taking the value of $\theta = 3$, the equation may now be written:

$$W = P\,(160 + 9315\sqrt[4]{\frac{1}{P\,W}} \tag{17}$$

From these equations we may construct the curves as shown in Fig. 6.

COST OF PRODUCTION OF ELECTRIC STEEL.

In order to determine the cost of the steel, I assume that the electric furnaces receive the crude metal for a first fusion direct from the blast furnace. I base my calculations upon an annual production of 30,000 tons of steel.

a. Consumption of raw material per ton.

	Ore Process.	Mixed Process.
Pig Iron....................	925 kgs.	670 kgs.
Scrap Iron..................	— "	285 "
Ore with 75% Fe_2O_3..........	320 "	210 "
Lime	56 "	45 "

I admit that the preliminary production of the cast iron requires:

	kgs.
Ore	1,750
Slag of furnace	160
Various slags	160
Waste	80
Flux	500
Coke	1,100

b. Electric Energy.

According to above calculation, and assuming that we have electric furnaces of 650 kilowatts, we should spend:

Ore Process	Electric Furnaces	30,000x540=	16,200,000KWH
	Cowper and Mechanical Appliances	330x8000 =	2,640,000 "
	Total		18,840,000 "

Or for 8,000 hours of annual operation a power of 2,355 kilowatts.

Mixed Process	Electric Furnaces	30,000x600=	18,000,000 KWH
	Cowper and Mechanical Appliances	300x8000=	2,400,000 "
	Total		20,400,000 KWH

which corresponds to a power of 2,550 kilowatts.

In taking into account the losses and contingencies of all kinds, I calculate as follows:—

Ore process	2,400	kilowatts.
Mixed process	2,700	"

ORE PROCESS.

Schedule of Annual Expenditure or Cost.

I. DIRECTION AND MANAGEMENT................72,000 frcs.

II. RAW MATERIAL AND FUEL.

(a) Production of pig iron.

Ore	48,600 tons	@ 15 frs.	= 729,000 frs.
Slag	4,400	“ “ 3 “	= 13,200 “
Various slags	4,400	“ “ 6 “	= 26,400 “
Waste	2,250	“ “ 46 “	= 103,500 “
Flux	13,400	“ “ 6 “	= 80,400 “
Coke	30,500	“ “ 20 “	= 610,000 “
Miscellaneous			14,500 “
			1,577,000 “

(b) Conversion into steel.

Ore	9,600 tons	@ 15 frs.	= 144,000 frs
Lime	1,700	“ “ 20 “	= 34,000 “
Alloys of Iron	300	“ “ 250 “	= 75,000 “
Chromite	150	“ “ 110 “	= 16,500 “
Miscellaneous			8,500 “
			278,000 “

III. ELECTRIC ENERGY.

2400 Kilowatt Years @ 80 frs.......................... 192,000 frs.

IV. LABOUR.

Day shift, 60 men Night shift, 50 men	40,000 days @ 4.50 frs.	180,000 frs

V. MAINTENANCE AND REPAIRS................ 80,000 frs.

VI. GENERAL AND UNFORESEEN EXPENDITURE... 80,000 frs.

TOTAL....... 2,459,000 frs.

or, per ton of finished steel, about 82 francs.

MIXED PROCESS.

Schedule of Annual Expenditure.

I. DIRECTION AND MANAGEMENT.............. 72,000 frcs.

II. RAW MATERIAL AND FUEL.

(a) Production of pig iron.

Ore....................	35,000 tons @ 15 frs.	=	525,000 frs.
Slag	3,100 " " 3 "	=	9,300 "
Various Slags	3,100 " " 6 "	=	18,600 "
Waste....................	1,600 " " 46 "	=	73,600 "
Flux	10,000 " " 6 "	=	60,000 "
Coke......................	22,000 " " 20 "	=	440,000 "
Miscellaneous....................................			12,100 "
			1,138,600 "

(b) Scrap and waste iron.

8,550 tons @ 60 frs. .. 513,000 "

(c) Conversion into steel.

Ore	6,300 tons @ 15 frs.	=	94,500 frs.
Lime....................	1,350 " " 20 "	=	27,000 "
Alloys of Iron	300 " " 250 "	=	75,000 "
Chromite	150 " " 110 "	=	16,500 "
Miscellaneous			8,000 "
			221,000 "

III. ELECTRIC ENERGY.

2,700 kilowatt years @ 80 frs.......................... 216,000 "

IV. LABOUR.

38,000 days @ 4.50 frs............................ 171,000 frs.

V. MAINTENANCE AND REPAIRS................... 79,000 frs.

VI. GENERAL AND UNFORESEEN EXPENDITURE.. 80,000 frs.

TOTAL.........2,490,600 frs.

or, per ton of finished steel, 83 francs.

CONCLUSIONS.

In order not to be accused of undue optimism, I have based the preceding estimates upon prices sufficiently high, and I have assumed that the electric energy is leased. A combination of conditions more favorable would reduce still further the cost of production. It is not difficult to imagine a company who could obtain iron ore at 13 francs per ton and owning a hydraulic power. Under such circumstances, the electric energy would be available at 40 francs per kilowatt year, and the annual expenditure would be reduced by not less than 250,000 francs. The cost of production of 1 ton of steel would then be about 75 francs.

Fig. 1

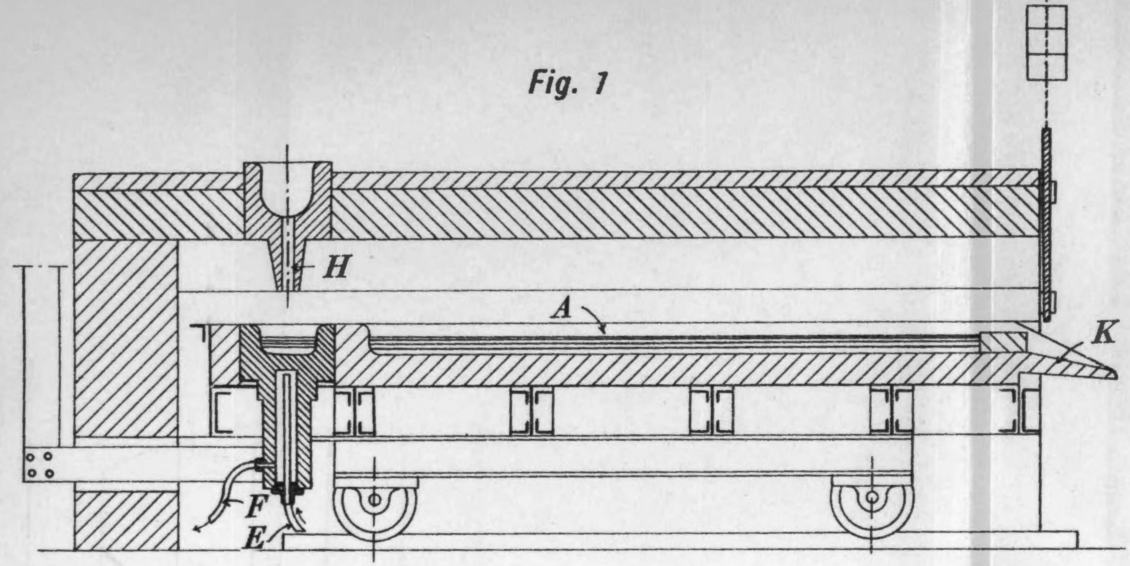

Fig. 2

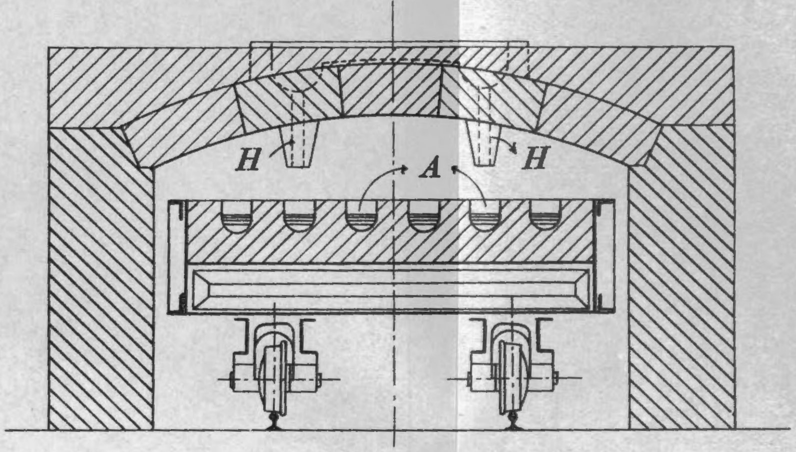

GIN ELECTRIC FURNACE

Fig. 3

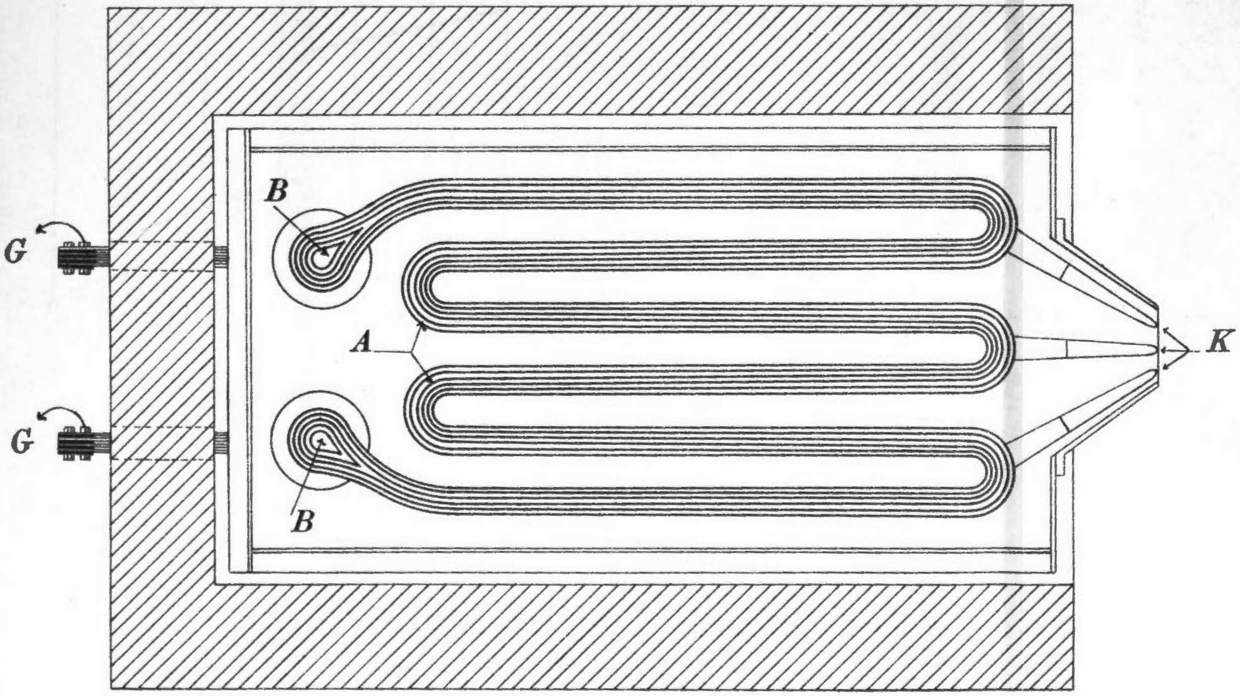

Fig. 4

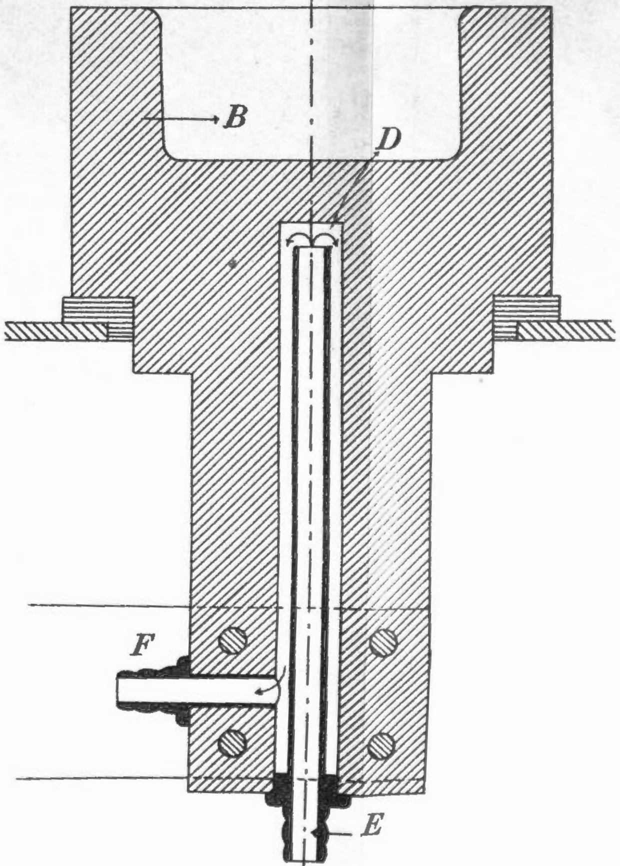

Fig. 5

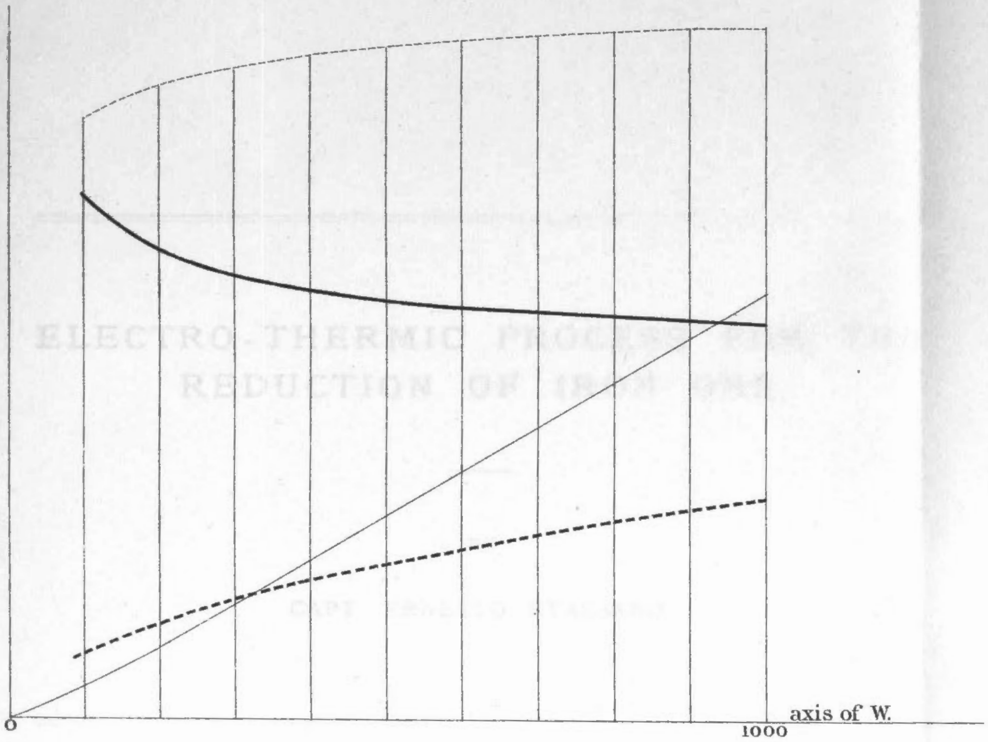

Fig. 6

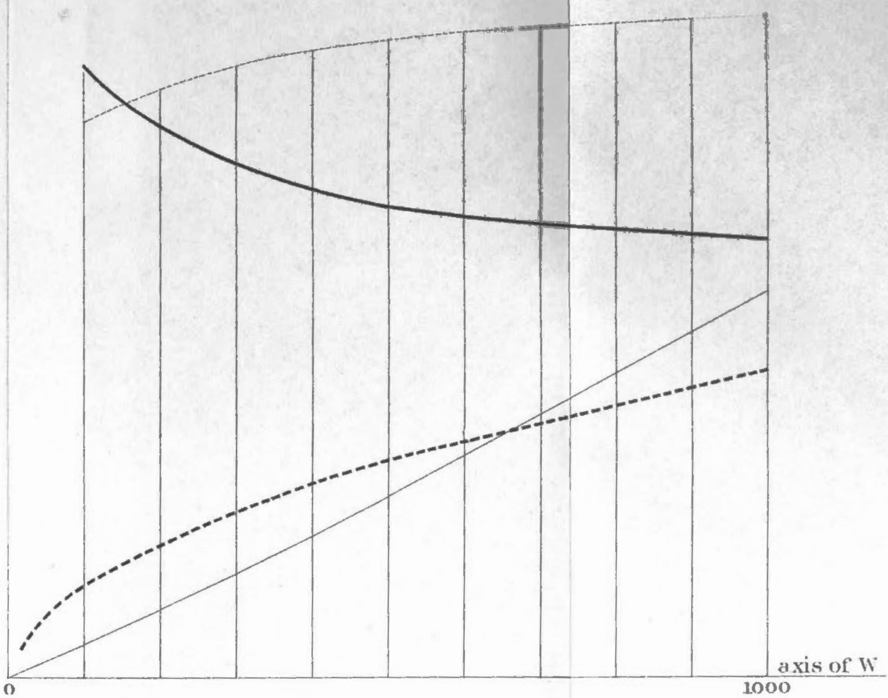

Scale

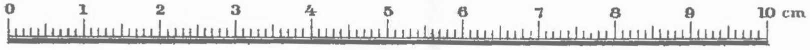

		Scale
curve ┈┈┈┈	value of l	1/100
" ‐ ‐ ‐ ‐	" " c	1/10
" ───	weight of metal per operation	1 ton 1 cm
" ━━━	expenditure of energy per ton	1 WH/ton 1/10 mm

ELECTRO-THERMIC PROCESS FOR THE REDUCTION OF IRON ORE.

BY

CAPT. ERNESTO STASSANO.

ELECTRO-THERMIC PROCESS FOR THE REDUCTION OF IRON ORE.*

BY CAPT. ERNESTO STASSANO.

In February, 1899, at a meeting which I had the honour of holding at the College of Engineers and Architects of Brescia, I made known the results of experiments which at the end of the preceding year I had made at Rome, first under the patronage of that distinguished gentleman, Commendatore Carlo Pouchain, and afterwards of the same person and of the Genoese knights and the engineer, Carlotti, to arrive at a solution of the important problem of the reduction of iron ores in electric furnaces.

The notices which, before this, had been given out about these experiments, and this meeting, had the result of arousing in the public mind a certain interest which was soon made manifest by the daily appearance of technical articles, in which my conclusions were discussed.

In general, the tone of such articles was not friendly; in fact, their dominant note was scepticism, some even were not without a certain bitterness. No critic, however, controverted my assertions with close and definite reasoning, based upon facts, and upon scientific and rational calculations.

Stranger as I am to barren and vague discussions, which rarely have a place in the lofty realms of science and of reasoning, but often, if not always, degenerate into sharp and bitter polemics, I did not reply to any such publications, especially as the lack of foundation, and the vagueness of the objections, had the effect of putting me in a position to demonstrate very easily their weakness, and the validity of the data upon which my views were founded.

However, about that time an industrial company was formed to apply my process in a plant of about 1,500 horse-power. In a relatively short time after this, experience would have decided and demonstrated, with the evidence of facts ,which side was right; for which reason also I kept silence, and sought rather to push on the construction of the works, to the extent of soliciting shares in an ordinary smelting business in order to furnish this practical demonstration of the greater or less justice of my assertions.

---

* From the Italian.

However, a series of unfortunate circumstances, which it is not necessary to enumerate, circumstances entirely independent of my will and of my acts, and even more so of errors in my technical and financial calculations—having brought this company to a state of liquidation, just at a time when, after having passed the critical period of installation, and having demonstrated the complete success of my process, it was possible to enter into that fruitful and profitable state of industrial work—has sensibly modified the situation, obliging me to throw off that reserve which was, till now, imposed upon me.

Dealing, therefore, with the purely scientific field, and without entering into discussions which do not esentially affect the question, and regarding the foundation principles and industrial operation of the process which I propose, I shall address myself to expounding the general conceptions to which I have directed my studies, and the results obtained from the long and laborious experiments performed.

From this exposition in detail, the learned public can gain all the data necessary to make themselves familiar with my work, and to judge calmly and dispassionately if it should remain a sterile and unfruitful effort, or should be destined to have practical and profitable industrial application for the benefit of those countries, which like ours, are rich in water-power (hydraulic mortor forces), but almost or altogether without coal, and have been until now precluded from taking part in great metallic industries in general, and iron industries in particular, with grave loss to the wealth of the nation.

The utilization of heat obtained from the electric arc for metallurgic operations was certainly not new when my attention was directed to this important problem. Memorable indeed are the experiments performed by Siemens with his electric crucible, towards the end of 1879, which, however, are no more than mere scientific curiosities.

To find instead industrial applications of the heat radiated from the arc, we must come to the appartus of the American, Cowles, for the preparation of the alloys of aluminium, and after that to the electric furnaces of Wilson, for the manufacture of carbide of calcium, and to those for the preparation of corborundum; and between these industrial applications of heat obtained from the arc, the most important, though purely scientific, experiments of Moissant.

However, if the scope of all these different attempts be carefully examined (though they are theoretical rather than practical, and particularly these last, which have a more direct interest for us), it is easily seen that their aim was the industrial production of substances which can be obtained only at the highest temperature of the arc, and which, hence, in the past, were practically unknown, or produced only in the scientific sense, that is, in the smallest quantities, and with the greatest difficulty.

They had recourse, in short, to this new source of heat to obtain—whether in an industrial or in a purely scientific sense—the production of substances either altogether new or little known, and such as require laborious manipulation for their preparation, and they did not seek to use this means as a substitute for the old and only industrial source of heat, that is to say, combustion, in the ordinary metallurgic processes in general, and in iron smelting in particular.

Very different, then, was the scope of my researches, which aimed, on the other hand, at finding out definitely if this new source of heat could be advantageously substituted ordinarily in the various metallurgic processes employed in the industrial world, and at determining, in case that this were possible, the series of practical arrangements to be adopted in order that this substitution might be rendered successful.

Two difficulties then presented themselves to me from the first, on which it was necessary that I should fix my attention in order that I might be assured whether the grave problem which I wished to solve could have a practical and real solution. It occurred to me, namely, to establish, in the first place, whether the cost of a unit of heat generated from the transformation of electric energy into thermic energy would be sufficiently low to render possible (economically speaking) the substitution of the new source of heat for that hitherto used.

Actual practice would certainly have given exact and manifold indications of the answer to both questions; however, before undertaking the difficult and costly experiments which would be necessary, I endeavored to find out, by means of preliminary calculations, based upon data both of theory and practice, whether it were possible to arrive at conclusions (especially in regard to the first question), sufficiently approximate and tenable.

The attempt was not unfruitful. It is known, indeed, that, considering the low percentage of oxygen contained in the atmospheric air (about 21% in volume), the single active element to which is assigned the duty of providing food for combustion in the ordinary furnaces, and considering the necessity which appears in them, of forcing upon the carbon a quantity of air varying from one to two times as much as that which would be strictly necessary to burn the carbon of the fuel, a great part of the heat arising from the combustion is entirely lost, being absorbed by the nitrogen of the air, and by the excess of air which must be forced into the furnace to assure the complete combustion of the carbon.

The fact is, therefore, that the utilization of the potential heat of the fuel (I shall speak thus in order to be understood), in the ordinary furnaces is maintained to a very limited and low degree, varying, in fact, from 2% to 3%, and even less, in the ordinary fires of a forge, rising to

10% in the common reverberatory furnace, and reaching the maximum of 18% to 20% in those modern gas furnaces with regenerators (Martin-Siemens' type). Only in the cupola furnace, and in the most recent blast furnaces perfected for re-heating the air, are such limits exceeded, reaching about 30% in the first, and 50% in the second.

With the exception, then, of these furnaces, which, because of the peculiarity of their form, are suited only to specific processes of iron-smelting (that is to say, the first to the simple fusion of pig, the second to the reduction of iron ore), in the other heating apparatuses used in metallurgy the utilization of the heat of fuel does not exceed, in the most favorable possible conditions, 18%, or at the most, 20%.

Therefore, in practice with the best coal (which because of the greater or less humidity at the time of its use, of the state of purity which it presents, &c., produces always a thermal energy inferior to what it has in theory), we cannot calculate upon a thermal energy that can be utilized greater than:

$$\frac{7500 \times 20}{100} = 1500 \text{ calories}$$

for each kg. of carbon consumed in the best possible conditions.

It follows, logically, from this that the industrial employment of heat produced by the transformation of electric energy, is practically possible and advantageous whenever 1,500 calories obtained by such means costs less than, or at the most as much as, one kg. of good coal in the localities in which the existence of rich deposits of coal render the great metallurgic industries possible and profitable.

Now, remembering that the term dynamic horse-power indicates the work of 75 kg/m, equivalent to the electric energy of 735 watts, and adopting for the present the mechanical equivalent of heat as 425, that is to say, that the work of 425 kg/m., must be transformed to obtain one calorie, it is easily seen that the electric energy of 735 watts expended for one hour continuously (which hour afterwards I shall call an electric horse-power hour), transformed into heat by means of the arc, corresponds to:—

$$\frac{75 \times 3600}{425} = 635.3 \text{ calories}$$

Naturally, not all this heat can be utilized and transformed into thermic energy, effective and able to be used, because the furnaces in which the transformation takes place absorb of themselves a part of the heat, which results in pure loss. Lacking, therefore, in this case the combustion, and hence the cause and the prime reason for replacing the loss of heat which takes place in the ordinary coal furnaces, the coefficient of utilization of the electric furnace should be very high, provided (it is well understood) that convenient arrangements will reduce the other losses usually produced by the transmission through the walls of the furnace, by the mechanical effects, and by the convection of the surrounding air along the external walls of the furnace itself.

And that this may be easily obtained is demonstrated by the fact that in the ordinary furnaces similar losses are always less than 10% of the energy expended in their interior.

It is well also to remember here that the learned English metallurgist, Sir Lowthian Bell, in his masterly treatise, "Principles of the Production of Iron and Steel," calculates at about 4% the loss of heat through radiation, mechanical effects, and convection in the blast furnaces, which, because of their structure, present a vast radiating surface.

80%, we are certainly not far from the truth. With this coefficient of the
Fixing, then, the amount of heat set free by the electric furnace at utilization of heat, out of 635.3 calories obtained from the transformation of one electric horse-power hour into heat remains capable of being utilized:—

$$\frac{635.3 \times 80}{100} = 508.24,$$

or, in round numbers, 500 calories.

Hence, to obtain with electricity the thermic energy which is obtained in the ordinary furnaces from 1 kg. of good carbon, burned under favorable conditions, it is necessary to employ:—

$$\frac{1500}{500} = 3$$

electric horse-power hours in the new apparatus.

Therefore, the new source of heat is practically possible and profitable whenever three electric horse-power hours cost less than, or at most as much as 1 kg. of coal in a locality rich in coal, in which, therefore, the smelting industry can exist and prosper.

Let us see, then, if these conditions can be realized and to what extent.

From the following table, drawn from the statistical data collected by the technical offices of finance for some of the provinces of the kingdom, it appears that on the average, in the recent hydraulic plants of a certain degree of importance established in Italy, the cost of the plant per dynamic horse-power, on the axis of the turbine, including the turbine itself, varies from 150 to 200 lire.

Adding to these 100 lire per horse-power for the electric part, a figure a great deal larger than necessary, it is seen that on the average the electric horse-power costs for installation from 250 to 300 lire, a value which agrees perfectly with those of many plants which I have had occasion to visit, and of which I am in a position to know the exact cost.

Table of average values of motor power for each province, computed in the year 1897-1898:—

No.	Provinces.	Cost for the Effective Installation of each Horse-Power.					
		Motor Forces.					
		Hydraulic.			From Steam or from Gas.		
		Min.	Mean.	Max.	Min.	Mean.	Max.
1	Alessandria	350	220	150	700	350	130
2	Cuneo	400	250	150	300	450	130
3	Genova	1200	600	200	900	350	200
4	Massa-Carrara	500	300	200	600	500	400
5	Modena	600	200	150	800	550	750
6	Novara	300	130	130	300	400	200
7	Parma	700	300	200	700	350	180
8	Piacenza	700	300	200	700	300	180
9	Pavia	350	220	150	700	300	180
10	Porto Maurizio	1000	600	200	1000	450	200
11	Reggio Emilia	1200	600	130	1000	600	200
12	Torino	300	180	150	700	400	180
13	Brescia	700	150	120	600	300	150
14	Cremona	1000	800	650	800	220	180

Allowing 10% per annum on the capital for interest and depreciation, and calculating at 10 lire a year per horse-power, the expense of operating, and the maintenance of material, we reach the conclusion that the cost of an electric horse-power year will be 40 lire, and hence, supposing the plant to be used for only 7,000 hours a year, the cost of the electric horse-power hour will be:

$$\frac{40}{7000} = 0.0057 \text{ lire.}$$

From this it follows that the three electric horse-power hours, equivalent, as regards thermic energy, to 1 kg. of good anthracite, will cost 0.0057 x 3 equals 0.0171 lire. This signifies, that, when electric energy can be obtained under the average conditions of the greater part of the large plants until now established, when it is used in the place where it is produced and transformed into heat in the metallurgic sense, this heat costs the same as that produced in the ordinary furnaces which are most recent, and adapted to a fuel capable of developing 7,500 calories per kg., which can be obtained at the rate of 17.10 lire a ton, a price cer- of determining all the practical particulars to attain the industrial realiza- tainly not high, even in countries rich in coal.

The problem was then capable of a practical and profitable solution; it was worth, moreover, the trouble of accurate research, with the aim tion of the desired idea.

Encouraged by the favorable results of this preliminary calculation, I undertook the investigation of particulars, seeking, in the first place (without losing sight of the general problem of applying this source of heat to metallurgy in general), to make it of value in the production of iron from its ores; because the various iron products are acquiring as first material a continuously increasing importance in modern industry through the low price which they have in the market, and they are particularly the materials most commonly used in commerce; wherefore, the cost of fuel becomes a factor of the first importance in the expense of production —so much so as to render, indeed, impossible, or almost so, the iron industry in those countries which, being unprovided with coal, are forced to import it, and consequently, obtain it at a high price.

So also in this case, before preparing to obtain practical proof, I wished to examine the field, by means of previous calculations based upon scientific and practical data already known, with the purpose of assuring myself, if it was possible, and worth while to solve this weighty problem.

Now, if we call to mind the manner in which the reduction of iron ore has, up to the present, taken place in the blast furnaces employed for this purpose, we may easily understand that the coke employed in them performs during the processes two quite distinct and special functions. Burning with the oxygen of the air, it produces the heat necessary to effect the decomposition of the crude ore, and the fusion of the sponge of iron produced, and of the slag accompanying it, acting thus as a source of heat. Besides, it furnishes the carbon necessary to saturate the oxygen of the oxide of iron of the ore, which is set free in the act of its decomposition. and which, under the form of oxide of carbon and carbonic acid, is expelled from the furnace, together with the nitrogen of the air necessary for the combustion of the coal. This comprises, therefore, the work of the reducing element.

In consequence of this, it should be remembered from the first that in making the proposed substitution of heat radiated from the arc for that produced from the combustion of carbon in the production of iron, it was not possible to eliminate completely the use of carbon, which needs always to be added to the ore in a quantity sufficient to furnish the carbon necessary to saturate the oxygen of the ore.

Therefore, since this carbon should be transformed into CO rather than CO_2, because only the first of these compounds of oxygen and carbon is permanent at high temperature, the fuel so employed cannot be considered as consumed during the reducing operation, in which it is subjected to a simple transformation into gaseous fuel, in which new state it can be collected and used for the successive processes which the metallic product received from the electric furnace require to pass through.

On the other hand, when we consider that, knowing the exact composition of the ore and of the carbon to be added to it as a reducing element, it is possible to calculate exactly the quantity of carbon to be mixed with the ore, we recognize at once that, having succeeded in rendering practicable the substitution of the new source of heat for the old in furnaces for the reduction of iron ores, it should be possible to obtain directly malleable products without the intermediate stage of castings, which, of necessity, must have a place with the ordinary blast furnace.

And this is evident because in the blast furnace the carbon performs the two functions of reducing element and source of heat. It is necessary, therefore, in order to insure the success of the operation, always to charge carbon in excess. As a result of this, the iron produced being in the nascent state in contact with carbon, absorbs a perceptible quantity of it, losing thus its characteristic malleability.

After these considerations of a general kind I passed to the calculation of the amount of heat which would be necessary to effect the reduction of a determined quantity of iron ore, and the fusion of the metal obtained, and its attendant slag, in order to find out the quantity of electric energy which it would be necessary to expend for the production of a certain quantity of iron with this new system.

The comparison of the cost of this energy with that of the carbon necessary in the ordinary processes to reach the same result would give a sufficiently approximate idea of the greater or less expediency of adopting such a system.

The results of such a comparison, which experience has since fully confirmed, were gratifying, so that, after having thus examined in all its particulars the question a priori, I undertook forthwith the practical experiments.

Before passing, however, to the exposition of the results of the numerous and exhaustive experiments performed, I think it will not be useless to set forth such preliminary calculations as will render it more easy afterwards to estimate and appreciate justly the practical results.

Let us suppose we are working with 100 kgs. of iron ore, say the specular iron ore of the Island of Elba having the following compostion:

Fe_2O_3	93.020	%
MnO	0.619	“
SiO_2	3.790	“
P	0.058	“
S	0.056	“
CaO, MgO	0.500	“
Moisture	1.720	“

Having made the necessary calculations for the charge, and for the carbon necessary to absorb the oxygen of the Fe_2O_3, which I omit for brevity, the result is that the mixture of ore, carbon and flux with which the furnace is to be charged, should be thus proportioned:

Ore	100.00
Carbon	23.00
Lime	12.50

The carbon and the lime to be added should have respectively the following compositions:—

C	90.42	%
Ash	3.88	“
Moisture	5.70	“

CaO	51.21	“
MgO	3.11	“
Al_2O_3, Fe_2O_3	0.50	“
SiO_2	0.90	“
CO_2	43.43	“

In detail, then, to reduce the 100 kgs. of the ore above mentioned, there would be introduced into the furnace:

93.020	Kgs. of	Fe_2O_3	with ore
0.619	“	MnO	“ “
3.790	“	SiO_2	“ “
0.058	“	S	“ “
0.056	“	P	“ “
0.500	“	CaO, MgO	“ “
1.720	“	H_2O	“ “
20.900	“	C	with carbon
0.892	“	Ash	“ “
1.210	“	H_2O	“ “
6.401	“	CaO	with lime
0.389	“	MgO	“ “
0.062	“	Al_2O_3, Fe_2O_3	“ “
1.125	“	SiO_2	“ “
5.429	“	CO_2	“ “

Now, holding at present that:—

(a) to effect the decomposition of one molecule of Fe_2O_3 (160 gr.) we require .... 192.000 cal.

(b) to evaporate 1 Kg. of H_2O transforming it into vapor at 100°, we require .... 637.000 “

(c) to raise by 1° the temperature of one Kg. of aqueous vapor at 100°, we require .... 0.480 “

(d) to calcine 1 Kg. of lime we require .... 425.000 “

(e) to raise by 1° the temperature of one molecule of CO_2 (44 gr) we require .... 0.016 “

(f) to raise by 1° the temperature of one molecule of CO (28 gr) we require .... 0.0068 “

(g) to melt 1 Kg. of iron we require .... 350.000 “

(h) to melt 1 Kg. of slag we require .... 600.000 “

(i) by burning 1 Kg. of C into CO there are developed ...2175.000 “

And supposing that the volatile products of the reactions escape from the furnace at a temperature of 500°, it will be quite evident that the heat necessary to reduce 100 kgs. of ore, and to melt the resulting products, amounts to 111,940,627 calories, namely:—

For the reduction of the ore:		
$\frac{93.020 \times 192}{0.160}$	Calories	111,624.000
For the evaporating of the H_2O of the ore and of the carbon:		
$(1.720 + 1.210)\ 637$	"	1,866.410
To raise to 500° the aqueous vapor:		
$2.930 \times 0.48 \times 400$	"	562.560
To calcine the lime:		
12.500×425	"	5,312.500
To heat to 500° the CO_2 resulting:		
$\frac{5.429 \times 0.016 \times 500}{0.044}$	"	987.090
To heat the CO, which is produced by the reduction of the Fe_2O_3:		
$\frac{20.900}{0.012} \times 0.0068 \times 500$	"	5,921.667
To melt the iron produced:		
$\frac{93.020 \times 0.112}{0.160} \times 350$	"	22,789.900
To melt the slag:		
13.890×600	"	8,334.000
Total	"	157,398.127

Deducting from this the calories developed from the combustion of C changed into CO, that is:—

20.900×2175 .... 45,457.500

There remain .... 111,940.627 Cal.

to furnish, which, allowing that the available heat of the electric furnace is 80%.

$$\frac{111{,}940.627}{635.3 \times 0.80} = 220.25$$

electric horse-power hours. And, therefore:

$$\frac{93{,}020 \times 0.112}{0.160} = 65.114 \text{ Kgs. of iron}$$

For each kg. of iron reduced we require:

$$\frac{220.25}{65.114} = 3.383 \text{ electric horsepower hours}$$

Now, to produce 1 ton of iron, substituting the new thermic source for the carbon employed in the ordinary processes, we need 3,383 electric horse-power hours, which, at the price of 0.0057 lire, means an expenditure of 19.28 lire; opposed to which is the cost of fuel in the ordinary processes needed to produce about 1,150 kgs. of pig, in the blast furnace, and besides what is necessary to refine it and change it to a malleable product.

Now, among all the modern processes for refining pig, the most economical with respect to the amount of carbon consumed is certainly that which had begun to be employed in some steel works in which the pig just tapped from the blast furnace is treated in a Bessemer converter, saving thus the re-melting in the cupola furnace, and the shrinkage which takes place in the metal in this second fusion. Let us see, therefore, how much carbon is necessary in this case, supposing that the heated fuel gas escaping from the blast furnace may be employed to work the blow-pipes, and all the accessory mechanism of the converters.

With a rich ore, as that of which I have above given the composition, in a blast furnace well constructed, provided with improved apparatus to pre-heat the charge, and with all the best of the recent suggestions of modern metallurgy, the consumption of fuel per ton of pig can be reduced to a minimum of 800 kgs. of good metallurgic coke, to obtain which it is necessary to use at least 1,100 kgs. of coking coal. Thus, to produce the 1,150 kgs. of pig which must be charged into the converter for each ton of malleable product in ingots received from the refiner, there are needed:

$$\frac{1100 \times 1150}{1000} = 1265 \text{ Kgs.}$$

of coking coal. Supposing that this costs as much as the electric energy which we have seen to be necessary for its production with the electric heating system proposed, namely, 19.28 lire, it follows that the required carbon would cost:

$$\frac{19.28}{1.265} = 15.22 \text{ lire per ton}$$

a price which, if it is somewhat higher than that for which coal can be obtained in many localities of England, Belgium, Germany, &c., will never be reached in countries which are not provided with coal.

Now, if it is considered:

1st.—That in the above calculation referring to the consumption of coal, I have supposed that the work is carried on under the most favorable conditions.

2nd.—That not always, even in refining the pig with the Bessemer process, is the metal just tapped from the blast furnace used, nor are the heated fuel gases escaping from the blast furnace always employed to de-

velop the motive force necessary for the blow-pipes, and for the accessory apparatus for working the converters, and that in this case, to the carbon necessary to produce the pig, there must be added at least another 300 or more kgs. of carbon per ton of final product.

3rd.—That when using, on the other hand, the Martin-Siemens' process, the consumption of carbon per ton of malleable product is from 4 to 500 kgs. additional to that necessary to produce the required pig.

4th.—That, finally, the iron and steel produced in countries rich in coal, when they reach those which are not so provided, Italy, for example, are burdened with the cost of transportation, equal to, or even greater than, the cost of the fuel necessary to produce them.

It is easily recognized that, if we succeed in rendering practical the projected substitution of the heat from the arc, for that obtained by combustion, with apparatus that is practical, simple, easily managed, and able to utilize 80% of the energy expended in it, the problem will be completely solved, both in the economic or technical sense, and it will be possible to inaugurate and develop a flourishing and vigorous metallurgic industry in many countries where, for the lack of fuel, it has been impossible to realize this.

After this I could calmly begin the experiments, the scope of which has been so definitely outlined. One other doubt, however, kept me from commencing operations at once upon a large scale, which was the fear lest at the high temperature which would prevail in the new furnaces, the reactions from which the reduction of the ore was to be produced, would not take place as they took place at a lower temperature, but would give place to successive decompositions and recombinations, which would radically modify the consumption of energy already established; and that the metal produced in conditions of temperature so different, would assume an allotropic state differing from that which it ordinarily assumes, and which therefore, could not be successfully utilized.

A preliminary series of experiments, made on a relatively small scale, convinced me of the lack of foundation for my doubts, after which I undertook definite experiments, which were performed with a furnace that used 130 horse-powers near the central electric station of Rome, at the Ste. Maria dei Cerchi shops.

This furnace, represented by the figures 1a and 2a, was essentially constructed from a small blast furnace, with a small enclosure, in which, at the places of the tuyeres for the introduction of air to feed combustion, the two carbon electrodes were inserted, between which the arc was established.

The electrodes, placed upon elongations of two strong copper rods to which were fastened the cable conductors, could be easily operated by means of three groups of conical cog-wheels, controlled by a special operating wheel and shaft, which is shown by the fig. 2a.

A hopper, with double lids placed in the higher part of the furnace permitted successive chargings of the ore in such a way as to eliminate completely, or almost so, during the charging the escape of the volatile products which were formed in the furnace. Two apertures placed in the upper part of the internal lining of the furnace, and prolonged to the exterior by means of two suitable tubes, also represented in the figure, served to conduct to the exterior the gas which was generated in the furnace during the process, which, before being collected and utilized, passed through a hydraulic valve (barilet), shown also in fig. 2a.

Making allowance for small inconveniences in details arising from the nature of the lining at first adopted, and from the form of the electrode-holders—inconveniences which were found in the first experiments—the furnace worked quite regularly from the first, showing a complete correspondence between the theoretical data calculated a priori and those obtained by experience, whether we consider the chemical aspect of the process or the utilization of the heat radiated from the arc.

The hope, then, of being able to reach a practical solution of this important problem, to which the preliminary study and the first experiments had given rise, was transformed into certainty after this second series of experiments, although some defects in the accessories of the furnace and of some other secondary particulars were made evident, these experiments had not alone confirmed entirely the accuracy of the premises from which I had started, but also furnished methods of eliminating those difficulties which had arisen during the experiments.

After having modified, however, some of the particulars of the furnace, for example, water-jacketing the electrode-holders to prevent their being heated to excess, which had several times caused their fusion, and changing the arrangement of the hopper, I began a new series of experiments with the same furnace, as soon as the hydraulic electric plant of the Darfo office was partly finished, so as to permit me to use one of the alternators there installed.

On this occasion my aims were these: To show that many of the modifications made in the furnace as a consequence of the experiments at Rome, accomplished exactly the purpose for which they were devised; to devise others in order to improve still more the working of the apparatus; to find out what power of current was best adapted; to establish the dimensions of the furnace, and so forth.

However, being able to prolong the work for several consecutive hours (a thing which, at Rome, through the exigencies of the public service, for which the general station, from which I received the current, was designed, I was never permitted to do), an inconvenience which, at first, was not manifest, began to make itself apparent.

To give an account of this inconvenience, which, as will be seen afterward, led me to modify radically the form of the furnace, it is desirable to go back a little and to examine the method in which I had prepared the ore at first for charging, and how I managed the charging, and proceeded with the work.

It is known that in the ordinary blast furnace the reduction of ore is due to the action of carbonic oxide rather than to the direct action of carbon upon the oxide of iron in the ore itself, which oxide of carbon is generated in the lower part of the furnace, and which, coming into contact with the oxide of iron at the temperature of decomposition of this latter, appropriates its oxygen that it may become carbon dioxide, and leave the metal free.

This condition naturally would not be verified in the case of the electric furnace, because, there being no combustion, the oxide of carbon, which acts as the essential reducer in the blast furnace, would be wanting; hence, to be able to reach the desired aim, it was indispensable to arrange that near to each particle of oxide of iron should be found that particle of carbon designed to absorb the oxygen—a fact which led to the necessity of pulverizing the ore and carbon, and mixing thoroughly the two pulverized substances in the desired proportions.

To make more thorough and stable the mixture of the pulverized substances, which, on account of their different densities, would have easily separated according to their respective weights, I thought of uniting the mixture with an agglutinative substance, such as tar, resin (pitch), or the like, reducing it by compression into a conglomerate mass, which would then be introduced into the furnace.

Operating in this way, the charging of the furnace was managed in the following manner. After having heated the furnace for some time, by means of the arc, without charging it at all, I introduced into the furnace itself an iron grating of such dimensions as to stop in the interior cavity at 20 centimetres above the arc. Then, from the hopper I commenced to charge into the furnace the mixture, which, naturally, was stopped by the grating.

After a certain time the grating became fused by the heat of the arc; the ore, therefore, which was in contact with the grating during the time in which the latter was being gradually heated to the melting point, began in its turn to be reduced; in this state the single bits of the conglomerate mixture which lay upon the grating became fused together, forming above the electrodes a sort of arch, which remained intact and supported the superimposed charge, even when the support of the grate was withdrawn.

In proportion as the heat radiated from the arc spread through the mass of ore so situated, the reduction of the oxide of iron took place, and the fused metallic mass, in the fluid state, passed through the ore not yet reduced, and dropping from the arch, fell upon the bottom of the crucible, where very soon it constituted the metallic bath which, from time to time, was drawn off through the tap-hole.

A similar process would go on with the slag, which assuming the basic nature of the lining of the furnace, would become very basic, and hence difficulty fusible; its fusion would not then be parallel to that of the metal, so that after ten or twelve hours of continued fusing, the space existing above the arc presented a layer of notable thickness, composed of compact and hard slag. This absorbed, to a great extent, the radiation from the arc, thus preventing the heat from being transmitted to the ore above, which, therefore, was reduced with great difficulty, and also prevented the heat from reaching the small amount of metal which was produced. Under these conditions, I could go no further, and was forced to suspend operations.

This fact, the seriousness of which anyone can understand, gave me great anxiety, because if it was not possible to eliminate completely this difficulty, it would have compromised the final success of the desired process.

However, after long and patient researches, and numerous experiments, I succeeded in establishing that, by making the mixture to be reduced pass below the arc instead of placing it above, as I had up to that time done, although the material was all at once exposed to the high temperature of the furnace, and not heated gradually, as was the case with the blast furnace, the reactions took place just the same, and the metallic bath was formed without any inconvenience.

After these favourable results, I abandoned without hesitation the funnel form at first given to the furnace, and adopted the hearth or refiner's shape. So transformed, the furnace, as may be easily understood, became suitable not only for the treatment of mixtures of ore, but permitted the refining of the pig by the reaction process (Martin-Siemens), and could also be employed as a simple fusion furnace.

When, however, air was not to be admitted to the furnace to effect the refining of the pig, it was necessary to introduce sufficient ore to furnish the oxygen required to burn the impurities, following the method ordinarily employed in the metallurgy of iron, and known by the English name of ore-process, in which the ore, being reduced, sets free the oxygen which should oxidize the impurity of the pig.

Numerous experiments performed with the furnace so transformed demonstrated clearly that in practice, as a result of the modifications above indicated, iron, steel, and compounds of iron with other metals, such as manganese, chromium, nickel and others, could be produced, whether directly from the ore or by refining the pig by the ore-process, and fusions could be effected of masses of iron and steel from pieces, both large and very small, of these metals.

The figures 3a, 4a, 5a and 6a indicate clearly the manner in which I modified the primitive high furnace in consequence of the experiments performed- of which I have before spoken. For the greater clearness of these designs, which represent the first furnace of 500 horse-power constructed at Darfo, it will be well to add, that in it the movement of the electrodes, in place of being accomplished mechanically by means of the group of conical cog-wheels employed in the first furnace of 130 horse-power adopted at Rome, was effected by means of hydraulic pistons located above and away from each carbon.

During these experiments, however, while the new arrangement showed very distinct advantages, there appeared an inconvenience which, in certain circumstances, was not without grave and deplorable consequences, namely, when reducing fusion was carried on in the furnace, the utilization of the heat expended in the furnace became notably inferior to that which was possible when the furnace was used for simple fusion.

The phenomenon was not difficult to explain. However little experience one may have in this matter, one can easily understand that when effecting the reduction of the ore, as well as the refining of the pig, there is a period in which the reactions are most active, and which coincides exactly with the beginning of the operation, while by degrees, as the reduction of the ore or the refining of the pig reaches its conclusion, these reactions take place more slowly, because the contact between the particle of oxide to be reduced and the carbon which should absorb the oxygen, or between the oxide of iron and the manganese, the silicon or the carbon itself of the pig (in case of the process by reaction), becomes more difficult and infrequent.

It follows, logically, that in the first period the quantity of heat absorbed by the material to be treated is greatest while the quantity necessary becomes continually less as the reaction approaches conclusion, at which time it is sufficient to supply the furnace with the thermal energy strictly necessary to replace the loss, which the furnace will itself show, by maintaining the fluid bath and allowing the last operations of refining to be effected.

Now, in this period, which, in order to be understood, I shall call "the digestion of the bath," it is possible, with the ordinary coal furnaces, to manage the fires economically by reducing to a minimum the draft of the chimney, while in the case of the electric furnaces, this thing is not equally possible, both because it is not possible to reduce at will the quantity of energy which is to be expended on the arc without encountering the grave inconvenience of making the arc excessively unstable; and because in an hydraulic electric plant, in operating without a full charge, there is no economy in expense, but rather a proportionate reduction in the power of the plant, which leads to a pure loss.

To eliminate, therefore, this inconvenience, I thought of constructing furnaces so that they could be operated with two or more arcs. In this manner by establishing all these at the same time, or by extinguishing some, and at the same time reducing as far as possible the amount of energy to be communicated to those that are active, it would be possible and easy to make the quantity of heat to be given out vary within wide limits; while by keeping two furnaces at the same time in action, it would be possible to have the generating station always working with a full load, and hence in the best conditions for doing the work, although care should be taken to regulate the operations that are to be carried on in the two furnaces so that when the maximum amount of heat is needed in the one, only a little requires to be spent in the other, and vice versa.

Figures 7a, 8a, 9a, and 10a represent such a furnace in which the number of pairs of electrodes, and hence of arcs, is fixed at three. The clearness of the figures makes it unnecessary for me to give a detailed description. I shall limit myself merely to point out that here also the movement of the electrodes is effected by hydraulic pistons controlled at a distance from the operating valves.

With furnaces so constructed, besides eliminating all the grave inconveniences which I have above pointed out, there is obtained also the very decided advantage of multiplying the capacity and consequently the potentiality of each furnace, enabling it to be operated with the highest intensity of currents which can be carried by the electrodes, and which modern industry is in a position to furnish.

In view, however, of the complicated nature of such a type of furnace, whether through multiplying the number of electrodes which must be regulated in it, or, and more especially through the fact, which I have already pointed out, that to utilize completely the energy placed at our disposal by the generating station, it is necessary to have two furnaces operating at the same time, the operations being regulated in each of them in such a way that, to the maximum need of heat in one corresponds a minimum power of current in the other, I thought of studying some other arrangement which, permitting me to shorten the period of digestion of the bath, would place me in a position to work with the greatest possible economy of current, as well as without varying the quantity of energy to be transmitted to the furnaces according to their requirements.

Now, the high temperature which is obtained with electric furnaces facilitates, notably, the combination which takes place in the reduction of ore, and in the refining of pig. Of this I have had strong confirmation from all the experiments performed. Provided, then, that I were to succeed in adding to this favourable condition represented in the furnaces already constructed, some arrangement which would permit me to treat and remove the metallic mass during the reducing fusion, I would have completely attained my object.

It is known, indeed, that a remarkable economy of time and fuel is obtained in the operation of refining pig by the process of Martin, of Pernot, with his furnaces (with movable hearths), concerning which Bell, in the work mentioned above, referring to the results obtained with them at the works of Saint-Chaumond, thus expresses himself:—

"The averáge of work in 1877, during four weeks, was 3.27 charges in 24 hours, in the place of two charges as in the furnace of Siemens."

"In the place of 600 kgs. of coal per ton of ingots, a reduction was made to from 450 to 500 kgs. In the same year the average of the different charges was 4.09 in 24 hours, and the consumption of coal was reduced at least to 400 kgs. per ton of ingots. The iron and the pieces of steel were placed cold on the first hearth."

The path for me to follow was, therefore, clearly outlined. To obtain, however, good conditions, it was necessary for me to find a means of eliminating (adopting the idea of the movable hearth) the grave difficulty which is seen in the Pernot furnaces—to which is essentially due the limited use that has been made of this furnace. The difficulty proceeds from the fact that these furnaces should inseparably consist of a fixed part, within which are placed the gas and air pipes, and of a movable part, consisting of the hearth, which are protected by surfaces consisting of refractory materials.

If, then, a portion of refractory material is detached from the furnac, or any other extraneous body whatever penetrates the space between the fixed part of the furnace and the movable hearth, it will hinder the movement of this latter, rendering impossible the execution of the work. Besides this, the stream of cold air which, brought by the draft of the chimney, penetrates constantly to the interior of the furnace from the annular space which separates the fixed part form the movable hearth, and this makes still more difficult the work with this apparatus.

After a long study and divers attempts, I succeeded in devising a movable furnace which was easy and certain of operation, and enabled me to realize all the advantages of Pernot's, but free from its difficulties.

From figures 11a, 12a, and 13a, it will be clearly seen how, in that furnace, the movement of the entire chamber of fusion is effected, preventing, however, stoppages, influxes of cold air upon the bath, and the great cost of maintenance, which disadvantages connected with the Pernot furnaces prevent their being as largely employed as the advantages they present would lead one to suppose. It will also be seen that the axis of rotation of my furnace coincides with the axis of symmetry of the internal cavity, which includes a small angle with the vertical. This disposition of the axis of rotation renders the mixing of the bath very effective.

This favourable condition joined to the other, which is so easily verified in electric furnaces, viz., the high temperature which is established in the interior of the furnace, renders this new type much superior to that with more electrodes, especially when reductive fusion is to be carried on, on account of its extreme simplicity of operation, and on account of the sureness of action which characterizes it, and, in short, on account of the great economy of time and of heat, which its employment permits of.

As appears from the above-mentioned figures, the tube, in which the furnace terminates above, and which serves to give egress to the volatile products of the reactions which take place in the furnace, is furnished with a cup which surrounds it, but open on top. Into this cup fits another tube which, being fastened to the walls of the enclosure in which the furnace is placed, remains stationery even when the furnace rotates.

The cup of the tube which is fastened to the furnace being filled with sand, prevents volatile products from escaping from the junction of the fixed and movable tube, and serves to direct the volatile products for utilization, notwithstanding that the furnace in which they are generated is movable, and rotates about its own axis.

Two strong metal rings, fastened to the fixed tube above mentioned, which are clearly seen in figures 11a, 12a and 13a, electrically isolated, however, from the tube itself, serve to conduct the current, which is distributed to them by cables, to the electrode-holders by means of brushes, which run along the rings with the movement of the furnace.

With this arrangement of strong and simple apparatus, the current is as continuous when the furnace is in motion as when at rest.

After having enunciated the general theoretical considerations from which I set out to discover if the grave problem which was proposed to me was susceptible of a real and practical solution, and after having related the experiments performed to realize this, and described two types of furnaces—that with several pairs of electrodes and the one capable of rotation—the invention of which was based on the results of the experiments, and which represented the material solution of the problem, I shall complete the short exposition of the electro-thermal process which I am defending by going over again the data of facts and numbers which have been gathered from the numerous experiments performed, from which it will be possible to deduce with great ease the technical and economic value which the process itself possesses in many actual cases.

After the general theoretical study had been made, that which was to be determined by practical experiments consisted in establishing the form of the furnace, and of its accessories, best adapted to its purpose,

&c., maximum power of each furnace, the dimensions of the internal cavity in proportion to the amount of energy to be expended, in such a way that, while obtaining the temperature necessary for the complete success of the operations to be accomplished, it remained within such limits as to insure a reasonable duration of the internal lining of the furnaces. In addition to this should be determined the consumption of the electrodes which took place during the work. Besides this, it was also of the highest importance to determine if it was possible with the new furnace to obtain that continuity of work which those until now employed in metallurgy offered; if, always treating in the same way the same quality of mixture, it was possible to obtain the same type of product, and, finally, above all, if the consumption of energy was maintained within the limits fixed a priori.

As far as refers to the form of the furnace, and to the mode of working it, little remains for me to add to what I have above explained by giving an account of the successive transformations brought about in it before reaching the two final types above indicated. I shall confine myself then to noticing that, after the last modifications introduced, the apparatus, both from a mechanical and an electrical point of view, worked with extreme regularity and exactness, even when the work was prolonged for several days, as can be amply attested by many competent persons, who had an opportunity of being present at the experiments.

If, as I have already indicated, the determining of the form of the furnace and of its accessories was rather long and difficult, not less difficult was the determination of the dimensions best adapted to the internal cavity of it in relation to the quantity of energy which was to be used, and of the manner of making the refractory lining, which, for a long time undoubtedly, constituted the greatest difficulty which I had to overcome during all the long period of the experiments, and was the principal cause, and often the only one, of the partial lack of success which, in the period of experimentation, had to be met.

However, after accurate and patient effort, I have succeeded in establishing the proper relation between the potentiality of the furnace and its internal capacity, so that the last experiments, lasting for many consecutive days, have clearly demonstrated, with the evidence of facts, that it is possible to make arrangements in such a way as to assure a good conservation of the lining of the furnace, lasting for at least as long a time as that of an ordinary Martin-Siemens furnace.

In the course of these last experiments performed with the furnaces, I had also an opportunity of showing that during a regular and prolonged operation. the consumption of the electrodes was notably reduced on account of the complete absence of air in the interior of the furnace, of the system of cooling adopted all around them, of the method of connecting them with the metallic rods of the apparatus, &c., &c., so that with good carbons, 1.50 m. long, as they are now commonly made, one may succeed without any difficulty in using them for 60 or more consecutive hours, even when attaining high limits in the intensity of the current which flows through them.

The chemical and thermic detailed accounts of some operations performed, which are here reproduced in the following examples, offer a means at least of finding: how it would be possible always to attain the same type of product by treating in the same manner the same mixture; the degree of purity of the materials which are received from the treatment of the ore, and the consumption of energy necessary per unit of weight of iron produced.

To render the examination of the given tables more easy and clear, and to permit of a true estimate of the very important and exhaustive conclusions that are deduced from numerical data given in them, I think it will not be useless to state:—

1st.—That the experiments which are referred to were made on two different days, during the first of which (examples A, B and C), the quantity of energy used by the furnace in the course of the various operations was maintained constant, while in the other (examples D and E), regulating at our convenience the admission of water to the turbine, I made the current supplying the furnace vary approximately according to the needs of the moment.

2nd.—That the different chemical tables of the single operations were compiled in such a way as to make visible at a glance the quantity of materials charged, and of those which, in consequence of the reductions passed into the final product obtained.

3rd.—That the percentages shown in the column: "Coefficients of utilization or of elimination," represents respectively the degree of utilization of the metal of the ore obtained in each operation, and that of elimination obtained for all the other bodies different from iron, which constitute the impurities of the metal.

4th.—That the thermic detailed accounts were compiled in a manner similar to that in which I calculated them in the beginning of the present treatise.

5th.—That I have fixed at 500° the temperature at which the volatile products of the reactions, which take place in the furnace, escape from it; because during the experiment I had occasion to establish that they, escaping into the atmospheric air, could spontaneously take fire only with great difficulty, which demonstrates clearly that normally they escape at a temperature somewhat lower than that of ignition, which will be from 500°to 550°.

EXAMPLE A.

PROCESS OF REDUCTION OF THE ORE.

A charge of 61.100 kgs. of mixture composed of....

Iron Ore	1000
Lime	125
Carbon	160
Tar	120

QUALITY AND QUANTITY OF THE MATERIALS.

ANALYSES

Of the Ore	Fe_2O_3	93.020 %
	MnO	0.619 "
	SiO_2	3.790 "
	CaO, MgO.	0.500 "
	S	0.058 "
	P	0.056 "
	Moisture	1.720 "
Of the Lime	CaO	51.210 %
	MgO	3.110 "
	SiO_2	0.900 "
	Al_2O_3 Fe_2O_3	0.500 "
	CO_2	43.430 "
Of the Carbon	C	90.420 %
	Ash	3.880 "
	Moisture	5.700 "
Of the Tar	C fixed	59.200 %
	Hydrocarbons	40.500 "
	Ash	0.270 "
Of the Iron Produced	Fe	99.647 %
	Mn	0.106 "
	Si	0.048 "
	S	0.073 "
	P	0.0055 "
	C	0.120 "

Substances	Charged gr.	Obtained gr.	Coefficients of utilization and of elimination %
Fe	28,297.860	25,908.220	91.55
Mn	208.085	27.560	86.76
Si	791.463	12.480	98.42
S	25.222	19.500	22.39
P	24.353	1.430	94.13

THERMIC

The quantity and the composition of the materials charged in the furnace in this operation :

40.464	kgs.	of Fe_2O_3	with ore
0.269	"	of MnO	
1.639	"	of SiO_2	
0.217	"	of CaO, MgO	
0.748	"	of H_2O	
2.784	"	of CaO	with lime
0.169	"	of MgO	
0.049	"	of SiO_2	
0.026	"	of Al_2O_3, Fe_2O_3 ...	
2.362	"	of CO_2	
6.293	"	of C	with carbon
0.270	"	of Ash	
0.396	"	of H_2O	
3.090	"	of C	with tar
0.014	"	of Ash	
2.116	"	of Hydrocarbons ...	

CHEMICAL AND THERMIC SCHEDULE.

Product obtained 26.000 kgs. of soft iron.

PROGRESS OF THE OPERATION.

At 12.52′ the charging began and the current was turned on.......100 volts 1000 amperes
" 13.40′ the charging was finished.............................. ....100 " 1000 "
" 14.18′ the metal melted.............................. ....100 " 1000 "

The total then of the energy furnished was 100 × 1000 × 86.......8,600,000 volt-ampere-minutes, which with cos. $\varphi = 0.8$ is equivalent

$$\text{to } \frac{8{,}600{,}000 \times 0.8}{60} = 114{,}666 \text{ watt-hours} = \frac{114{,}666}{735} = 156 \text{ H.P. hours.}$$

SCHEDULE.

To reduce the Fe contained in the final product there are required $\frac{25{,}908.220}{112} \times 192.2$..................................	44,458.128 calories
To reduce the Mn contained in the final product there are required $\frac{27.56}{55} \times 94.6$.......	47.880 "
To reduce the Si contained in the final product there are required $\frac{12.48}{28} \times 219.2$..................................	93.936 "
To melt the metal there are required 26 × 350.....................	9,100.000 "
To melt the slag there are required 5.300 × 600................. ...	3,180.000 "
To evaporate the H_2O and bring it to vapor at 100° there are required 1.144 × 637........................	728.720 "
To raise to 500° the vapor of 100° there are required 1.144 × 400 × 0.48	219.648 "
To calcine the lime there are required 5.437 × 425................	2,310.725 "
To heat to 500° the CO_2 there are required $\frac{2.362}{0.044} \times 500 \times 0.016$....	424.000 "
" " " 500° the hydrocarbons there are required 2.116 × 500 × 0.27	318.860 "
" " " 500° the CO produced by the reduction of the Fe, Mn and Si there are required $(3 \times \frac{25{,}908{,}220}{112} + \frac{27.56}{55} + 2 \times \frac{12.48}{28}) \times 500 \times 0.0068$...	2,273.111 "
Total..................................	63,155.008 "
Deducting from these the calories developed during the reductions by the combustion to CO of the C charged 8.023 × 2175....	17,450.000 "
There remain...........................	45,705.008 "

So the heat furnished being 156 × 635.3=100,106.8 calories, the thermic return

$$\text{was } \frac{45{,}705 \times 100}{100{,}106.8} = 45.65\%$$

EXAMPLE B.

PROCESS OF REDUCTION OF THE ORE.

A charge of 49.500 kgs. of mixture composed of.....

Iron Ore	1000
Lime	125
Carbon	160
Tar	120

QUALITY AND QUANTITY OF THE MATERIALS.

	Analyses	
Of the Ore	Fe_2O_3	93.020 %
	MnO	0.619 "
	SiO_2	3.790 "
	CaO, MgO	0.500 "
	S	0.058 "
	P	0.056 "
	Moisture	1.720 "
Of the Lime	CaO	51.210 %
	MgO	3.110 "
	SiO_2	0.900 "
	Al_2O_3, Fe_2O_3	0.500 "
	CO_2	43.430 "
Of the Carbon	C	90.420 %
	Ash	3.880 "
	Moisture	5.700 "
Of the Tar	C fixed	59.200 %
	Hydrocarbons	40.500 "
	Ash	0.270 "
Of the Iron Produced	Fe	99.704 %
	Mn	0.095 "
	Si	0.022 "
	S	0.062 "
	P	0.024 "
	C	0.092 "

Sub-stances	Charged gr.	Obtained gr.	Coefficients of utilization and of elimination %
Fe	22,925.516	21,942.080	91.33
Mn	168.580	20.013	88.18
Si	641.204	4.599	99.29
S	20.434	13.020	36.29
P	19.729	5.187	73.71

THERMIC

The quantity and the composition of the materials charged in the furnace in this operation:

32.772 kgs.	of Fe_2O_3	with ore
0.218 "	of MnO	
1.335 "	of SiO_2	
0.176 "	of CaO, MgO	
0.020 "	of S	
0.020 "	of P	
0.606 "	of H_2O	
0.250 "	of CaO	with lime
0.136 "	of MgO	
0.039 "	of SiO_2	
0.022 "	$Al_2O_3Fe_2O_3$	
1.910 "	of CO_2	
5.096 "	of C	with carbon
0.219 "	of Ash	
0.321 "	of H_2O	
2.603 "	of C	with tar
1.712 "	of Hydrocarbons	
0.011 "	of Ash	

CHEMICAL AND THERMIC SCHEDULE.

Product obtained 22.00 kgs. of soft iron.

PROGRESS OF THE OPERATION.

At 14.24′ the charging began and the current was turned on.......100 volts 1000 amperes
" 14.47′ the charging was finished ....100 " 1000 "
" 15.50′ the metal melted........................ ....100 " 1000 "
The total then of the energy furnished was 100 × 1000 × 86.......8,600,000 volt-ampere-minutes, which with cos. $\varphi = 0.8$ is equivalent

$$\text{to } \frac{8{,}600{,}000 \times 0.8}{60} = 114{,}666 \text{ watt-hours} = \frac{114{,}666}{735} = 156 \text{ H.P. hours.}$$

SCHEDULE.

To reduce the Fe contained in the final product there are required $\frac{21{,}942.080}{112} \times 192.2$.....................	37,653.902 calories
To reduce the Mn contained in the final product there are required $\frac{20.013}{55} \times 94.6$.....................	34.424 "
To reduce the Si contained in the final product there are required $\frac{4.599}{28} \times 219.2$.....................	35.949 "
To melt the metal there are required 22.000 × 350.....................	7,700.000 "
To melt the slag there are required 4.350 × 600.....................	2,610.000 "
To evaporate the H_2O and bring it to vapor at 100° there are required 0.927 × 637.....................	590.499 "
To raise to 500° the vapor of 100° there are required 0.927 × 400 × 0.48	177.984 "
To calcine the lime there are required 4.400 × 475.....................	2,090.000 "
To heat to 500° the CO_2 there are required $\frac{1.910}{0{,}044} \times 500 \times 0.016$...	347.200 "
To heat to 500° the hydrocarbons there are required 1.712 × 500 × 0.27	231.120 "
To heat to 500° the C O produced by the reduction of the Fe, Mn and Si there are required $(3 \times \frac{21{,}942.080}{112} + \frac{20.013}{55} + 2 \times \frac{4.350}{28}) \times 500 \times 0.0068$.	2,000.365 "
Total	53,471.713 "
Deducting from these the calories developed during the reductions by the combustion to C O of the C charged 7.061 × 2175...	15,357.675 "
There remain.....................	38,114.038 "

So the heat furnished being 156 × 635.3=100,106.8 calories, the thermic return

$$\text{was } \frac{38{,}114.038 \times 100}{100{,}106.8} = 37.07\%$$

EXAMPLE C.

PROCESS OF REDUCTION OF THE ORE.

A charge of 57 kgs. of mixture composed of ....

Iron Ore	1000
Lime	125
Carbon	160
Tar	125

QUALITY AND QUANTITY OF THE MATERIALS.

ANALYSES

Of the Ore	Fe_2O_3	93.020 %
	Mn O	0.619 "
	Si O_2	3.792 "
	Ca O, Mg O	0.500 "
	S	0.058 "
	P	0.056 "
	Moisture	1.720 "
Of the Lime	Ca O	51.210 %
	Mg O	3.110 "
	SiO_2	0.900 "
	Al_2O_3, Fe_2O_3	0.500 "
	CO_2	43.430 "
Of the Carbon	C	90.420 %
	Ash	3.880 "
	Moisture	5.700 "
Of the Tar	C	59.200 %
	Hydrocarbons	40.500 "
	Ash	0.270 "
Of the Iron Produced	Fe	99.690 %
	Mn	0.109 "
	Si	0.028 "
	S	0.046 "
	P	0.013 "
	C	0.113 "

Substances	Charged gr.	Obtained gr.	Coefficients of utilization and of elimination %
Fe	24,028.800	21,931.800	91.27
Mn	191.400	23.980	87.55
Si	730.240	6.160	99.16
S	23.200	10.120	56.38
P	22.400	2.860	87.24

THERMIC

The quantity and the composition of the materials charged in the furnace in this operation :

37.737 kgs.	of Fe_2O_3	with ore
0.251 "	ot Mn O	
1.538 "	of Si O_2	
0.203 "	of Ca O, Mg O	
0.698 "	of H_2O	
2.597 "	of Ca O	with lime
0.158 "	of Mg O	
0.025 "	of Al_2O_3, Fe_2O_3	
2.202 "	of C O_2	
5.869 "	of C	with carbon
0.252 "	of Ash	
0.370 "	of H_2O	
2.882 "	of C	with tar
1.972 "	of Hydrocarbons	
0.013 "	of Ash	

CHEMICAL AND THERMIC SCHEDULE.

Product obtained 22.000 kgs of soft iron.

PROGRESS OF THE OPERATION.

At 15.15′ the charging began and the current was turned on.......100 volts 1000 ampères
" 16.30′ the charging was finished.............................100 " 1000 "
" 17.17′ the metal melted......................................100 " 1000 "

The total then of the energy furnished was 100 × 1000 × 82 = 8,200,000 volt-ampère-minutes, which with cos. $\varphi = 0.8$ is equivalent

$$\text{to } \frac{8,200,000 \times 0.8}{60} = 109,333 \text{ Watt-hours} = \frac{109,333}{735} = 148.7 \text{ H.P. hours.}$$

SCHEDULE.

To reduce the Fe contained in the final product there are required $\frac{21,931.8}{112} \times 192.2$	37,672.250	calories
To reduce the Mn contained in the final product there are required $\frac{23.980}{55} \times 94.6$	41.246	"
To reduce the Si contained in the final product there are required $\frac{6.160}{28} \times 219.2$	50.424	"
To melt the metal there are required 22.000 × 350	7,700.000	"
To melt the slag there are required 5.037 × 600	3,022.200	"
To evaporate the H_2O and bring it to vapor at 100° there are required 1.068 × 637	680.316	"
To raise to 500° the vapor of 100° there are required 1.068 × 400 × 0.48	205.056	"
To calcine the lime there are required 5.071 × 475	2,155.175	"
To heat to 500° the CO_2 there are required $\frac{2.202}{0.044} \times 500 \times 0.016$	400.000	"
To heat to 500° the hydrocarbons there are required 1.972 × 500 × 0.27	266.220	"
To heat to 500° the CO produced by the reduction of the Fe, Mn and Si there are required $(3 \times \frac{21,931.8}{112} + \frac{23,980}{55} + 2 \times \frac{6.160}{28}) \times 500 \times 0.0068$	2,000.138	"
Total	54,193.025	"
Deducting from these the calories developed during the reductions by the combustion to CO of the C charged 7.059 × 2175	15,353.325	"
There remain	38,839.700	"

So the heat furnished being 148.7 × 635.3=94,469.110 calories, the thermic return

$$\text{was } \frac{38,839.700 \times 100}{94,469.110} = 41.11\ \%$$

EXAMPLE D. PROCESS OF REDUCTION OF THE ORE.

A charge of 56.200 kgs. of mixture composed of.......

Iron Ore	1000
Lime ....,.... ..	125
Carbon	160
Tar	120

QUALITY AND QUANTITY OF THE MATERIALS.

ANALYSES		
Of the Ore	Fe_2O_3	93.020 %
	Mn O	0.619 "
	Si O_2	3.790 "
	Ca O,Mg O.	0.500 "
	S................	0.058 "
	P	0.056 "
	Moisture....	1.720 "
Of the Lime	CaO....	51.210 %
	Mg O............	3.110 "
	Si O_2	0.900 "
	Al_2O_3 Fe_2O_3	0.500 "
	CO_2	43.430 "
Of the Carbon	C................	90.420 %
	Ash	3.880 "
	Moisture..........	5.700 "
Of the Tar	C................	59.200 %
	Hydrocarbons.....	40.500 "
	Ash	0.270 "
Of the Iron Produced	Fe...............	99.742 %
	Mn	0.083 "
	Si	trace
	S................	0.065 "
	Ph	0.0016 "
	C	0.091 "

Substances	Charged gr.	Obtained gr.	Coefficients of utilization and of elimination %
Fe	26,045.600	24,736.016	94.91
Mn	192.115	20.584	89.29
Si	708.680	trace	99.60
S	23 200	16.120	30.52
P	22.400	0.397	98.23

THERMIC

The quantity and the composition of the materials charged in the furnace in this operation :

37.208 kgs.	of Fe_2O_3	with ore
0.248 "	of Mn O...........	
1.519 "	of Si O_2	
0.020 "	of Ca O, Mg O ...	
0.688 "	of H_2O...........	
2.511 "	of Ca O....	with lime
0.155 "	of Mg O...........	
0.045 "	of Si O_2	
0 025 "	of Al_2O_3, Fe_2O_3 . ..	
2.172 "	of CO_2	
5.687 "	of C...............	with carbon
0.284 "	of Ash............	
0.365 "	of H_2O...........	
2.842 "	of C..............	with tar
1.944 "	of Hydrocarbons...	
0.013 "	of Ash	

CHEMICAL AND THERMIC SCHEDULE.

Product obtained 24.800 kgs of soft iron.

PROGRESS OF THE OPERATION.

At 18.30′ the charging was begun and the current was turned on; 19.15′ the charging was completed; 20′ the metal melted. The current was regulated in such a way that for the first 30 minutes it was 100 volts and 1000 amperes, after which it was for 30 minutes 80 volts and 800 amperes, then for 20 minutes 70 volts and 600 amperes and at last for 10 minutes 100 volts and 1000 amperes. The total then of energy furnished was 6,760,000 volt-ampere-minutes which with cos. $\varphi = 0.8$ is equal to $\frac{6,760,000 \times 0.8}{60}$ $= 90,133$ watt-hours $= \frac{90,133}{735} = 122.7$ H.P. hours.

SCHEDULE.

To reduce the Fe contained in the final product there are required $\frac{24.736.016}{112} \times 192.2$	42,448.715	calories
To reduce the Mn contained in the final product there are required $\frac{20.584}{55} \times 94.6$	35.380	"
To reduce the Si contained in the final product	——	
To melt the metal there are required 24.800 × 350	8,680.000	"
To melt the slag there are required 4.750 × 600	2,850.000	"
To evaporate the H_2O and bring it to vapor at 100° there are required 1,053 × 637	670.761	"
To raise to 500° the vapor of 100° there are required 1,053 × 400 × 0.48	202.176	"
To calcine the lime there are required 5.000 × 475	2,375.000	"
To heat to 500° the CO_2 there are required $\frac{2.172}{0.044} \times 500 \times 0.016$	394.880	"
" " " 500° the hydrocarbons there are required 1,944 × 500 × 0.27	262.440	"
" " " 500° the CO produced by the reduction of the Fe and Mn there are required $(3 \times \frac{24,736.016}{112} + \frac{20.584}{55}) \times 500 \times 0.0068$	2,254.012	"
Total	60,173.364	"
Deducting from these the calories developed during the reductions by the combustion into CO of the C charged 7,950 × 2175	17,291.250	"
There remain	42,882.114	"

So the heat furnished being 122.7 × 635.3 = 77,951,31 calories, the thermic return was $\frac{42,882.114 \times 100}{77,951.31} = 55.02\%$

Example E.

PROCESS OF REDUCTION OF THE ORE

A charge of 70.250 kgs. of mixture composed of.......		
	Iron Ore................	1000
	Lime	125
	Carbon	160
	Tar.....................	120

Quality and Quantity of the Materials.						Coefficients of utilization and of elimination.
Analyses			Substances	Charged gr.	Obtained gr.	%
Of the Ore	Fe_2O_3	93.020 %	Fe	32,557.280	30,727.312	94.38
	Mn O	0.619 "	Mn	329.745	28.336	88.19
	Si O_2	2.790 "	Si	910.448	trace	99.60
	CaO, MgO	0.500 "	S	29.000	15.172	47.86
	S	0.058 "	P	28.000	2.772	90.10
	P	0.056 "				
	Moisture	1.720 "				
Of the Lime	CaO	51.210 %				
	MgO	3.110 "				
	SiO_2	0.900 "				
	Al_2O_3, Fe_2O_3	0.500 "				
	CO_2	43.430 "				
Of the Carbon	C	90.420 %				
	Ash	3.880 "				
	Moisture	5.700 "				
Of the Tar	C	59.200 %				
	Hydrocarbons	40.500 "				
	Ash	0.270 "				
Of the Iron Produced	Fe	99.764 %				
	Mn	0.092 "				
	Si	trace "				
	S	0.059 "				
	P	0.009 "				
	C	0.090 "				

THERMIC

The quantity and the composition of the materials charged in the furnace in this operation:

46.510 kgs.	of Fe_2O_3..........	with ore
0.309 "	of Mn O..........	
1.895 "	of Si O_2..........	
0.250 "	of CaO, Mg O.....	
0.860 "	of H_2 O..........	
3.263 "	of Ca O..........	with lime
0.194 "	of MgO..........	
0.056 "	of Si O_2..........	
0.031 "	of Al_2O_3, Fe_2O_3...	
2.714 "	of C O_2..........	
7.234 "	of C..............	with carbon
0.310 "	of Ash............	
0.456 "	of H_2O..........	
3.552 "	of C..............	with tar
2.430 "	of Hydrocarbons...	
0.016 "	of Ash............	

CHEMICAL AND THERMIC SCHEDULE.

Product obtained 30.800 kgs. of soft iron.

PROGRESS OF THE OPERATION.

At 20.15′ the charging began and the current was turned on; at 21.15′ the charge was completed; at 22.15′ the metal was melted. The current was regulated in such a way that in 20 minutes the current passing was 800 amperes at 80 volts, the next 20, 100 volts and 1,000 amperes, then for 30′ it dropped to 70 volts and 600 amperes, afterwards for another 30′ it was reduced to 50 volts and 500 amperes, finally for the last 20′ it rose to 100 volts and 1,000 amperes. In all the energy furnished was 7,290,000 volt-ampere-minutes, which with cos. $\varphi = 0.8$ equals

$$\frac{7,290,000 \times 08}{60} = 97,200 \text{ Watt hours} = \frac{97.200}{735} = 132\ 24 \text{ H.P. hours.}$$

SCHEDULE.

To reduce the Fe contained in the final product there are required $\frac{30,727.312}{112} \times 192.2$	52,730.262	calories
To reduce the Mn contained in the final product there are required $\frac{28,336}{55} \times 94.6$	48.719	“
To reduce the Si contained in the final product	—	“
To melt the slag there are required 30.800×350	10,780.000	“
To evaporate the H_2O and bring it to vapor at 100° there are required $1,316 \times 637$	838.292	“
To raise to 500° the vapor of 100° there are required $1,316 \times 400 \times 0.48$	252.672	“
To calcine the lime there are required 6.250×475	2,968.750	“
To heat to 500° the CO_2 there are required $\frac{2.714}{0.044} \times 500 \times 0.016$	493.454	“
“ “ “ 500° the hydrocarbons there are required $2.430 \times 500 \times 0.27$	328.050	“
“ “ “ 500° the CO produced by the reduction of the Fe and Mn there are required $(3 \times \frac{30,727.312}{112} + \frac{28.336}{55}) \times 500 \times 0.0068$	2,800.131	“
Total	75,020.330	“
Deducting from these the calories developed during the reductions by the combustion into CO of the C charged $9.883 \times 2,175$	21,495.525	“
There remain	53,524.805	“

So the heat furnished being $132.24 \times 635.3 = 84,012.072$ calories, the thermic return was $\frac{53,524.805 \times 100}{84,012.072} = 61.33\%$

F.

SUMMARY OF THE CHEMICAL AND THERMIC SCHEDULES.

	1st Test		2nd Test		3rd Test		4th Test		5th Test	
	Composition in percentage	Coefficients of utilization or of elimination	Composition in percentage	Coefficients of utilization or of elimination	Composition in percentage	Coefficients of utilization or of elimination	Composition in percentage	Coefficients of utilization or of elimination	Composition in percentage	Coefficients of utilization or of elimination
Iron	99.647	91.55	99.704	91.31	99.690	91.27	99.742	94.91	29.764	94.38
Manganese	0.106	86.76	0.095	88.13	0.109	87.55	0.083	89.29	0.092	88.19
Silica	0.048	98.42	0.022	99.29	0.028	99.16	trace	99.60	trace	99.60
Sulphur	0.073	22.39	0.062	36.29	0.046	56.38	0.065	30.52	0.059	47.86
Phosphorus	0.0055	94.13	0.024	73.71	0.013	87.24	0.0016	98.23	0.009	90.10
Carbon	0.120	....	0.092	....	0.113	....	0.091	....	0.090	....
Electric Horse Power per Kg. of iron	6.00		7.00		6.76		4.94		4.22	
Thermic return %	45.65		37.07		41.11		55.02		61.33	

From a comparative examination of the numerical data of the preceding tables A, B, C, D and E, which are summed up in schedule F, it clearly appears:—

1st.—That operating upon the same mixture, one is sure of constantly obtaining the same type of product, a thing which is easily understood when it is considered that the operations take place in a closed chamber, and that in no other furnace is it possible to have always the same conditions, a thing which is obtained in the electric furnace in which it is possible to value exactly the quantity of heat developed by measuring the current which is transmitted to it, and regulating it so that it is always maintained within the desired limits.

2nd.—That the shrinkage of the metal contained in the ore is restricted with this process to the narrowest limits, and is notably inferior to that which takes place in the blast furnace.

3rd.—That with a single operation it is possible to obtain products of great purity, eliminating thus (besides the expense of labor or fuel inseparable from the operation of refining pig) the loss through shrinkage which takes place during this operation, a loss which varies from 8% to 10%, and rises sometimes as high as 20%.

4th.—That through the special method in which the reactions take place with this process, it is possible to obtain iron very soft, containing very small quantities of manganese, a thing which is of capital importance for some special applications, as, for example, the making of the frames of dynamos out of soft iron.*

5th.—Finally, that it was possible to reduce somewhat the intensity of the current communicated to the furnace during the period of digestion of the bath in the last experiments (see schedules D and E), bringing down to only 4.22 horse-powers per kg. of product the consumption of energy, which, in the first experiment, had varied from 6 to 7 horse-powers.

From this, therefore, it follows logically that with furnaces having several pairs of electrodes, and in particular with those of the rotating type, in which, for the reasons above set forth at length, it is possible and easy to conduct operations with a maximum economy of heat, there will undoubtedly be obtained the high thermic return of 80%, and even 85%,

---

*NOTE.—I do not think it useless to quote in this regard comparative data obtained by the distinguished Doctor Giorgio Finzi, in a series of experiments made by him to determine the hysteresis loss of iron of different countries, data which completely confirm such a conclusion. The following are the numerical coefficients found by him:

German metallic plates of 0.4 mm Type B...........	0.00162
" " " " " C..........	0.00174
" " " " " D...........	0.00200
" " " " " E...........	0.00310
Swedish iron (Prof. Goldschmidt)...	0.00142
Italian " (Capt. Stassano).....	0.00135

See the magazine "Electricity" for 1901, number 23.

which, in fact, in numerous experiments, was shown to have been obtained, in furnaces with a single pair of electrodes, in the case of reductive fusion, and simple fusion (whether of pig, iron or steel).

Now, as far as I have been permitted, by the narrow limits assigned to this short monograph, I have given an idea of the expense of production, as well as of reducing iron ore by means of this process.

And while from this exposition there can clearly be seen the economical advantage which such a process promises wherever (as in our country) the lack of suitable coal renders the great iron-smelting industry impossible, I shall add to this calculation that of the expense of obtaining the said products with ordinary processes in countries where combustible minerals abound.

Although the electro-thermic process which I am supporting may resemble, in the way in which it proceeds, and in the similarity of the furnace which it employs, the Martin-Siemens, yet I call attention to the fact that in respect of the cost of production of a unit of weight of final malleable product with the ordinary metallurgic process, the refining of the pig is effected with the Bessemer system, using the molten metal just drawn from the blast furnace, and on the hypothesis that the necessary motor force to operate the converters is produced with the gas from the blast furnace.

I select therefore as a model that one of the ordinary processes of making malleable iron which involves the minimum consumption of fuel

Now, Ledebur, as well as Helson, Gruner, Bell, Knab, &c., are agreed in establishing that, on the average, with coke at the price at which it can be obtained in England, Belgium, Germany, or North America, consequently in localities, rich in coal, the cost of production of a ton of pig, exclusive of the value of ore, varies from 29.00 lire to 48.00 lire, that is:—

For fuel	from	16.00 lire	to	28.00 lire
For lime........................	"	3.00	"	5.00 "
For cost of labor and general expenses	"	10.00	"	15.00 "
Total.............	from	29.00 lire	to	48.00 lire

Taking, however, a value somewhat lower than the average of this figure, I fix at 35 lire such expense. Moreover, I suppose that for the production of the pig there is employed a very rich ore, such as that of the Island of Elba—which I have taken as a base for the theoretical calculations above set forth, and which I have used in experiments with electric furnaces, of which I have given the chemical and thermal detailed accounts—ore which costs in the neighborhood of 15 lire a ton at the blast furnace. Allowing, however, that the shrinkage of the metal of the ore in the blast furnace is restricted to 10% for each ton of pig, there is needed about 1,700 kgs. of ore; the cost, therefore, of the pig, will amount to 60.50 lire a ton, that is:—

	lire.
For ore, 1,700 kgs., at 15 lire per 1,000 kgs.	25.50
For fuel, cost of labor, &c.	35.00
Total	60.50

According to these authorities, the net expense for the refining of a ton of product in ingots, with the Bessemer process, exclusive of the fuel for re-melting the pig, and without calculating the cost of the pig, or the shrinkage to which it is subjected during the operation, which, on the average, can be valued at 15%, is 26.50 lire, that is:—

	lire.
For ferro-manganese, at 200 lire per ton	12.00
For cost of labor	5.00
For refractory material	1.50
For maintaining and repairing the works	2.50
For maintaining the moulds and diverse accessories	3.00
For expense of overseeing and general expense	2.50
Total	26.50

Therefore, on examination, a ton of malleable product in ingots is seen to cost 96 lire, divided in this way:—

	lire.
For pig 1,150 kgs. at 60.50 lire per 1,000 kgs.	69.57
For expense of refining	26.50
Total	96.07

in round numbers, 96 lire.

It appears from this calculation, that in countries rich in coal, the cost of a ton of malleable product in ingots, even operating with *the most economical and perfect methods,* does not fall below 96 lire.

Let us examine now the cost of production in case the reduction of ore were effected with the electro-thermic process devised by me. I suppose in this calculation:—

1st.—That the ore employed is similar to that from the Island of Elba, adopted in the experiments of which I have above given the results.

2nd.—That for the preparation of the mixture there is employed metallurgic coke, at the price of 45 lire a ton.

3rd.—That the works in which is effected the reduction of the ore be provided with the necessary apparatus to collect and to utilize for the successive processes the CO which is generated in the furnace during the operation.

4th.—That the electrodes necessary to the operation of the furnace are produced in the works themselves, at the price of 0.30 lire per kg., in place of 0.45lire, which is at present their commercial value.

5th.—That the works be provided with an hydraulic electric plant of not less than 5,000 effective electric horse-power, and that accordingly it may have a capacity of 30 tons of iron in 24 hours.

6th.—That each rotating furnace installed requires 1,000 effective electric horse-powers, and produces accordingly 6 tons of ingots a day.

7th.—That the hydraulic electric plant costs in the neighbourhood of 300 lire for each electric horse-power installed.

Taking, then, for granted, and using for the present the actual data derived from the numerous experiments performed, whether with the furnace or in the preparation of the mixture, it can be established that the cost of one ton of iron in ingots under the new process is about 94.40 lire, that is:—

	lire
For 1,600 Kgs.* of ore........at 15 lire per 1,000 kgs.	24.00
" the pulverizing of the same at 3 " "	4.80
" 200 Kgs. of lime..........at 5 " "	1.00
" 250 Kgs. of Coke.........at 45 " "	11.25
" the pulverizing of this.....at 2 " "	0.50
" 190 Kgs. of tar..........at 70 " "	13.30
" the making of the conglomerate mass at 3 lire per 1,000 Kgs. of the mixture..................	6.75
" the consumption of the electrodes (12 Kgs. at 0.30 lire per Kg.)........................	3.60
" the maintaining of the furnace.................	12.00
" cost of labor..................................	6.00
" maintenance of moulds and different apparatuses...	3.00
" motor force 4,000 H. P. hours at 0.0057 lire per hour	22.80
" general expenses and overseeing................	3.00
Total..................	112.00
Deducting from this the value of the oxide of carbon and of the volatile hydro-carbon of the tar returned; that is about 900 cubic meters of combustible gas which at only 2 cts. per cubic meters makes†....	18.00
Remaining as the actual expense................	94.00

---

* It is worth while noting that in the experiments made, there was always a shrinkage of ore less than that which was found in the blast furnace.

† From what has been said before, the value of the gas that can be utilized should be 24.55 lire, viz.—the sum of the cost of the carbon and of the tar used in making the mixture, because such materials during the work of the furnace are simply transformed from solid combustibles into gaseous ones. Fixing, therefore, the value at only 18 lire is more than is warranted.

The eloquence of this figure, the result of conscientious analyses based upon actual data resulting from long and minute experiments, relieves me from making further comment. I shall allow myself only to observe that, even in case, through exceptional circumstances not often met with, the motor force should cost more than 300 lire per electric horse-power, the advantages of the process would not be greatly diminished. Indeed, even placing the cost of installing per horse-power at 500 lire, a greatly exaggerated figure when dealing with great hydraulic electric plants, the cost of production of a ton of iron would not be increased by more than 11.48 lire, an increase largely compensated for by the expense of transport, which raises the price of the metal produced in a foreign country at only 96 lire a ton before it reaches Italy.

Plate I.

ELECTRO-THERMIC PROCESS FOR THE REDUCTION OF IRON ORE

Primitive electric furnace adopted in experiments at Rome

Fig. 1a

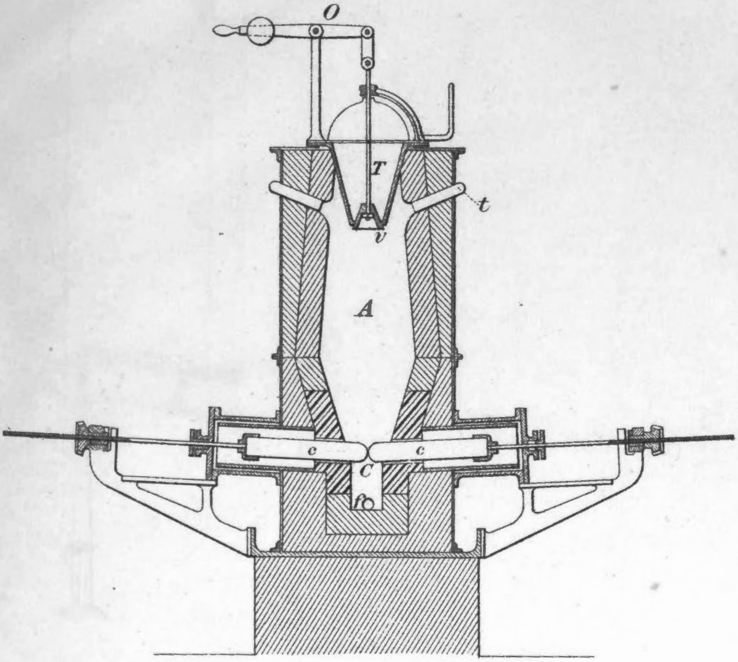

Fig. 2a

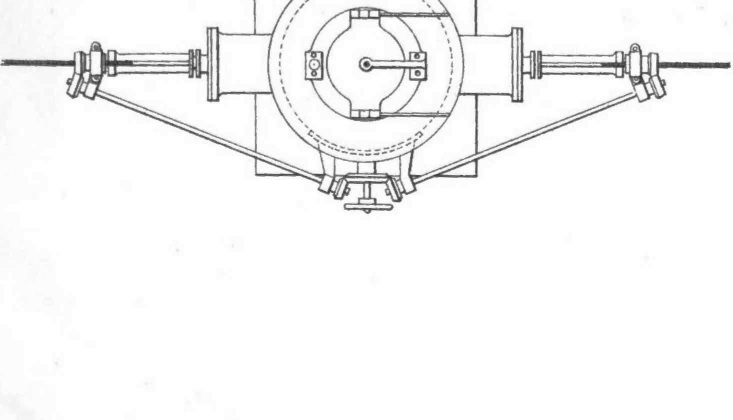

Plate II.

ELECTRO-THERMIC PROCESS FOR THE REDUCTION OF IRON ORE

Modified 500 HP electric furnace constructed at Darfo

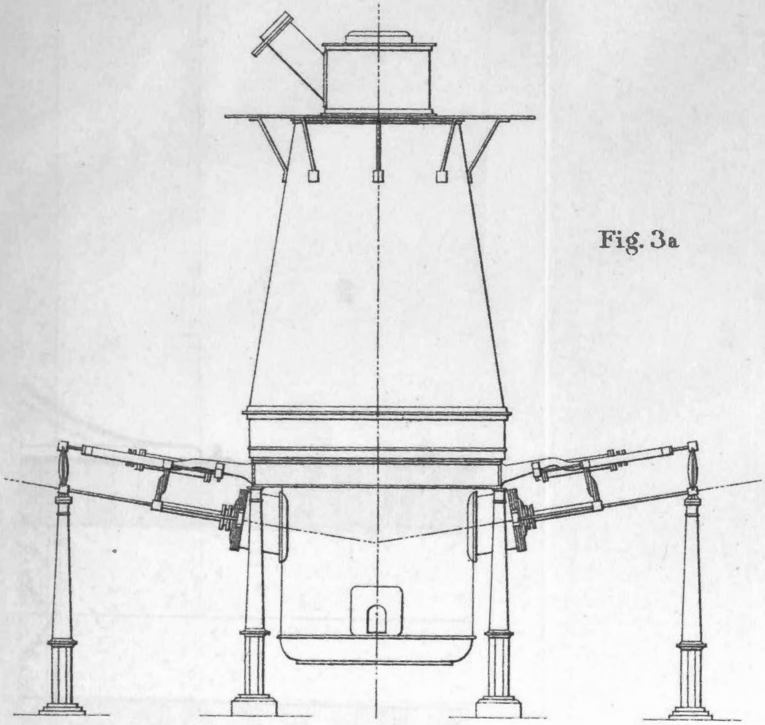

Fig. 3a

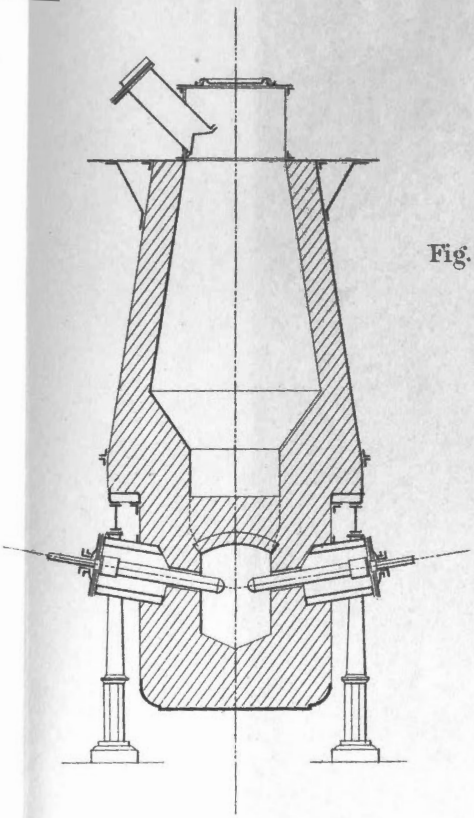

Fig. 5a

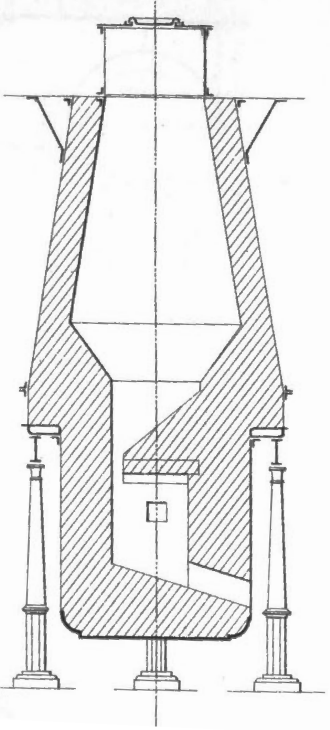

Fig. 4a

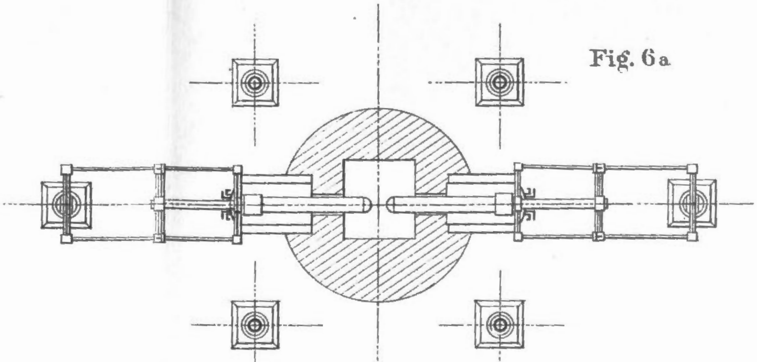

Fig. 6a

PROCESS FOR THE REDUCTION OF IRON O

Rotating electric furnace

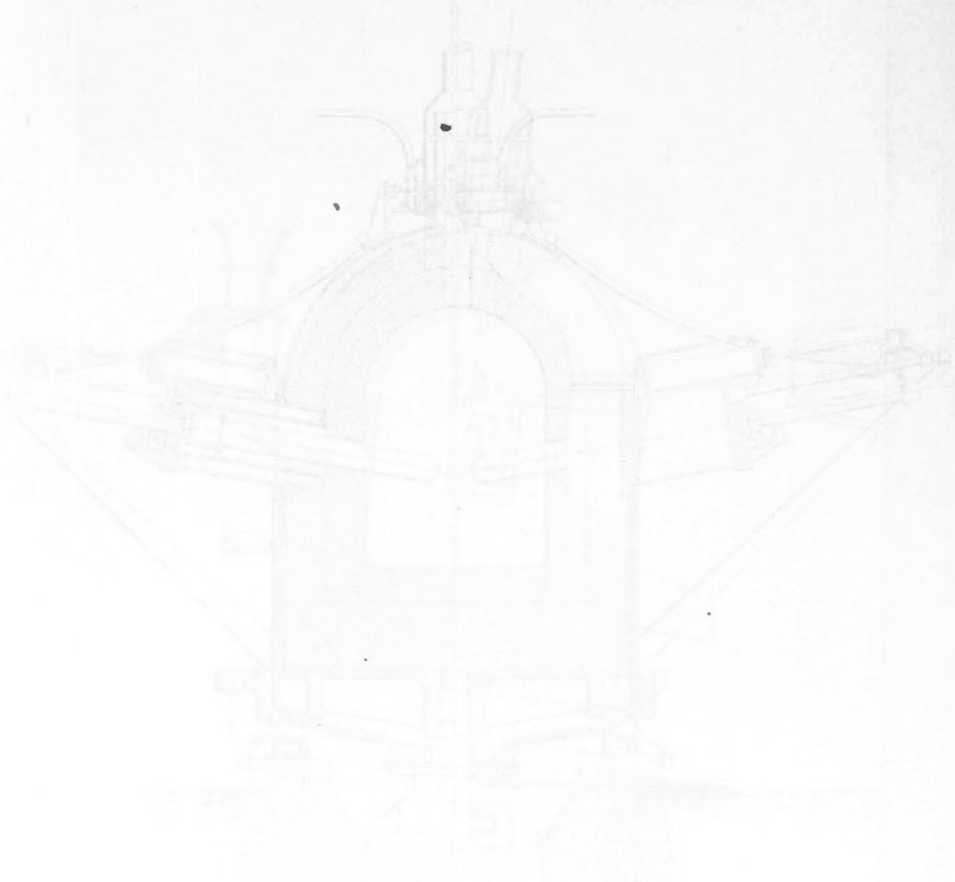

Plate III.

ELECTRO-THERMIC PROCESS FOR THE REDUCTION OF IRON ORE

Electric furnace with one hearth and 3 pairs of electrodes

Section AB

Fig. 7a

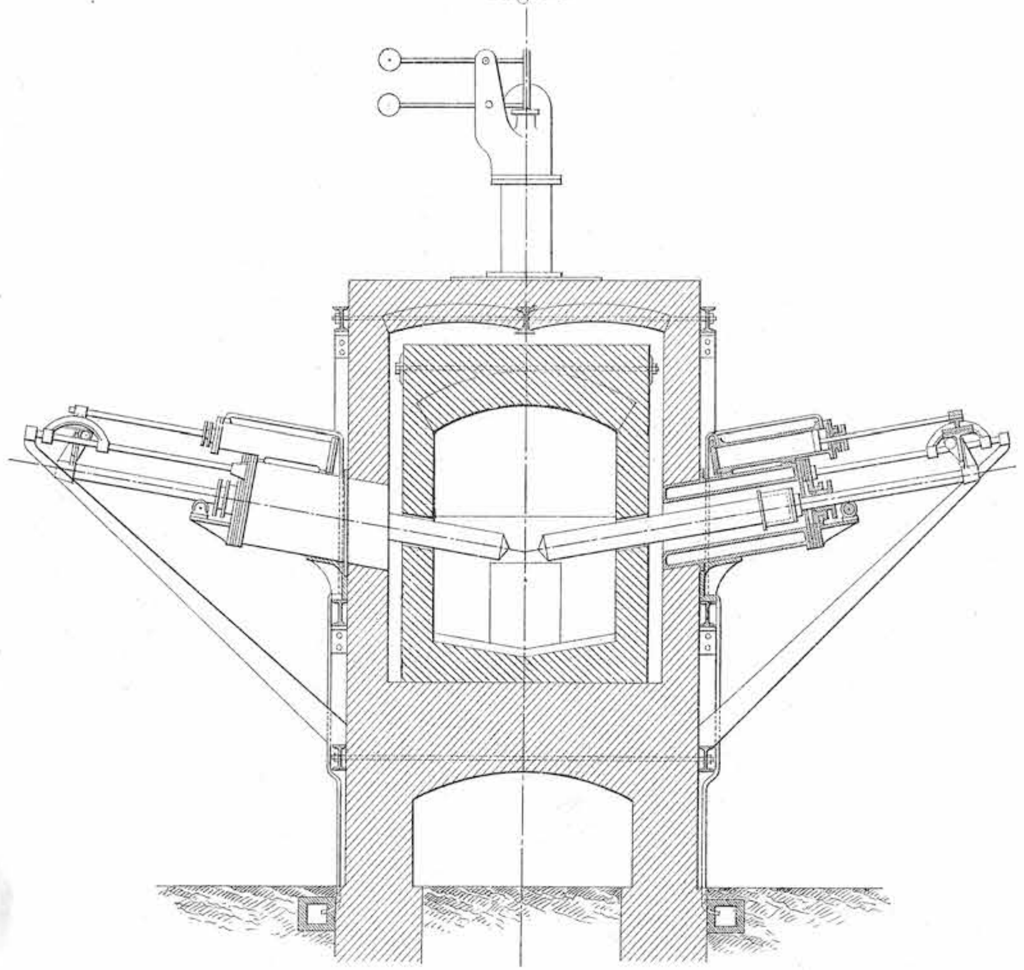

Top view

Fig. 8a

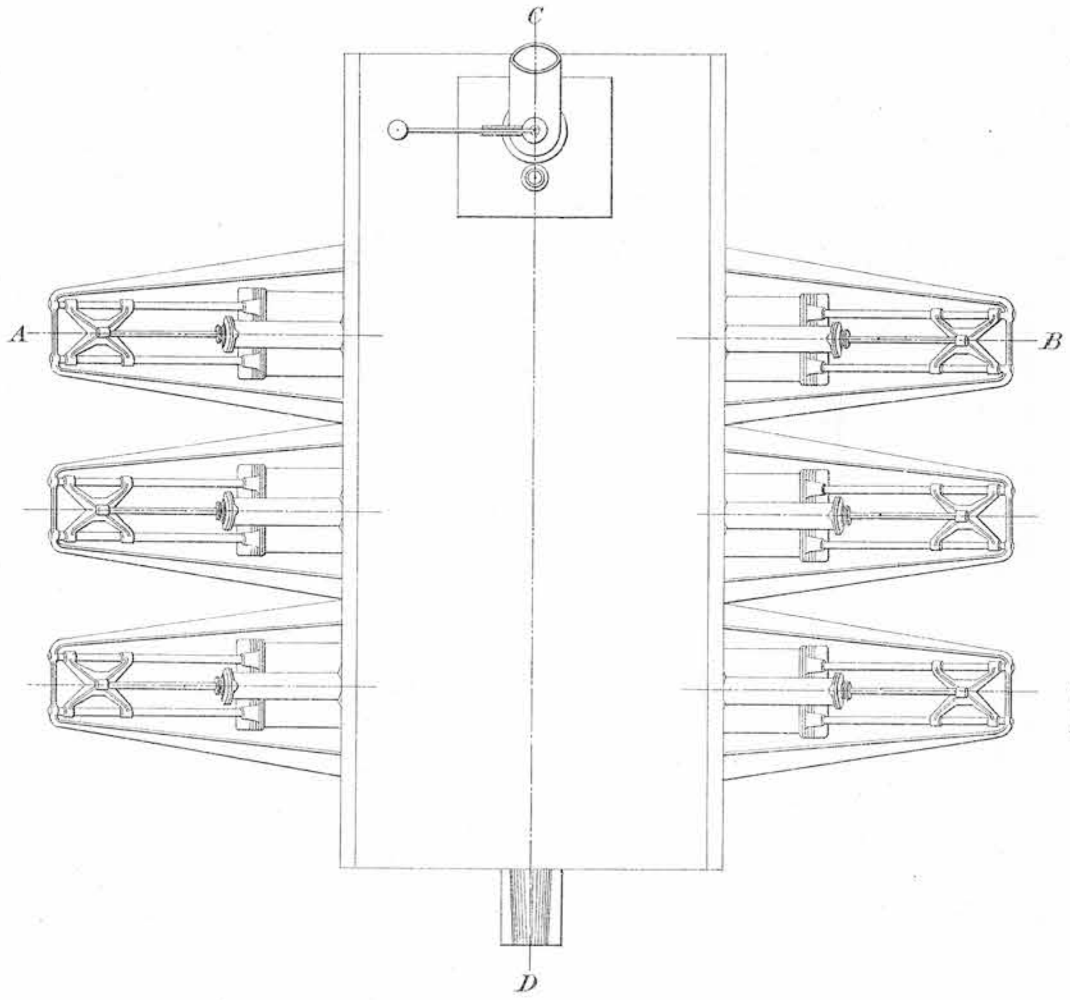

Side view

Fig. 9a

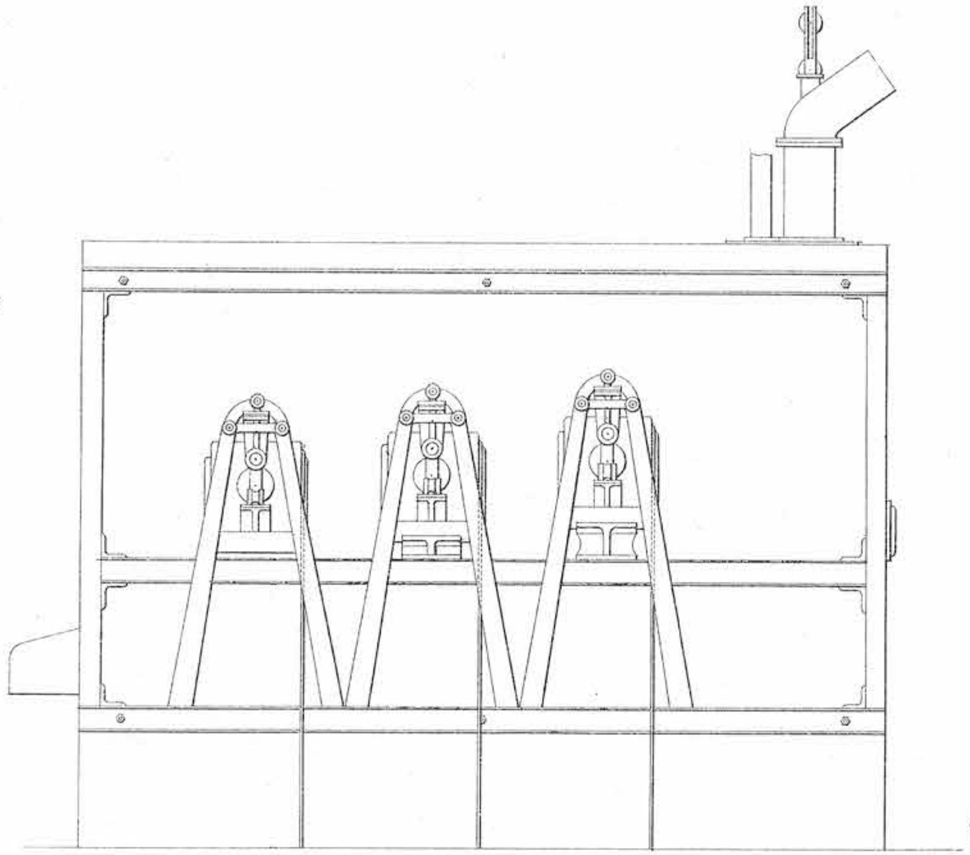

Section CD

Fig. 10a

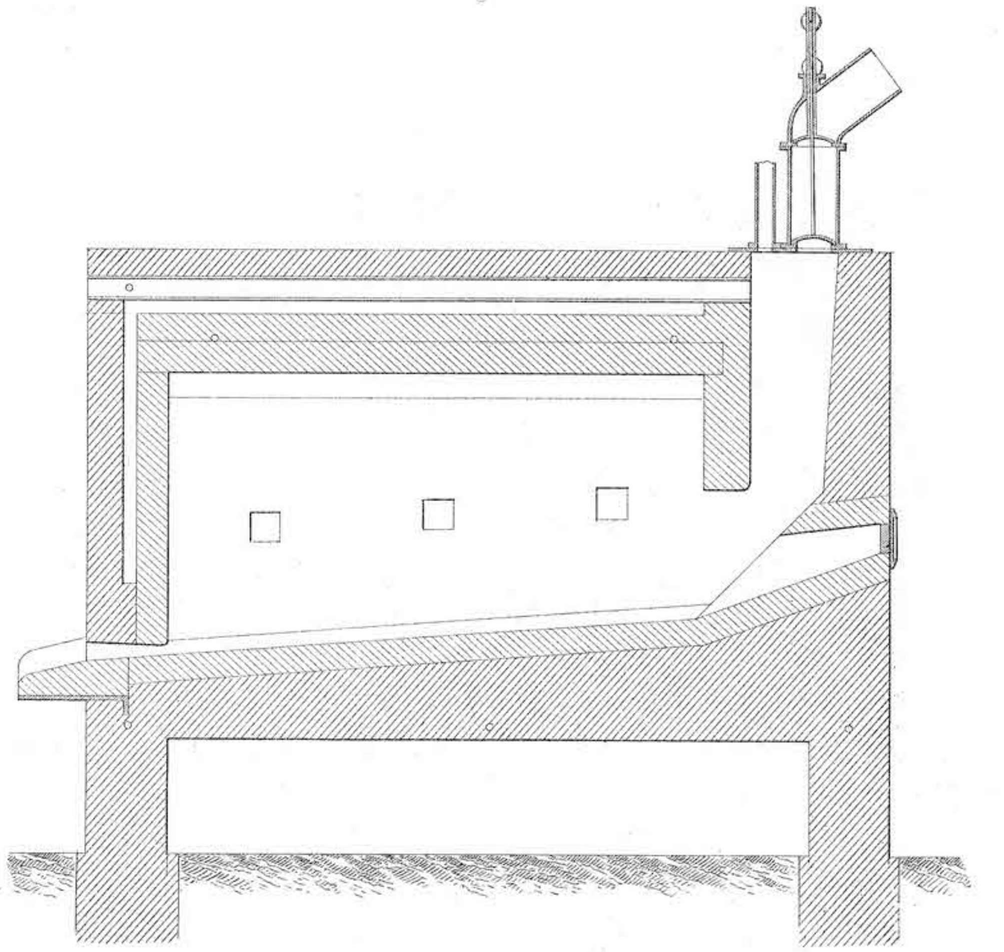

Plate IV.

ELECTRO-THERMIC PROCESS FOR THE REDUCTION OF IRON ORE

Rotating electric furnace

Section AB

Fig. 11a

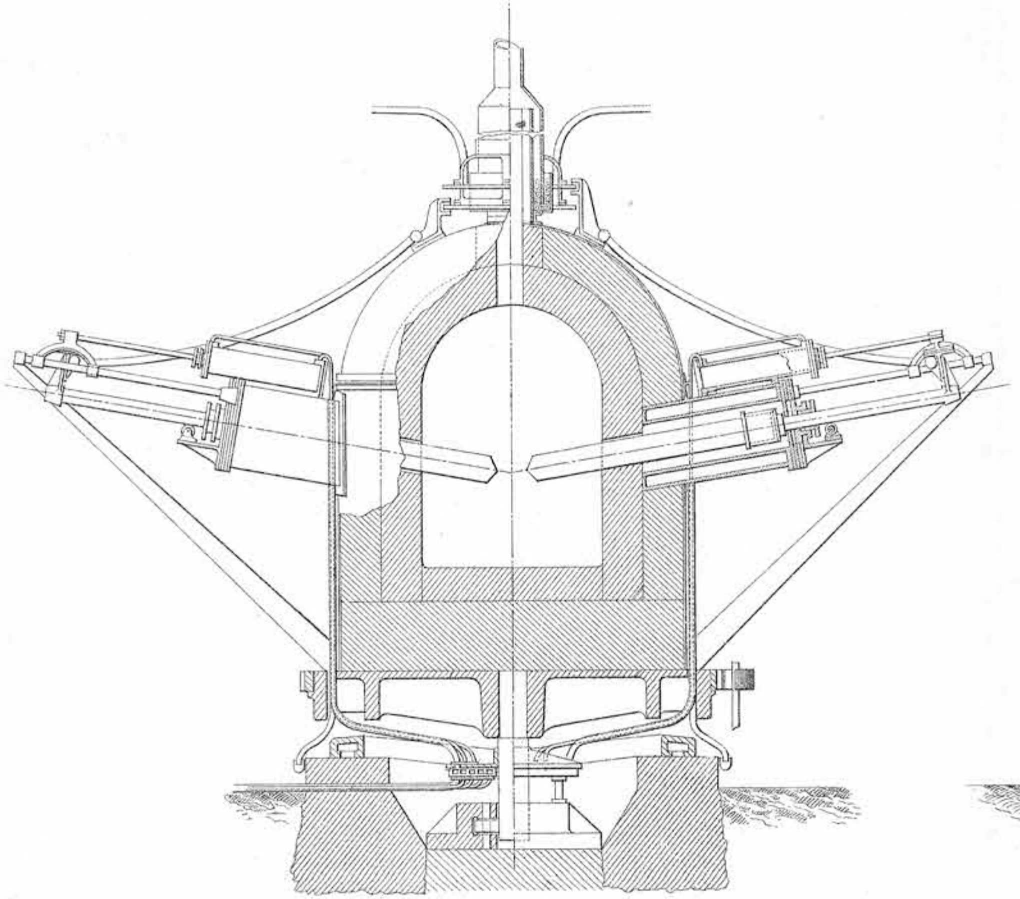

Section CD

Fig. 12a

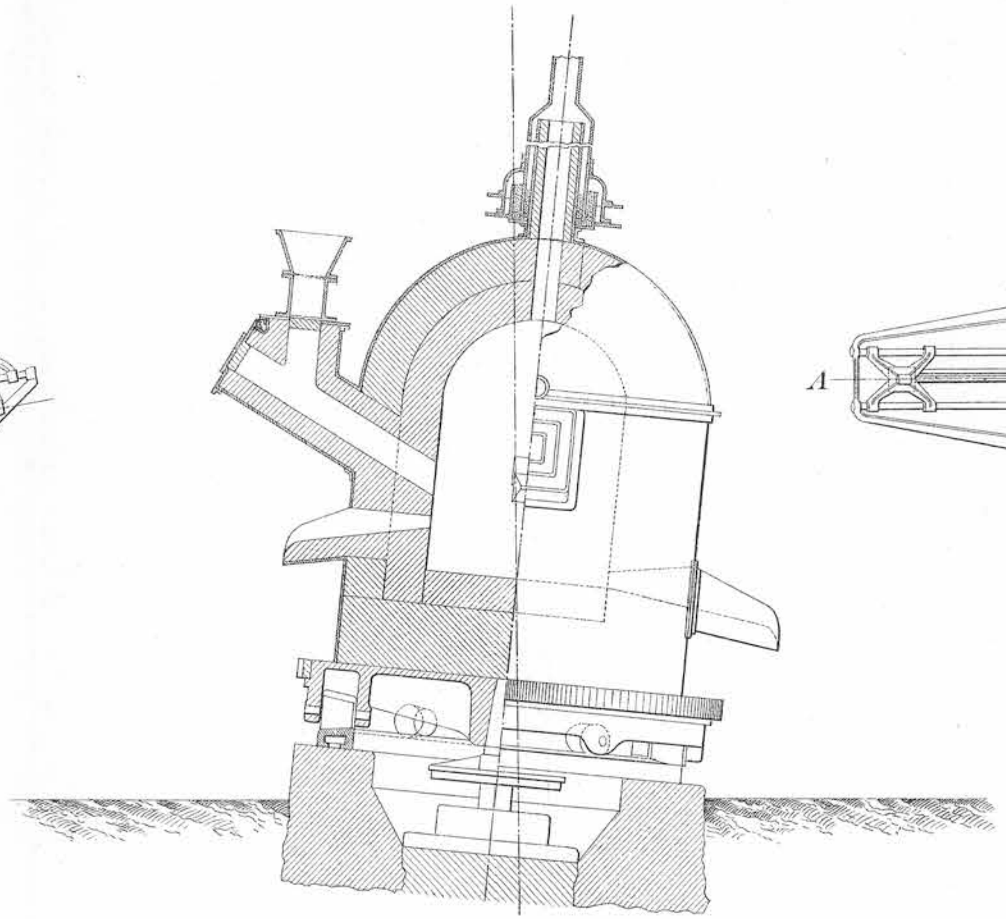

Top view

Fig. 13a

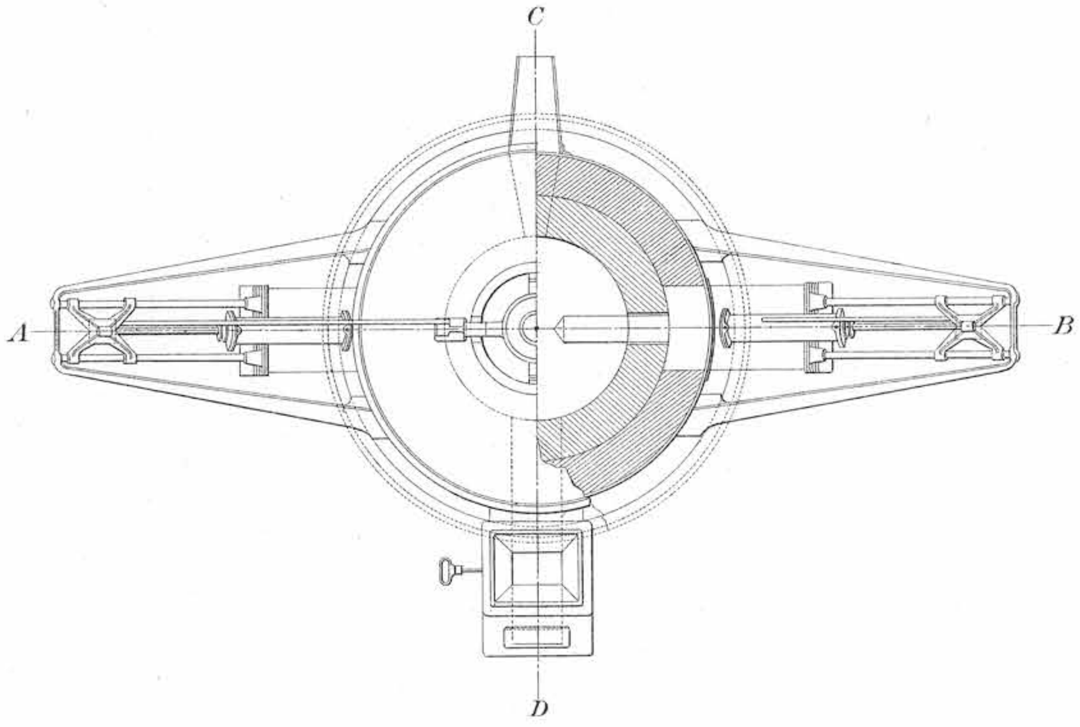

LECTURE ON THE TREATMENT OF COPPER ORES BY THE ELECTRIC FURNACE.

(KELLER PROCESS.)

BY

M. CH. VATTIER.

LECTURE ON THE TREATMENT OF COPPER ORES BY THE ELECTRIC FURNACE.*

(Keller Process)

Compagnie Electrothermique Keller et Leleux.

BY M. VATTIER.

It is now some two years since I had the pleasure, in this very hall of reading a paper on the very remarkable results obtained from experiments on the treatment of iron ores in electric furnaces. I gave a description of the electro-metallurgical works which I had had the opportunity of visiting, both in Europe and the United States; and at the time I expressed the hope that these new processes, owing to the development of the energy of the "White Coal," would soon prove economical and practical, and would then leave the realm of the laboratory and of experimental plants to boldly enter the industrial arena.

You are all familiar with the yet recent history of electro-metallurgy; with the scientific observations of such men as Moissant, Siemens. Acheson, Minet and other authorities, as a starting point. We have witnessed the strenuous labors of Stassano, Héroult, Laval, Keller, and others, whose names would make up a long list, and whose efforts are striving toward the advent of a new electric metallurgy which bids fair to become the metallurgy of the future.

Twice in three years I have been entrusted by the Chilian government with the study of the latest developments of electro-metallurgical processes in Europe and the United States. In August last, I brought over from Chili some 200 tons of copper and manganese ores for the purpose of making experiments on a commercial scale, on the smelting of these ores in the electric furnace. The main object of this paper is to give you the results of these experiments. I shall be as brief as possible, owing to the necessity of yielding my place to several eminent lecturers.

After a few preliminary experiments, I was authorized to continue my investigations on this subject, in the works of Messrs. Keller et Leleux, at Kerousse, in Brittany, under the direction of Mr. Keller. After discussing the subject with him, we agreed upon the method of procedure, the form of the furnace and accessory apparatus to be adopted; these were subsequently put in operation in the Keller and Leleux electro-

---

* From the French.

metallurgical works at Livet, near Grenoble, where they have given entire satisfaction.

A first series of experiments, conducted on a sample of commercial size, and in furnaces such as will be adopted in future in electro-metallurgical works, had conclusively proved that the problem had been solved as regards copper ores.

On April 21st last, we made a new series of experiments at Livet, on Chilean copper ores, before a Commission composed of the following members:—

Messrs. Stead, Metallurgical Engineer, Middlesbrough; Allen, Metallurgical Engineer, Sheffield; Reynolds, Metallurgical Engineer, London; Pirie, Member of the British House of Commons for Aberdeen; Saladin, Chief Engineer of the Creusot Works; de la Bouglise, Mining Engineer, Paris; Renevey, Civil Engineer, Paris; Bougère, Banker, Angers; and Vattier, Engineer, graduate of the Ecole Centrale.

A report of these experiments, endorsed and signed by the members of the Commission, accompanies this paper. Mr. Keller had charge of the electrical part of the experiments, and the writer was directing the metallurgical part.*

* These experiments were conducted in the works of the Compagnie Electro-thermique Keller et Leleux at Livet, on April 21st, 1903, in presence of:

Messrs. Stead, Metallurgical Engineer, Middlesbrough.
Allen, do do Sheffield.
Reynold, do do London.
Pirie, Member of the British House of Commons for Aberdeen.
Saladin, Chief Engineer of the Creusot Works.
Vattier, Delegate Engineer in charge of investigations for the Chilean Govt.
de la Bouglise, Mining Engineer, Paris.
Renevey, Civil Engineer, Paris.
Bougère, Banker at Angers.

The experiments were in charge of Mr. Keller, Civil Engineer, technical manager of the Compagnie Electro-thermique Keller, Leleux et Cie.

The smelting was conducted in the double electric furnace, Keller model.

Ores:—Mixture of ores from the "Volcan," "Magnere" and "Charlin" mines in the proportions indicated by Mr. Vattier. The experiment was made on 8000 kgs., which were smelted in 8 hours.

Power.—This was:

$$\underset{\text{Amperes}}{4750} \times \underset{\text{Volts}}{119} \times \underset{\cos\varphi}{0.9} = 500 \text{ kilowatts.}$$

Working of Apparatus:—Perfectly normal.

Consumption of Electrodes:—The electrodes used were of inferior quality; yet the wear in length only amounted to 6 or 7 kgs. per ton of ore. According to a statement made by Mr. Keller, in a previous experiment with carbons of a somewhat higher grade, the consumption was 5 kgs. per ton of ore as maximum. By using graphite electrodes this would still be further reduced.

Products Obtained.—The matte and the slag were tapped separately, tests were made, the analyses giving:

Matte....................	Cu. 43%
Slag.....................	Cu. 0.1%

(Signed)

C. Vattier, A. Allen, E. Stead, A. Reynolds, Renevey,
D. V. Pirie, de la Bouglise, G. Bougère, A. Keller.

Before proceeding, I wish to state clearly the object we had in view.

We are not dealing here with a philosopher's stone which would, as by magic, transform any copper ore into a mass of pure metallic copper, or which would overthrow and supersede the well-known reactions of the old metallurgy of copper. Nor do we pretend to have discovered a process which suppresses all the cost of production, and permits of reaping imaginary millions from any kind of ore under any conditions. We abandon the monopoly of these pretentions to the fancy prospectuses which circulate in certain financial centres, and which cause such disappointment to the credulous investors, and we approach the subject in a more scientific and industrial spirit, and especially with the intention of facilitating, within the limits of our powers, the labour of the indefatigable workers who strive to further improve these processes, and whose efforts deserve praise and reward.

You all know that, generally speaking, in the metallurgy of copper by dry processes, either in reverbatory or water-jacketed furnaces, the copper ores are first of all converted by the help of coke or coal into copper matte containing 40% to 50% of the metal; these mattes are then submitted to a roasting, followed by a remelting, either by special treatment in converters or in Thofern and Saint-Seine reaction furnaces, which transforms them into copper bars; these are then refined by electrolytic processes, which produce the pure copper and effect the separation of the gold and silver.

At present our object is solely to suppress the consumption of fuel (coke, coal or charcoal) used to smelt the ore for the production of the matte, and to replace these calories of the black coal by electric heat derived from the "white coal," that is from hydraulic forces. Then, we proceed to the refining of this matte by the processes now in use in metallurgy (converters, furnaces, &c.), and all we ask from electricity is to lend us its aid to produce the heat, whenever it can be done with advantage, by the introduction of the electrodes.

In a word, the endeavour is to develop a process which could be established in regions favorably situated as regards water powers, and where coal is costly; it is the difference between the cost of the black coal and the "white coal," which shall constitute the main profit derived from the adoption of these new processes. It is bearing these conditions in mind that we made the series of experiments of which I shall now give you a brief account.

Ore.

Our experiments were conducted on two different kinds of ore.

1st.—Copper ore from the "Volcan" mine, Chili, belonging to Mr. Gregorio Denoso. The copper contents was approximately 7%, present as copper pyrites. This ore contains from 8% to 9% of sulphur, and the gangue comprises silicates, silica, a little carbonate of lime, but mainly micaceous copper oxide.

2nd.—Low grade copper ore from the mining regions in the vicinity of Santiago, Chili, mixed with a small proportion of manganese and lime.

The composition of the charge of the furnace was as follows:

	%
Carbonic acid	4.310
Silica	23.700
Alumina	4
Lime	7.300
Magnesia	0.33
Sulphur	4.125
Iron	28.500
Manganese	7.640
Phosphorus	0.046
Copper	5.100
Arsenic	trace

These ores were crushed partly into large pieces and partly to dust. The crucible was filled with a hand shovel, indiscriminately, of the coarse or dust, and without experiencing the inconveniences which usually accompany the presence of "fines" in the water-jacketed furnaces. All the charges were very carefully weighed and sampled, and an exact record of the various phases of the experiments was kept. Rather large blocks, at first refractory, were soon dissolved and incorporated in the molten charge, after undergoing a pronounced gyratory movement.

Furnaces.

The main furnace, for the first fusion or breaking up of the molecules by the application of heat, is a chamber or crucible built of refractory bricks, and having the following dimensions: Length, 1.800m.; width. 0.90m.; height, 0.90m. Below this chamber we have a forehearth, in which can be effected the sharp separation of the matte from the slag; the dimensions of this fore-hearth are as follows: Length, 1.20m.; width, 0.60m.; height, 0.60m.

At the bottom of the upper chamber there are some openings which can be tamped at will by means of fire-clay, for the purpose of tapping the contents into the lower fore-hearth. In the upper chamber two carbon electrodes, with a square section of 0.30m. on the side, and a length of 1.70m., are introduced, and their height may be so regulated as to either be immersed in the bath or just clear its surface.

Into the fore-hearth penetrate two carbon electrodes of 0.25m. on the side, which are used to reheat the bath. Openings are left at different levels of the fore-hearth, and which are opened by means of steel rods driven in by blows of a hammer, for the purpose of tapping either the slag into small sand trenches, or the matte into steel ingot-moulds, which are handled by an overhead crane. Voltmeters and ammeters permit of observing the intensity of the current. Alternating current was used. A special contrivance allows of easily and independently raising and lowering each of the electrodes.

Procedure of Operations.

The two large electrodes are lowered into the upper chamber, and the circuit is established by the introduction of pieces of carbon and of matte placed at the bottom of the crucible, and the temperature is gradually raised. The ore is elevated by a hoist to an upper platform, and is charged into the furnace around the electrodes, which are raised in proportion as the burden increases. Fusion begins to take place in a very short time, and when the crucible is full of molten or semi-molten material, a tap-hole, situated some 0.10m. from the bottom, is unplugged by means of a steel rod. The molten mass, more or less pasty (quite fluid after a short time), flows into the fore-hearth, where the reactions are completed, and where the separation of the liquified materials is effected by means of the reheating electrodes.

When this fore-hearth is nearly full, the slag is evacuated through one of the upper openings, and as soon as the quantity of underlying matte is judged to be sufficient, it is tapped off by one of the lower openings. It is thus a process of successive tappings, both from the upper and the lower crucibles.

Data of the Method.

The furnace has a smelting capacity of 25 tons of ore per 24 hours, which it converts into matte. The current used for the experiments was of 4,750 amperes; 119 volts; $\cos \varphi = 0.9$, which corresponds to 500 kilowatts, or 680 H.P. Therefore, to treat 100 tons of ore per 24 hours will require from the dynamos 2,833 H.P., in round numbers, 3,000 H.P. of 76 kg/m.

Products Obtained.

Mattes of the following composition were obtained:

	%
Silica	0.800
Alumina	0.500
Iron	24.300
Manganese	1.400
Sulphur	22.960
Phosphorus	0.005
Copper	47.900

And slag of the following composition:

	%
Silica (SiO_2)	27.200
Alumina	5.200
Lime	9.900
Magnesia	0.390
Iron	32.500
Manganese	8.230
Sulphur	0.570
Phosphorus	0.062
Copper	0.100

The slags at both the beginning and the end of the operation usually contain a slightly higher proportion of copper.

The slag has high contents of iron and silica, and could be used to manufacture ferro-silicon; for this purpose it should be poured directly into a special crucible, submitted to the high temperature of the electric furnace as soon as possible, in order to take advantage of the heat it possesses when it is tapped out of the crucible.

If the slag should be high in manganese, it could be manufactured into ferro-manganese and spiegels.

Remarks.

For good results it is advisable to use a voltage sufficient to cause the arc or electric current to pass from one electrode to the other, by regulating their height to just clear the surface of the bath, in order to avoid as much as possible their coming in contact with the bath. Carbon, at such high temperatures, has a tendency to reduce the iron oxide into metallic iron, which gives rise to the following inconveniences:

1st.—A more rapid wear of the electrodes.

2nd.—Loss of electric energy.

3rd.—Decrease of the copper contents of the matte.

By the use of Acheson's graphite electrodes, these inconveniences would be greatly diminished.

The economic and other advantages of this new electro-metallurgical process are at present quite evident, without having to defer judgment until further improvements are introduced; the problem may be said to have been solved by the Livet experiments.

Comparison between the old Processes of Copper Metallurgy and those of Electro-Metallurgy.

Let us consider the case of a copper mine situated in South America, in Chili, for instance, and at some distance from the coast, in the foothills of the Cordillera; such a mine is the " Volcan," the ore from which was submitted to the experiments of electric smelting; under these conditions coke costs at least 100 frs., and owing to the slope and other local conditions, a powerful and constant hydraulic power can be developed economically. We shall take for purposes of comparison the figures relating to one ton of copper ingots, extracted from the " Volcan " ore, which has a copper content of 7%; this is a comparatively high tenor, higher than the average of mines worked on a large scale.

For the production of a ton of copper we shall have to treat some 16 tons of ore; we shall neglect the figures, which would be the same for both cases as regards mining of the ore and subsequent treatments, and we shall restrict ourselves to the comparative elements of the two methods.

1st.—In the present water-jacketed furnace, the production of the matte, containing one ton of metallic copper, shall require 3,200 kgs. of coke, at 100 frs. per ton, that is to say, an expenditure for fuel of 320 frs.

2nd.—In electric furnaces the smelting of 16 tons of ore will require an energy of 1.25 kilowatt-year, at the cost, in the region in question, of 30 frs. per kilowatt-year, representing a cost of 1.25 x 30 = 37.50. frs., say 38 frs.

The wear of electrodes, as shown by our experiments, amounted to 75 kgs. per ton of copper in matte, so that we may calculate an actual cost of 45 frs. for this item; this would be greatly reduced by the adoption of electrodes such as above mentioned, and more especially of graphite electrodes.

In short, the electro-metallurgical process for the smelting of 16 tons of ore would entail a cost of :

$$38 + 45 = 83 \text{ frs.}$$

and the economy effected, over the water-jacketed furnace, in the fundamental element of heat energy, is, therefore:

$$320 - 83 = 237 \text{ frs., or more than £9.}$$

The additional important advantages derived from the use of electric furnaces are the following:—

1st.—Suppression of the blowing engines, which are essential in connection with water-jacketed furnaces.

2nd.—The possibility of operating on much more refractory ore than with the water-jacketed furnace.

3rd.—Suppression of the manufacture of briquettes or of agglomeration of the fines and dust.

4th.—Notable decrease of cost of labour.

5th.—Elimination of the danger of scaffolding of the charge in the interior of the furnace; this accident is comparatively frequent and costly in the water-jacketed apparatus; moreover, choking up and obstruction of the hearth is likewise avoided.

Let us now consider the case of low grade ore, say 4%; the production of one ton of metallic copper in matte shall require:

1st. In water jacketed furnace, an additional expenditure of coke amounting to

$$\frac{100}{1000} \text{ x } (5{,}000 - 3{,}200) = 180 \text{ frs.}$$

2nd.—In the electric furnace, instead of 1.25 kilowatt year, we shall need two, which entails an additional cost of

$$30 \text{ x } (2 \text{ kwt.-yr.} - 1.25 \text{ kwt.-yr.}) = 22.50 \text{ frs.}$$

Which represents an additional saving of 157.50 frs., which figure is comparatively important for a low grade ore.

It is, of course, impossible to arrive at a general average figure representing the saving effected by the adoption of the electric furnace; this depends on the grade of the ore, and also greatly on the local conditions; yet, in the case of the ores produced from the South American mines, remote from the coast and in proximity of powerful and constant waterfalls, the economy effected would certainly not be less than £10.

Conclusions.

It is of great interest and importance that our metallurgists should continue their researches in the practical applications of the electric furnace to the smelting of copper and other ores, and more particularly to the treatment of those argentiferous blendes which are very abundant in certain regions (in Bolivia, for example), and which, up to the present time, have proved refractory to all economical processes known.

The same remark applies to the iron and manganese ores known to exist in large quantities in remote regions, and at present awaiting a practical solution of the problem which will permit of their being economically treated on the spot, avoiding the costly transportation of raw materials, which the present price of these metals cannot bear.

Yet, in spite of the great advantages which will certainly be derived from the introduction of electric processes into certain regions, such as parts of Chili where the industrial conditions are favorable in every respect, and more especially as regards ore deposits and waterfalls, I feel it to be my duty to warn my colleagues, and investors in general, against sanguine expectations and exaggerations, which could not but have disastrous effects. So that, before investing any capital in electro-metallurgical plants in remote regions, it would be well to ascertain beyond doubt:

1st.—That you can rely on mines, with property titles clear and in good standing, which could produce (actually, and not on paper), a sufficient quantity of ore of high enough grade to justify the installation of electro-metallurgical plants, which are very costly, owing to the need of developing hydraulic power.

2nd.—That either in the neighbourhood of these mines or within a distance permitting the economical transmission of electric energy, there are available powerful, and more particularly constant, water powers which could be acquired without fear of subsequent litigation.

3rd.—That sufficient labour and other industrial conditions for the exploitation of the mines are available in the regions under consideration.

A long experience has convinced me that these conditions may be met with separately, but very rarely together, and it is our duty to protect the French savings from the mirage of the more or less fancy and hazardous speculations which constantly assail the small investor.

In conclusion, let us rejoice that it is in France that the greatest impetus has been given to electro-metallurgy, and that once more our country has taken the lead in a great scientific and industrial movement.

VALUES OF FOREIGN MONEY IN CANADIAN CURRENCY.

Swedish ....1 Krona = 100 Öre = 27¼ cents

French ....1 Franc = 100 centimes = 20 cents

Italian ....1 Lira = 100 centimes = 20 cents

WEIGHTS

1 Kilogram = 2.2 lbs. Avoirdupois.

1 Metric Ton = 1000 Kilograms = 2200 lbs.

MEASURE OF LENGTH

1 Meter = 10 Decimeters = 100 Centimeters = 1000 millimeters.

1 Meter = 39.37 inches.

1 Decimeter = 3.93 "

1 Centimeter = 0.39 "

1 Millimeter = 0.039 "