CANADA
DEPARTMENT OF ENERGY, MINES AND RESOURCES
Observatories Branch

PUBLICATIONS

of the

DOMINION OBSERVATORY

OTTAWA

Volume XXXIX • No. 10

PROCEDURES FOR CALCULATING TERRAIN CORRECTIONS FOR GRAVITY MEASUREMENTS

R.A. Stacey and L.E. Stephens

THE QUEEN'S PRINTER FOR CANADA
OTTAWA, 1970

Contents

PROCEDURES FOR CALCULATING TERRAIN CORRECTIONS FOR GRAVITY MEASUREMENTS

R.A. Stacey and L.E. Stephens

ABSTRACT: The published methods of computing terrain corrections for Bouguer anomalies from topographic data based on hollow cylinder, vertical prism, frustum of a cone and inclined plane models are reviewed. The method used at the Dominion Observatory is based on a combination of the hollow cylinder model for representing the local terrain and the prism model for the regional terrain. This method has been developed specifically for use in the Cordilleran region of western Canada and is intended to give final Bouguer anomalies as accurate as those based on measurements in the Prairie and Shield regions of Canada where the topography is more subdued. It is concluded that this accuracy is only possible if: (i) the observed gravity values are of the same accuracy throughout Canada; (ii) the coordinates and elevation of stations in the Cordillera are accurate to 100 m and 7 m, respectively; (iii) 1:50,000 topographic maps are available for the area of the gravity survey; and (iv) the resulting terrain correction is less than 12.5 mgal.

The specifications for the computer programs developed in conjunction with the methods used at the Observatory are given in an appendix to the report.

RÉSUMÉ: Les auteurs examinent les méthodes connues de calcul des corrections de terrain appliquées aux anomalies de Bouguer à partir de données topographiques obtenues à l'aide de modèles à cylindre creux, à prisme vertical, à tronc de cône et à plan incliné. La méthode utilisée par l'Observatoire fédéral est fondée sur la combinaison du modèle à cylindre creux, pour la représentation du terrain à l'échelle locale, et du modèle à prisme, pour celle du terrain à l'échelle régionale. Cette méthode, spécialement mise au point pour la région de la Cordillère, devrait permettre d'établir des anomalies de Bouguer aussi précises que celles qui sont tracées d'après les mesures prises dans les régions des Prairies et du Bouclier canadien dont le relief est moins accentué. Les auteurs concluent que ce degré de précision ne peut être atteint que si: (i) les mesures gravimétriques ont la même précision dans tout le Canada; (ii) les données planimétriques et altimétriques des stations dans la Cordillère sont connues, respectivement, à 100 m et 7 m près; (iii) il existe des cartes topographiques au 1:50,000 pour les régions étudiées; et (iv) les corrections de terrain correspondantes sont inférieures à 12.5 mgal.

Les prescriptions techniques des programmes d'ordinateur mis au point pour exploiter les méthodes utilisées par l'Observatoire sont annexées au rapport.

Introduction

Given a value of gravity measured at a particular latitude, longitude and elevation relative to some datum, the standard reduction procedure is:

1. The theoretical value of gravity at the latitude of the observation is computed using the International Formula of 1930 and the result is removed from the measured value of gravity.

2. This result is then corrected to a particular datum (normally mean sea-level) to obtain the Free-air anomaly. The vertical gradient of gravity used for this correction is 0.3086 mgal/m, increasing towards the centre of the Earth.

3. To obtain the simple Bouguer anomaly a further correction is made for the material between the observation point and the datum which is approximated to an infinite horizontal slab of thickness equal to the elevation of the observation point relative to the datum and a standard density of 2.67 g/cm^3 is used for rock (Figure 1). The infinite slab approximation can be improved by taking into account the curvature of the Earth. It can also be improved by taking into account the upward attraction of ground above the level of the observation point and the lack of downward attraction due to valleys below the level of the station (Figure 1). This is known as the 'terrain correction' and can have a considerable effect on the value of the Bouguer anomaly. In the first section of this report some of the procedures used for calculating the terrain corrections for Bouguer anomalies are outlined. There appear to be four basic models which can be used to represent the topography in the vicinity of a gravity observation: (i) a segmented hollow cylinder, (ii) a rectangular vertical prism, (iii) the segmented frustum of a cone, and (iv) an inclined plane.

The following sections of the report deal with the techniques adopted by the Gravity Division of the Dominion Observatory for computing terrain corrections for gravity measurements made in the mountainous regions of British Columbia. An attempt has been made to assess the errors inherent in the approximations used in the various methods. The specifications for the computer programs which have been written by members of the Gravity Division to facilitate the terrain correction calculations are given in the appendix.

Review of Published Methods

Segmented Hollow Cylinder Model

The area around the gravity station can be divided into zones and compartments by laying a transparent graticule,

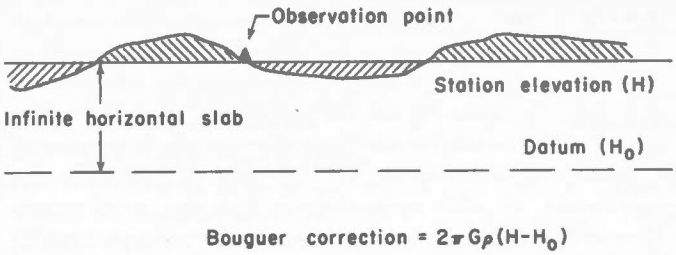

FIGURE 1. The Bouguer correction.

centred on the station, over a topographic map (Figure 2). Each compartment is a section of a hollow vertical cylinder – the station being on the axis of the cylinder and the height of each segment being the difference between the mean elevation of the compartment as estimated from the topographic map, and the station elevation. The expression for the gravitational attraction of such a segment at the station is:

$$\Delta g = \frac{2\pi G\rho}{n}\left[r_2 - r_1 + (r_1^2 + \Delta h^2)^{1/2} - (r_2^2 + \Delta h^2)^{1/2}\right]$$

where r_1 and r_2 are the inner and outer radii of the cylinder and n is the number of compartments in the zone defined by r_1 and r_2. The total terrain correction for the station is the sum of the attractions due to each compartment in each zone.

This model was first used by Hayford and Bowie (1912) for calculating terrain corrections in the course of isostatic studies. The method was refined by Hammer (1939) who gives terrain correction tables accurate to 0.1 mgal and again by Bible (1962) who increased the number of compartments close to the station to improve the representation of the topography in this area. The graticules which accompany both sets of tables extend 71,996 feet (approximately 22 km) from the station.

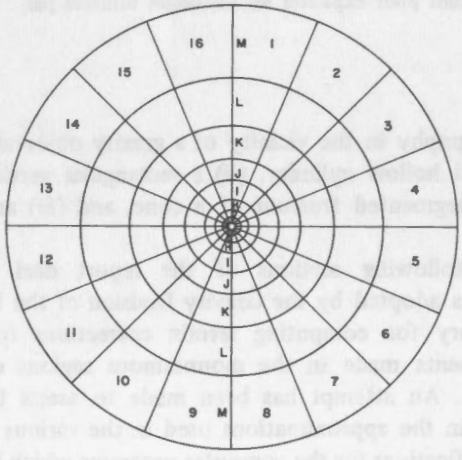

Zone	B	C	D	E	F	G	H	I	J	K	L	M
Compartment	4	4	8	16	16	16	16	16	16	16	16	16
Inner radius	6.56	54.6	175	558	1280	2936	5018	8578	14662	21826	32490	48365
Outer radius	54.6	175	558	1280	2936	5018	8578	14662	21826	32490	48365	71996

FIGURE 2. Bible's version of the terrain correction graticule.

These procedures involve calculating the difference between the mean elevation of a compartment and the elevation of the station and referring to the tables for its contribution to the terrain correction a total of 132 times for the Hammer chart and 160 times for the Bible chart. As an alternative to this, the mean elevations read from the map can be transferred to cards and a computer can be used to calculate the contribution of each compartment and the total terrain correction with a considerable saving in man-hours per station. A computer program written for this purpose is described in Section B of the Appendix to this report.

Corrections can be made for the curvature of the Earth (Hayford and Bowie, 1912; and Bullard, 1936) but these are not significant unless terrain beyond the furthest zone considered in the tables is taken into account.

Rectangular Vertical Prism Model

The topography around the gravity station can be represented by a series of rectangular vertical prisms. The horizontal cross section of the prisms is relatively small in the vicinity of the station for a better representation of the terrain, with larger prisms being used as the distance from the station increases. The advantage of using this method of representing the topography over the cylinder model used in the previous section, is that once elevation data in an area have been digitized, the data can be used for any number of gravity stations.

Bott (1959) has described a computerized method based on the prism model which approximates the attraction of the prism to that of a vertical line mass:

$$\Delta g = G\rho A^2\left[\frac{1}{r} - \frac{1}{(r^2 + \Delta h^2)^{1/2}}\right]$$

where A is the length of one side of the square-topped prism and r is the distance from the station to the centre of the prism in the plane of the station.

If $\Delta h < 0.25\,r$ this expression can be reduced to

$$\Delta g = \frac{G\rho A^2}{2} \times \frac{\Delta h^2}{r^3}$$

As an alternative to the line mass approximation Bott (1959) and Kane (1962) have both suggested using a segment of a hollow cylinder to represent the vertical prism. The expressions they give for the gravitational attraction of this model are

(a) Bott,

$$\Delta g = \frac{G\rho A^2}{2} \times \frac{\Delta h^4}{r(r^2 - p^2)}$$

where the inner and outer radii of the hollow cylinder are $r \pm p$ and p is the half-width of the horizontal side of the prism. The errors due to this approximation relative to those due to the line mass are given in Figure 3(a).

(b) Kane,

$$\Delta g = \frac{2G\rho A^2\left[r_2 - r_2 + (r_1^2 + \Delta h^2)^{1/2} - (r_2^2 + \Delta h^2)^{1/2}\right]}{(r_2^2 - r_1^2)}$$

where r_1 and r_2 are the inner and outer radii of the hollow cylinder and the remaining variables have the same meaning as in Bott's equations. To improve this approximation Kane has suggested replacing r_1 and r_2 by $(r - c)$ and $(r + c)$, where r is the distance from the station to the centre of the prism and c is a constant relating the results of this expression with those from the complete expression for the attraction of a prism (see below). The value of c determined by Kane is $(0.63 \times A)$, so

$r_1 = (r - 0.63 \times A)$ and $r_2 = (r + 0.63A)$. This approximation is accurate to 2 per cent (or 0.1 mgal, whichever is larger) of the actual correction when $\Delta h < r$.

Bott omits prisms within 0.99 km of the station (generally an area 2 X 2 km) and Kane an area 2 X 2 km in the immediate vicinity of the station, in favour of a more refined technique. For this area Bott uses the hollow cylinder model described earlier and Kane uses a version of the inclined slope model to be described later in this report.

Nagy (1966) has developed the exact expression for the gravitational attraction of a vertical prism, thus permitting all the topography to be represented by this model. The complete expression is:

$$\Delta g = G\rho \Bigg[x_2 \left\{ \ln \frac{y_2 + \sqrt{x_2^2 + y_2^2}}{y_2 + \sqrt{x_2^2 + y_2^2 + h^2}} \right\} - \ln \frac{y_1 + \sqrt{x_2^2 + y_1^2}}{y_1 + \sqrt{x_2^2 + y_1^2 + h^2}} - x_1 \left\{ \ln \frac{y_2 + \sqrt{x_1^2 + y_2^2}}{y_2 + \sqrt{x_1^2 + y_2^2 + h^2}} - \ln \frac{y_1 + \sqrt{x_1^2 + y_1^2}}{y_1 + \sqrt{x_1^2 + y_1^2 + h^2}} \right\} + y_2 \left\{ \ln \frac{x_2 + \sqrt{x_2^2 + y_2^2}}{x_2 + \sqrt{x_2^2 + y_2^2 + h^2}} - \ln \frac{x_1 + \sqrt{x_1^2 + y_2^2}}{x^1 + \sqrt{x_1^2 + y_2^2 + h^2}} \right\} - y_1 \left\{ \ln \frac{x_2 + \sqrt{x_2^2 + y_1^2}}{x_2 + \sqrt{x_2^2 + y_1^2 + h^2}} - \ln \frac{x_1 + \sqrt{x_1^2 + y_1^2}}{x_1 + \sqrt{x_1^2 + y_1^2 + h^2}} \right\} + h \left\{ \arcsin \frac{y_2^2 + h^2 + y_2\sqrt{x_2^2 + y_2^2 + h^2}}{(y_2 + \sqrt{x_2^2 + y_2^2 + h^2})\sqrt{y_2^2 + h^2}} - \arcsin \frac{y_2^2 + h^2 + y_2\sqrt{x_1^2 + y_2^2 + h^2}}{(y_2 + \sqrt{x_1^2 + y_2^2 + h^2})\sqrt{y_2^2 + h^2}} - \arcsin \frac{y_1^2 + h^2 + y_1\sqrt{x_2^2 + y_1^2 + h^2}}{(y_1 + \sqrt{x_2^2 + y_1^2 + h^2})\sqrt{y_1^2 + h^2}} + \arcsin \frac{y_1^2 + h^2 + y_1\sqrt{x_1^2 + y_1^2 + h^2}}{(y_1 + \sqrt{x_1^2 + y_1^2 + h^2})\sqrt{y_1^2 + h^2}} \right\} \Bigg]$$

The variables are defined in Figure 3(b). The computer program described by Nagy allows great flexibility in the size and arrangement of the prisms and it also permits the contribution to the terrain correction from particular areas to be determined in the course of the calculation. To increase the efficiency of the computer utilization Nagy has made provision for approximating the effect of prisms with sufficiently low elevations relative to that of the station and beyond a certain distance from the station, to that of a line mass.

Segmented Frustum of a Cone Model

Takin and Talwani (1966) have described a method for computing terrain corrections which uses the frustum of a cone as the basic model and takes into account the curvature of the Earth. Each topographic feature is divided into a

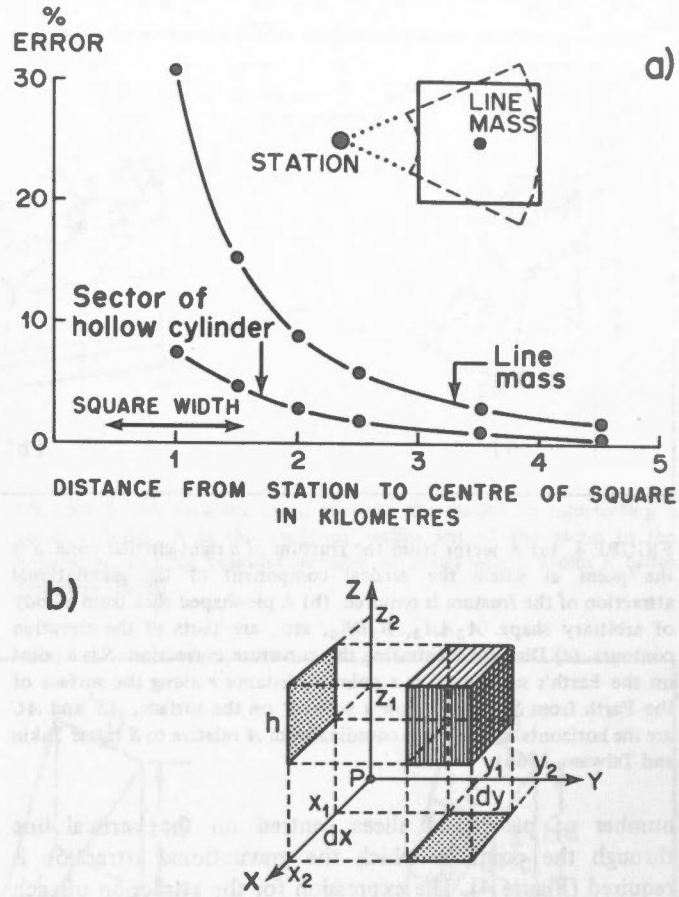

FIGURE 3. (a) Graph showing the errors involved in the approximation to the gravitational effect of a square of uniform height. The station is taken to lie in the symmetrical position shown (after Bott, 1959). (b) The right rectangular prism (after Nagy, 1966).

Abbreviations

Throughout this report the following abbreviations and units have been used.

Symbol	*Definition*	*Value*	*Units*
Δg	The gravitational attraction at the gravity station of a single unit of the topographic model (e.g., one segment of a hollow cylinder)	–	gal
G	Universal gravitational constant	6.673×10^{-8}	cgs
ρ	The density used for the Bouguer correction	–	g/cm^3
Δh	The elevation of a single unit of the model relative to the plane containing the station	–	cm
	All other dimensions	–	cm

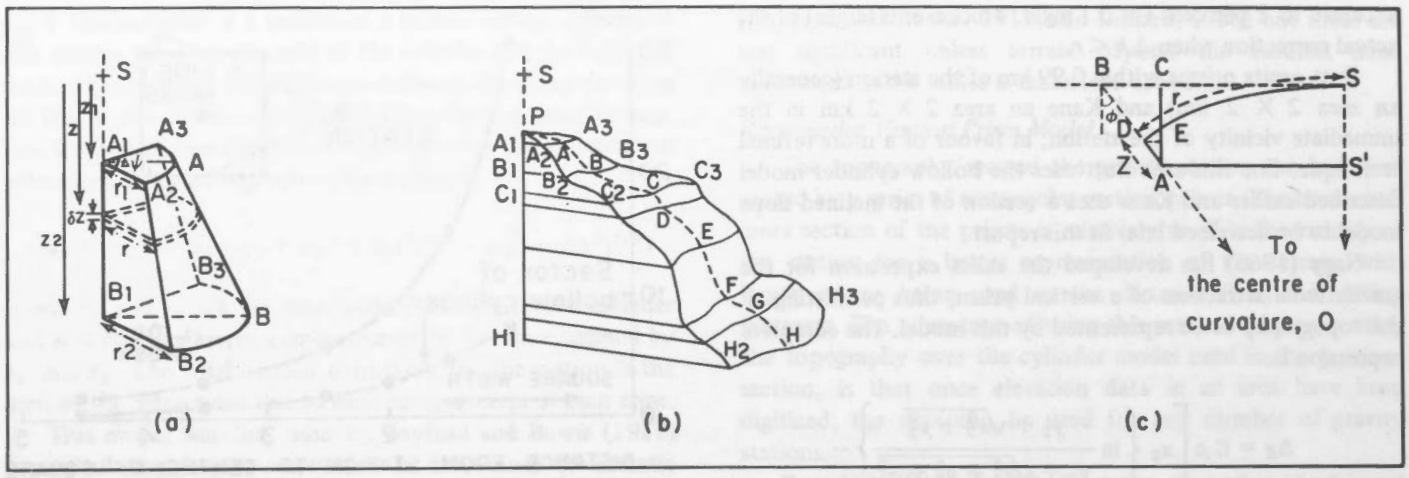

FIGURE 4. (a) A sector from the frustum of a right circular cone. S is the point at which the vertical component of the gravitational attraction of the frustum is required. (b) A pie-shaped slice from a body of arbitrary shape. A_2AA_3, B_2BB_3, etc., are parts of the elevation contours. (c) Diagram illustrating the curvature correction. S is a point on the Earth's surface., A is a point at distance r along the surface of the Earth from S, and Z below a point D on the surface. AS' and AC are the horizontal and vertical coordinates of A relative to S (after Takin and Talwani, 1966).

number of pie-shaped slices centred on the vertical line through the point at which the gravitational attraction is required (Figure 4). The expression for the attraction of each slice is

$$\Delta g = G\rho\Delta\Psi\left[z_2 - z_1 - \cos^2\beta\left(\sqrt{z_2^2+r_2^2} - \sqrt{z_1^2+r_1^2}\right) + (r_1\cos^2\beta\sin\beta - z_1\cos\beta\sin^2\beta)\ \ln\left(\frac{\sqrt{z_2^2+r_2^2}\cdot\cos\beta + z_2 + r_1\sin\beta\cos\beta - z_1\sin^2\beta}{\sqrt{z_1^2+r_1^2}\cdot\cos\beta + z_1 + r_1\sin\beta\cos\beta - z_1\sin^2\beta}\right)\right]$$

where β is the angle between AB (Figure 4(a)) and the vertical and the remaining variables are defined in Figure 4(b).

After correcting for the Earth's curvature the horizontal and vertical coordinates of A become (Figure 4(c)):

$$AS^1 = (R - z)\sin\Psi$$

and

$$AC = R\left(1 - \cos\Psi\left(1 - \frac{z}{R}\right)\right)$$

where $R = OS$, and the radius of the Earth and remaining variables are defined in Figure 4(c). This correction is generally insignificant within 25 km of the gravity station.

This method of representing the topography has the same advantage as the prism model in that the elevation data can be used for any number of gravity stations within the area of the model. Takin and Talwani use a Calcomp plotter to produce a contour map based on the digitized elevation data which can be compared with the original map to check the accuracy of the model. An additional advantage of the cone model is that it is readily compatible with the hollow cylinder model which is the basis of many published terrain correction tables. If it is more convenient, this same model can be used to compute the Bouguer anomaly in one step by including the infinite slab as part of the cone model.

Inclined Plane Model

Various specialized models have been used to represent the topography in the immediate vicinity of the station in addition to those based on segmented hollow cylinders and rectangular prisms, etc., described earlier. Tables for the gravitational attraction of an inclined plane have been published by Sandberg (1958) based on the expression given by Hammer (1939) for the gravitational attraction of a cylinder with an inclined end:

$$\Delta g = 2G\rho R\,[\pi - 2\cos\theta\cdot K(\sin\theta)]$$

where $K(\sin\theta)$ is the complete elliptic integral of the first kind and the remaining symbols are defined in Figure 5. The tables are compatible with those of Hammer and include zones A to H for inclinations of 1° to 30° inclusive. The model can be adapted to include a variety of topographic features (Figure 5).

Another method of representing the topography near the station which is compatible with a rectangular prism model has been given by Kane (1962). The central prism (2 X 2 km, centred on the station) is divided into eight parts (Figure 6(a-b)) and the surface of each octant is assumed to slope continuously from its apex to its outer edge. The gravitational attraction of each octant is obtained by approximating its effect to that of a segment of a cylinder with an inverted cone segment removed. The attraction of each octant is given by

$$\Delta g = \frac{\pi G\rho}{4}\left[R - \sqrt{R^2+H^2} + H\sin\beta\right]$$

R and H are the radius and height of the cylinder and β the slope. Further refinement can be achieved by subdividing the octant, as in Figure 6(c).

Procedures used at the Dominion Observatory

The methods for computing terrain corrections described in this section are based on a combination of the hollow cylinder model, for topography in the immediate vicinity of the gravity station, and the prism model for representing the regional topography. The technique has similarities with those described by Bott (1959), Kane (1962) and Nagy (1966), but has been developed primarily for computing terrain corrections in the Cordilleran region of western Canada.

Required Accuracy for Bouguer Anomalies

The Bouguer anomaly values in the Prairie and Shield areas of Canada are believed to be within 2 mgal of their actual value. Of this figure approximately 0.1 mgal can arise from instrument errors, 0.1 mgal from errors in the latitude of the observation point (corresponding to a distance of 200 m), and approximately 1.4 mgal from errors in the elevation of the observation point (equivalent to 7 m). Terrain corrections in these areas are neglected and could add up to 0.4 or 0.5 mgal to the error – giving a final Bouguer anomaly value which is probably within about 2 mgal of its actual value.

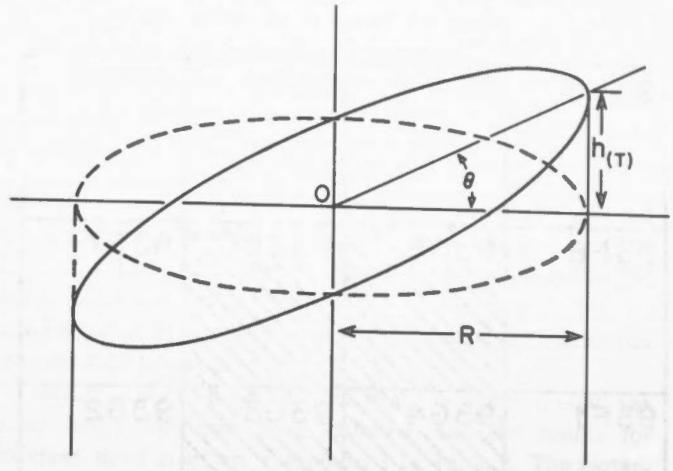

FIGURE 5. An inclined plane through the station O intersecting a zonal cylinder. θ is the angle of inclination of the plane to the horizontal, and the cylinder includes all zones within radius R (after Sandberg, 1958).

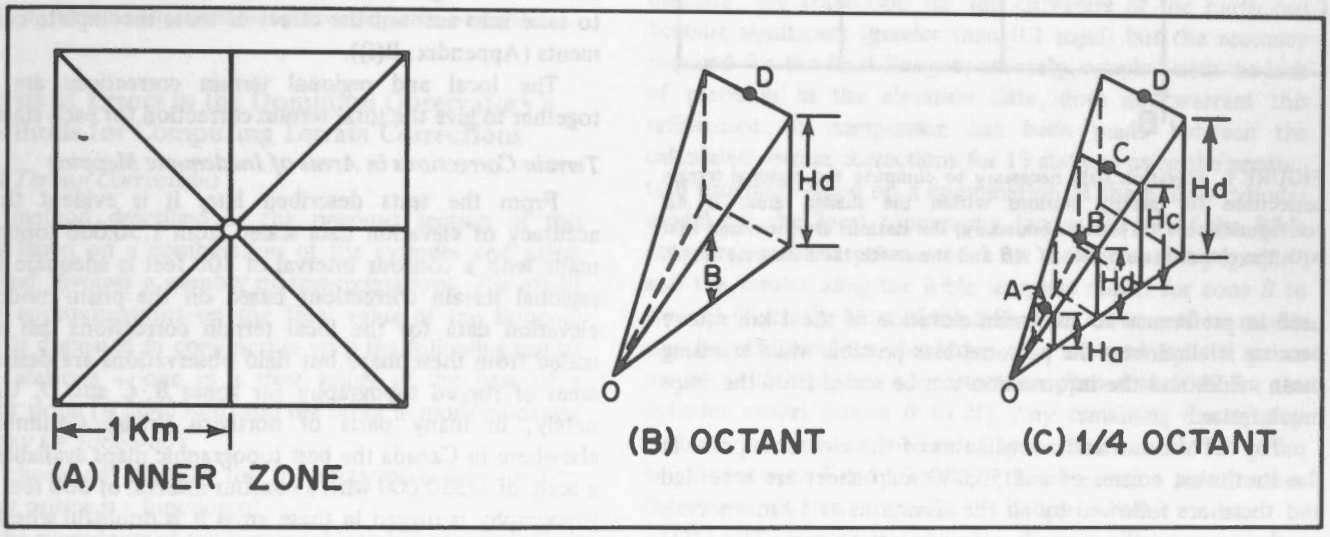

FIGURE 6. Division of inner terrain correction zone into octants (after Kane, 1962).

In the mountainous Cordilleran region of British Columbia the same accuracy of 0.1 mgal can be maintained for the observed gravity value and, by using positions and elevations provided by topographic survey parties, the effect of errors in the latitude of the station can be reduced to 0.05 mgal (100 m) and in the elevation to 0.7 mgal (3 m). Therefore, for the accuracy of Bouguer anomalies in the Cordilleran region to be comparable to the 2 mgal accuracy of the anomalies elsewhere in Canada, the terrain correction must be accurate to 1.25 mgal.

From the various tests described in the next section of this report it can be seen that in areas where the topographic data are scaled from 1:50,000 maps (or better), and the resulting terrain correction is less than 12.5 mgal, the terrain correction will probably be within 10 per cent of its true value. Under these conditions the accuracy of a Bouguer anomaly in the Cordilleran region will be comparable to that for an anomaly in the Prairie and Shield areas of Canada.

Regional Terrain Corrections

The elevation data for the prism model used for the regional terrain calculations are scaled from 1:50,000 topographic maps at the intersections of the 1-km Universal Transverse Mercator (UTM) grid. The decision to use this grid size was based on the results of the tests to be described later, plus the convenience of using a grid already printed on the maps. Each prism of the model is centred on a grid intersection and the elevation of its upper surface is taken to be the contour value at the intersection point. This system was

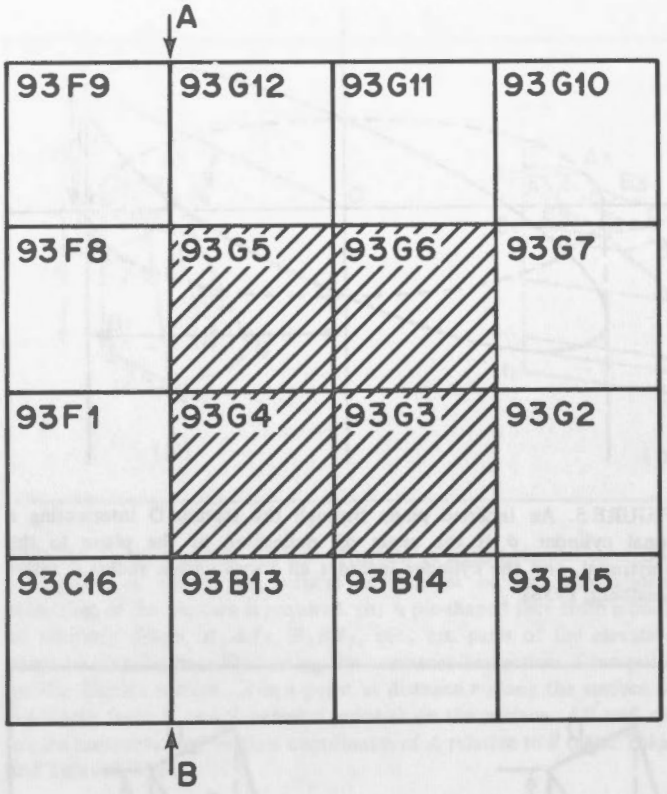

FIGURE 7. Elevation data necessary to compute the regional terrain corrections for gravity stations within the shaded area. If *AB* corresponds to a UTM zone boundary, the stations are processed first with the elevation data east of *AB* and then with the data west of *AB*.

used in preference to the mean elevation of the 1-km square because it eliminates the personal bias possible when assessing mean values and the information can be scaled from the maps much faster.

The UTM zone and coordinates of the elevation point in the southwest corner of a 1:50,000 map sheet are recorded and these are followed by all the elevations at 1-km intervals on the same northing, reading from west to east. The UTM zone and coordinates of the elevation point 1-km north of the first value is then noted and these are followed by all the elevations on this northing. This continues to the top of the map sheet and after the elevations have been transferred to punched cards they are marked with the map sheet number and stored as a 'block'. When the area covered by a 1:250,000 map sheet has been completed (sixteen 1:50 000 maps), the coordinates of all the elevations which have been recorded on the punched cards are plotted and the result checked for missing or extra elevation points (see Program Specifications, Appendix A(i)). These are most likely to occur along the boundaries of the 1:50,000 map sheet blocks. The data on the cards are then listed and scanned for gross errors in the values.

The organization of the elevation data for computing regional terrain corrections is illustrated in Figure 7. The computer program (Appendix: A(ii)) reads in all the elevation data and then the number, coordinates and elevation of the first gravity station. The program checks all the elevation data and computes the gravitational attraction for each prism within an area 50 X 50 km centred on the station. The total attraction of these prisms, less that due to those in the 5 X 5 km area in the immediate vicinity of the station, is then printed. This procedure is repeated for all the gravity stations in the shaded area of Figure 7.

Local Terrain Corrections

Based on the results of the tests outlined later in this report it was decided that the most efficient way of determining the terrain correction due to the topography within the 5 X 5 km area around the station was to use Bible's version of the segmented hollow cylinder model. The mean elevations for zones *B*, *C* and *D* are based on field observations whenever possible and the elevations for zones *E* to *I* are estimated from 1:50,000 topographic maps. For zones *H* and *I* the mean elevation of that section of each compartment falling within the 5 X 5 km area is used in preference to the mean elevation for the complete compartment. The computer program used instead of the tables to compute the contribution of each segment of the hollow cylinder has been modified to take into account the effect of these incomplete compartments (Appendix: B(i)).

The local and regional terrain corrections are added together to give the total terrain correction for each station.

Terrain Corrections in Areas of Inadequate Mapping

From the tests described later it is evident that the accuracy of elevation data scaled from 1:50,000 topographic maps with a contour interval of 100 feet is adequate for the regional terrain corrections based on the prism model. The elevation data for the local terrain corrections can also be scaled from these maps but field observations are desirable in areas of rugged topography for zones *B*, *C* and *D*. Unfortunately, in many parts of northern British Columbia and elsewhere in Canada the best topographic maps available are at a scale of 1:250,000 with a contour interval of 500 feet. If the topography is rugged in these areas it is doubtful whether the terrain corrections will be within 10 per cent of their true value as required earlier in this section.

In such areas of inadequate mapping Bible's version of the hollow cylinder model is used for the complete terrain correction and a computer program is used to calculate the contribution of each segment from whichever of *B*, *C*, *D* or *E* is the first zone to zone *M* (approximately 22 km radius). The complete program for this calculation is described in Appendix: B(ii).

Terrain Corrections for Underwater Gravity Stations

For gravity measurements made underwater a modified reduction procedure is used to obtain the Bouguer anomaly (Stacey, *et al.*, 1969). Bible's version of the hollow cylinder model is used to represent the topography and the height of the land segments (area 1, Figure 8). It is estimated from the best available topographic maps and is relative to the station elevation, although the observation point is below sea level. The effect of the land covered by water (area 2) and of the

water (area 3) is assessed in the same way using nautical charts and a density of 1.64 g/cm^3 for area 2 (2.67 − 1.03 = 1.64 g/cm^3) and 1.03 g/cm^3 for sea water. After the effect of all the land and water above the observation point has been removed, the underwater gravity value is corrected to sea level assuming the normal free air gradient to give the free air anomaly. The Bouguer anomaly is found by adding to this value the effect of an infinite horizontal slab of density 2.67 g/cm^3 and thickness equal to the depth of the instrument below sea level.

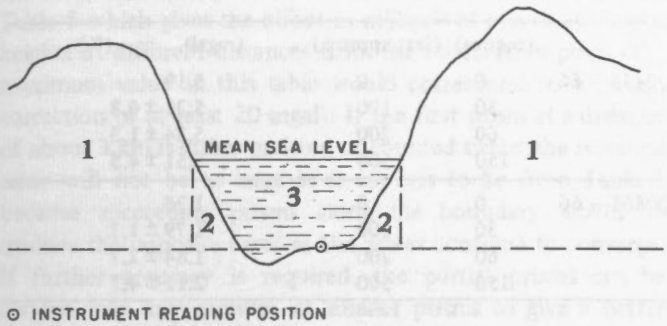

FIGURE 8. Terrain corrections for underwater gravity observations.

Analysis of Errors in the Dominion Observatory's Methods for Computing Terrain Corrections

Regional Terrain Corrections

The method described in the previous section of this report is based on a combination of the cylinder and prism models and involves a number of approximations. The effect of these approximations on the final value of the Bouguer anomaly is discussed in conjunction with the following results for two stations – one in a river valley at the base of a 3000-foot slope (# 30453-66) and the other in more moderate topography (# 30865-66).

The choice of the size for the rectangular grid used to define the prisms is a function of

(a) the ruggedness of the topography to be represented,

(b) the distance of each prism from the observation point,

(c) the accuracy to which the elevation of the prism can be estimated,

(d) the time required to estimate and record the elevation data in a form suitable for a computer, and

(e) the final accuracy required for the Bouguer anomaly.

Taking into account these considerations it was decided to try to utilize the 1-km UTM grid, which appears on all the recently published 1:50,000 topographic maps in Canada, as a basis for the prism model.

One square kilometre from this grid covers approximately the same area as a compartment in zone *H* of the Bible graticule. The inner radius of zone *H* is 1529 m, so if the mean elevation of the 1-km square prisms is used to represent the topography at distances greater than 1500 m from the observation point, the resulting model will be more accurate than that given by Bible's cylinder model. In the system outlined earlier the distance from the observation point (which can be anywhere within the limits of the central 1-km block) to the centre of the first prism of the model can vary between 2.5 and 3.5 km. Also, the elevation at the intersections of the UTM grid is assumed to be representative of the 1-km prism centred on this point. This elevation is probably not as realistic as the mean value but it is easier, and therefore quicker, for an unskilled person to grasp and it does not permit the personal bias which can arise when estimating mean elevations, to effect the results. In the tests which follow it is assumed that the grid size is 1-km and that an area 5 X 5 km (corresponding to a radial distance of approximately 3 km) around the station has been omitted from the terrain model.

Having chosen an inner limit for the prism model, the outer limits can now be established, and the results for different sized areas are summarized in Table 1. The rectangular 45 X 45 km area is slightly larger than that covered by the circular Bible template (outer *M* zone radius 21.9 km). The area used in the production program is 50 X 50 km and probably includes at least 95 per cent of the terrain correction outside the 5 X 5 km area around the station. Beyond this distance, the correction for the curvature of the Earth can become significant (greater than 0.1 mgal) but the accuracy required for the final Bouguer anomaly, coupled with the lack of precision in the elevation data, does not warrant this refinement. A comparison has been made between the calculated terrain corrections for 13 stations using the production programs based on a combination of the hollow cylinder model for the local topography (zones *B* to *I* of the Bible template) and the prism model for the regional topography, and the results using the Bible template model for zone *B* to zone *M* (Table 2). Most of the difference between these results can be attributed to the larger area covered by the prism model – 2500 square kilometres as opposed to 1647 for the cylinder model (zones *B* to *M*). Any remaining discrepancy probably arises from the use of spot elevations for the prism heights between 2 and 5 km from the observation point, rather than the mean elevations as in the hollow cylinder model.

Table 1

The change in contribution to the total terrain correction as the area included in the prism model increases. The milligal values have been expressed as a percentage of the contribution of the 45 X 45 km model

Station Number	Area Included in Prism Model (less the 5 X 5 km area around the station)	Contribution of Prism Model to Terrain Correction	
	(km)	(mgal)	(%)
30453 – 66	15 X 15	3.88	62
	25 X 25	5.19	83
	35 X 35	5.82	93
	45 X 45	6.23	100
30865 – 66	15 X 15	1.41	73
	25 X 25	1.78	92
	35 X 35	1.87	96
	45 X 45	1.94	100

The effect of errors in the elevation of the prisms has been assessed using a Monte Carlo technique developed by Nagy (1966). The terrain correction calculations for stations 30453-66 and 30865-66 have been made using different standard deviations for the prism elevations and each calculation has been repeated 30 times to ensure that a meaningful sample has been used. The area included in these calculations is 25 X 25 km (approximately 80 per cent of the total correction), which is sufficient to illustrate the accuracy of the procedure. The results are given in Table 3 and it can be seen that the terrain effect is insensitive to random errors in the elevation data. This is probably because the mean elevation of the model does not change significantly in this type of test.

More efficient use of the computer can be made by approximating the gravitational attraction of prisms beyond a certain distance from the station, which subtend less than a certain angle at this point to that of a vertical line mass. The expression for the gravitational attraction in this case is very much shorter than the solution of the full integral for a prism and the effect of this approximation can be assessed from the results in Table 4. In the production program the line mass is used for prisms at distances greater than 15 km, provided that the angle subtended at the station is less than 0.5°. This can reduce the number of prisms in the model from 2500 to 700 plus those beyond 15 km that subtend an angle greater than 0.5° and result in a saving of up to 50 per cent in computing time without changing the computed terrain correction values by more than 0.2 mgal.

Table 2

Terrain corrections using the hollow cylinder model (outer radius 21.9 km) and a combination of the cylinder model for the local topography and the prism model for the regional model. The prism model covers an area 50 X 50 km with the 5 X 5 km area around the station omitted

Station Number	Elevation	Terrain Correction: Cylinder Model for Local and Regional Topography	Terrain Correction: Cylinder Model for Local Topography and Prism for Regional	Difference (Percentage of Cylinder Plus Prism Model)
	(feet)	(mgal)	(mgal)	
4075–68	3587	8.43	8.64	2.4
4140–68	5218	18.15	18.43	1.5
4141–68	5491	9.03	10.34	12.7
4145–68	5828	18.01	19.04	5.4
4146–68	6594	18.38	19.89	7.5
4148–68	7041	15.23	16.80	9.3
4149–68	7008	11.26	12.13	7.2
4151–68	6680	6.04	6.44	6.2
4152–68	7422	15.50	15.94	2.8
4153–68	8375	16.48	17.28	4.6
4155–68	7511	18.90	20.50	7.8
5077–68	3327	6.87	7.29	5.8
9021–68	2298	1.98	2.75	28.0

Table 3

The effect of elevation errors on the contribution to the terrain correction due to a prism model 25 X 25 km, with the 5 X 5 km area around the station omitted. The standard deviation of the results is expressed as a percentage of the mean anomaly after repeating the calculation 30 times with the same standard deviation for the elevation data

Station Number	Standard Deviation of the Elevation Data		Contribution of Prism Model to Terrain Correction	
	(metres)	(feet approx.)	(mgal)	(%)
30453 – 66	0	0	5.19	
	30	100	5.21 ± 0.8	
	60	200	5.24 ± 1.3	
	150	500	5.51 ± 4.5	
30865 – 66	0	0	1.78	
	30	100	1.79 ± 1.7	
	60	200	1.84 ± 2.7	
	150	500	2.11 ± 4.7	

Table 4

The change in terrain correction for station number 30453–66 when using the line mass approximation for the contribution of prisms beyond a certain distance (radius) which subtend less than a certain angle at the station. The area included in the prism model is 45 X 45 km, with the 5 X 5 km area around the station omitted. If the complete expression for the gravitational attraction of a prism is used throughout, the terrain correction is 6.23 mgal

Angle	Radius (kilometres): 5		10		15	
(degrees)	(mgal)	(line mass)	(mgal)	(line mass)	(mgal)	(line mass)
1	6.21	513	6.22	466	6.22	374
2	6.05	962	6.07	896	6.10	740
3	5.68	1348	5.74	1262	5.85	1048
5	4.44	1799	4.81	1658	5.36	1315
7	3.46	1897	4.43	1706	5.35	1316
10	2.41	1938	4.38	1710	5.35	1316

Table 5

The gravitational attraction (mgal) of a 1-km square prism of different elevations at various distances from the observation point

Prism Elevation Relative to Station Height (metres)	Horizontal Distance (km) from Station Station to Centre of Prism: 2.5	5.0	7.5	10.0
30	0.001	–	–	–
150	0.014	0.001	0.001	–
300	0.054	0.005	0.001	0.001
600	0.208	0.025	0.008	0.001
1500	1.057	0.152	0.046	0.019

As explained earlier, the production program does not take into account the convergence of adjacent UTM grids at zone boundaries (Figure 9). If the area of the partial prism includes the centre point at which the elevation has been recorded, the prism is assumed to be complete, and if the partial prism does not include the centre point its attraction is omitted from the calculation. This means that in an extreme case an almost complete 1-km area (counting both sides of the boundary) at a distance of 3 km is either omitted or counted twice in the calculation. The magnitude of this error can be assessed from Table 5 which gives the effect in milligals of prisms of various heights at different distances from the observation point (the maximum value in this table would correspond to a terrain correction of at least 20 mgal). If the first prism at a distance of about 3 km is either omitted or counted twice, the resulting error will not be as large as it appears to be from Table 5 because succeeding prisms along the boundary would introduce the opposite error as the zones continue to converge. If further accuracy is required, the partial prisms can be divided into any number of smaller prisms to give a better approximation to the actual shape of the body. The gravitational attraction of these smaller bodies can be represented by that of a line mass or by the expression for the full prism.

It is possible to consider other tests to assess the accuracy of the terrain correction calculated from the prism model as outlined here, but the authors believe that the most important sources of error in the method have been accounted for in the foregoing discussion. It is concluded that errors in the calculated regional terrain correction when the prism model is based on elevation data scaled from 1:50,000 topographic maps and includes an area 50 X 50 km less the 5 X 5 km area around the station, are less than 5 per cent of the computed value for the correction.

Local Terrain Corrections

Bible's (1962) version of the segmented hollow cylinder model is used to represent the topography within the 5 X 5 km area around the observation point. The graticule is centred over the station and the mean elevation of each compartment is estimated either from field observations or from the best available topographic maps. In the case of the partial compartments in zones *H* and *I* about 2.5 km from the station, the mean elevation of that part of the compartment which falls within the 5 X 5 km area is used. A computer program is used to calculate and sum the contribution of each compartment to the terrain correction. The compartments in zones *H* and *I* are divided into 100 smaller units and the contribution of only those subcompartments which fall within the 5 X 5 km area is taken into account. Various ways have been devised to calculate the contribution of these subcompartments. The simplest approach is to calculate the effect of the complete compartment as usual and then take a percentage of this value (equivalent to the number of subcompartments falling within the 5 X 5 km area) and add it to the terrain correction at the centre of the graticule. Alternately, the contribution of each of the subcompartments falling within the 5 X 5 km area can

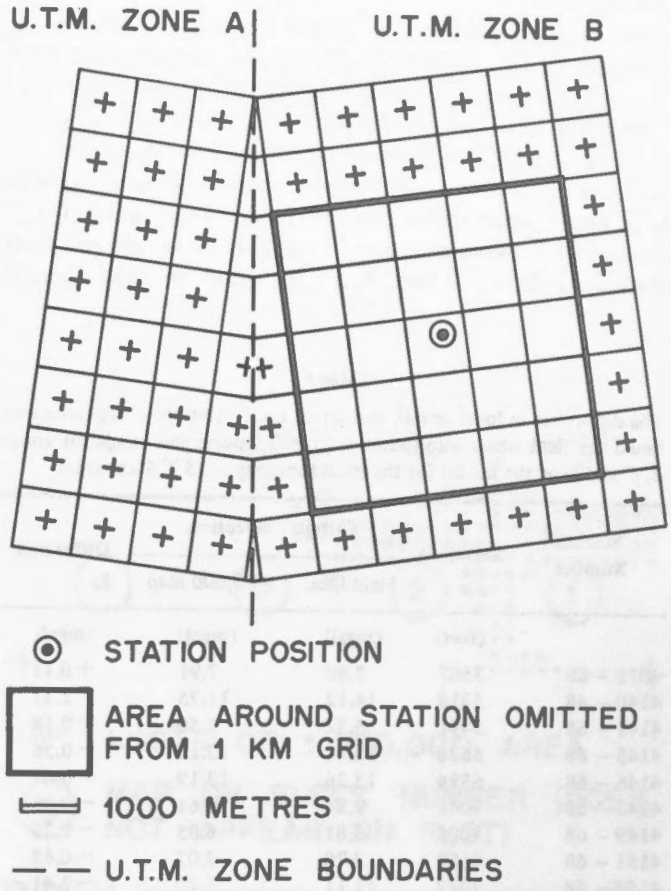

FIGURE 9. Convergence of the UTM grid at a zone boundary.

be approximated to that of a point or line mass. Although the line mass is mathematically the best approximation to the actual gravitational attraction of a vertical prism, the alternatives were considered in an endeavour to reduce the computing time for each station. Tests on 33 stations showed that the point mass gave a total terrain correction (local and regional effects) 0.8 per cent higher on average and the percentage method gave results 1.4 per cent lower. The time saved in each case was negligible so the production program is based on the line mass approximation.

Whenever possible the elevations for zones *B*, *C* and *D* are based on field observations made when the gravity station is occupied because the 1:50,000 topographic maps cannot be interpreted in sufficient detail for these zones. This is evident from Table 6 which shows that when the topographic model is prepared from the 1:50 000 maps the terrain correction is generally underestimated. Stations 4140-68 and 4152-68 have been checked and the large differences can be accounted for by pronounced topographic changes evident in the field observations but not discernable on the 1:50,000 maps. The standard deviation for these results is 1.25 mgal and the mean value for the 13 stations using the values based on the field observations is 8.47 mgal. The standard deviation represents approximately 15 per cent of this value. If the results in the second column for stations 4140-68 and 4152-68 are omitted

on the assumption that the gravity observer would estimate the elevations for zones *B*, *C* and *D* in such extreme cases, then the standard deviation becomes 0.40 mgal, which is only 5 per cent of the mean terrain correction.

The estimation of mean elevations can be subject to personal bias so the local terrain corrections for some stations have been calculated by four different people (Table 7). The differences between the mean terrain correction value for each station in Table 7 have been calculated and the average standard deviation is 0.50 mgal. The average local terrain correction for the 13 stations is 8.39 mgal and the standard deviation represents approximately 6 per cent of this value. The average differences from the mean value for each station have been calculated for each person and are +0.08, −0.11, +0.07 and −0.04 mgal, respectively. These values are well within the standard deviation, suggesting that any personal bias in selecting the elevation data for the local terrain corrections is negligible.

Assuming the elevations for zones *B*, *C* and *D* are based on field observations when the topography close to the station is extremely rugged, it is concluded that the errors in the local terrain correction will generally be less than 8 per cent of the computed value.

Terrain Corrections in Areas of Inadequate Mapping

The topographic information is considered to be inadequate if 1:50,000 or larger scale maps are not available for the area within 2.5 km of the station and 1:250,000 or larger scale maps for the terrain beyond this distance. The terrain corrections for 13 stations have been calculated using the hollow cylinder model to zone *M*. The elevations for zones *B*, *C* and *D* for the first set of values in Table 8 are based on field observations, elevations for zones *E* to *I* have been scaled from 1:50,000 maps and for zones *J* to *M* from 1:250,000 topographic maps. The results have been compared with those obtained when all the elevation data have been scaled from 1:250,000 maps. The mean value of the terrain correction for the 13 stations is 12.61 mgal and the standard deviation is 2.17 mgal or approximately 17 per cent of this value. This suggests that terrain corrections of up to 5 mgal are probably accurate to 1 mgal. The calculation of terrain corrections from

Table 6

The difference in local terrain correction for 13 stations using elevations based on field observations and 1:50,000 topographic maps for zones *B*, *C* and *D* of the model for the local topography (5 × 5 km area)

Station Number	Elevation	Terrain Correction: Field Obs.	Terrain Correction: 1:50,000 Map	Difference
	(feet)	(mgal)	(mgal)	(mgal)
4075 – 68	3587	7.80	7.91	+0.11
4140 – 68	5218	14.12	11.75	−2.37
4141 – 68	5491	5.32	5.50	+0.18
4145 – 68	5828	13.72	13.16	−0.56
4146 – 68	6594	13.26	13.19	−0.07
4148 – 68	7041	9.84	9.61	−0.23
4149 – 68	7008	6.81	6.05	−0.76
4151 – 68	6680	2.70	2.02	−0.68
4152 – 68	7422	11.11	7.70	−3.41
4153 – 68	8375	10.20	10.15	−0.05
4155 – 68	7511	8.77	8.43	−0.34
5077 – 68	3327	6.03	6.24	+0.21
9021 – 68	2298	0.39	0.48	+0.09

Table 7

Variation in the terrain correction for topography within the 5 × 5 km area around the station when the elevation data have been prepared by four different people. The elevations for zones *B*, *C* and *D* are based on field observations and are the same for each model

Station Number	Elevation	Terrain Correction 1	2	3	4
	(feet)	(mgal)			
4075 – 68	3587	7.80	8.41	7.82	8.16
4140 – 68	5218	14.12	11.51	13.70	10.92
4141 – 68	5491	5.32	5.14	5.43	5.52
4145 – 68	5828	13.72	13.69	13.31	13.63
4146 – 68	6594	13.26	15.05	14.76	14.86
4148 – 68	7041	9.84	10.19	9.91	9.97
4149 – 68	7008	6.81	6.78	6.32	6.71
4151 – 68	6680	2.70	2.73	2.63	2.74
4152 – 68	7422	11.11	10.28	10.17	10.78
4153 – 68	8375	10.20	9.00	10.26	9.46
4155 – 68	7511	8.77	9.31	9.13	9.42
5077 – 68	3327	6.03	5.15	6.08	5.89
9021 – 68	2298	0.39	0.35	0.41	0.53

Table 8

Terrain corrections based on Bible's version of the hollow cylinder model with and without elevation data from field observations and 1:50,000 topographic maps for the inner zones

Station Number	Elevation	Elevations for Zones *B*, *C*, *D* from Field Obs., Zones *E* to *I* from 1:50,000 Maps and Zones *J* to *M* from 1:250,000 Maps	Zones *E* to *M* Only and All Elevations from 1:250,000 Maps	Difference
	(feet)	(mgal)	(mgal)	(mgal)
4075–68	3587	8.43	8.47	0.04
4140–68	5218	18.15	14.86	−3.29
4141–68	5491	8.85	9.66	0.81
4145–68	5828	18.01	16.12	−1.89
4146–68	6594	18.39	18.62	0.23
4148–68	7041	15.23	16.82	1.59
4149–68	7008	11.26	10.50	−0.76
4151–68	6680	6.04	5.17	−0.87
4152–68	7422	15.10	9.82	−5.68
4153–68	8375	16.48	15.15	−1.33
4155–68	7511	18.90	20.33	1.43
5077–68	3327	6.87	5.87	−1.00
9021–68	2298	1.79	2.22	0.43

even smaller scale maps has not been attempted because the results would be of little value in mountainous areas such as British Columbia where the terrain corrections are generally larger than 5 mgal.

Summary and Conclusions

A number of methods of computing the terrain corrections for gravity observations in mountainous areas have been described. The technique to be used in a particular case clearly depends on the scale of the topographic maps available and the distance between the gravity stations. The normal procedure for a regional gravity survey where 1:50,000 topographic maps are available and the station spacing is between 10 and 15 km is to represent the local topography within about 2.5 km of the station with a segmented hollow cylinder model and beyond this, to a distance of 25 km, to use a model based on 1-km square vertical prisms.

Each of these prisms is centred on a 1-km UTM grid intersection and its height is taken to be the elevation at the grid intersection. These data are prepared throughout the area without regard to station positions. Then the centre point of each prism is plotted at 1:250,000 to check the coverage and the actual elevations are listed and scanned for gross errors. Once the station positions have been determined in a particular area, the elevation data for this and the surrounding area to a distance of 25 km are read into the computer. The regional terrain correction for an area 50 X 50 km centred on the kilometre square containing the station is calculated for each station in turn using the 1-km prism elevation data. The contribution of the 5 X 5 km area around each station is omitted from the calculation so that a more refined model based on a hollow cylinder can be used close to the observation point.

Bible's (1962) version of the segmented hollow cylinder model is used to represent the topography within the 5 X 5 km area around the observation point. The graticule is centred over the station and the mean elevation of each compartment is estimated either from field observations or from the best available topographic maps. In the case of the partial compartments in zones *H* and *I* about 2.5 km from the station, the mean elevation of that part of the compartment which falls within the 5 X 5 km area is used. The resulting local terrain correction is added to the regional correction based on the prism model to give the total terrain correction. Once the terrain corrections for all the stations in an area have been calculated the results are plotted at 1:250,000 and the corrections are compared with the topography to eliminate gross errors in the calculations.

If the gravity stations are more than 15 km apart, or if there are no 1:50,000 topographic maps for the area of the survey, the Bible version of the hollow cylinder model from zone *B* to zone *M* is used in preference to the combined cylinder and prism model. This is because the extra time required to prepare the data for the prism model cannot be justified under these circumstances. The full cylinder model is also used whenever underwater gravity measurements require terrain corrections.

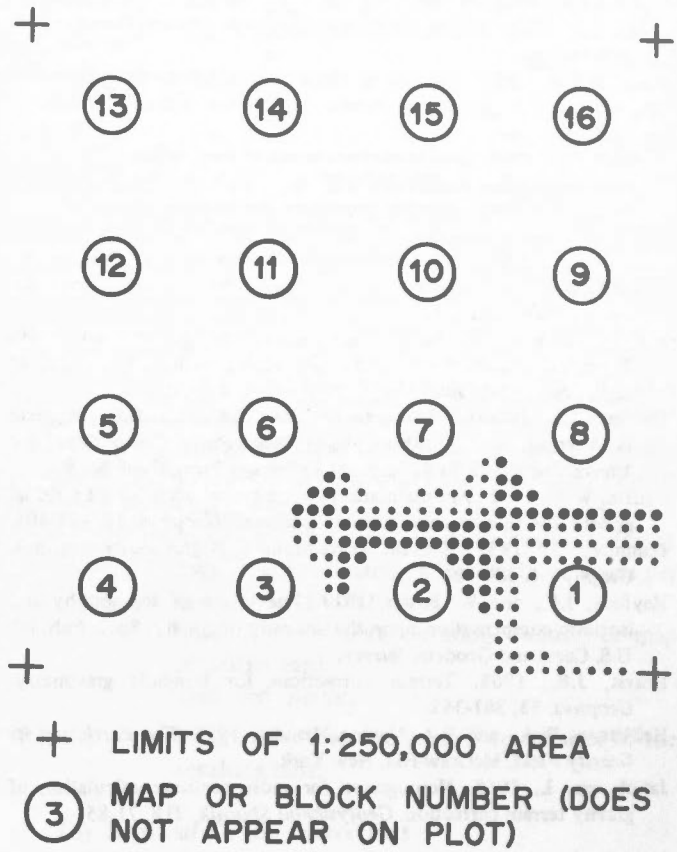

FIGURE 10. General appearance of a plot resulting from the CHECK PLOT program.

As a result of the various tests described in this report, it is believed that the terrain correction for a given gravity station can be estimated to within 10 per cent of its actual value, provided that the elevation data for the topographic model have been taken from 1:50 000 or larger scale maps. This figure appears to hold for both Bible's version of the hollow cylinder model and the combined cylinder and prism method described in this report. When the elevation data are based on 1:250,000 scale maps the error in the terrain correction can increase to approximately 20 per cent of the terrain correction value.

Acknowledgments

The authors wish to express their thanks to Dr. D. Nagy and R.J. Buck of the Gravity Division for their assistance with the computer programming. They also wish to thank all the people who have assisted from time to time with the scaling of the elevation data from the topographic maps. Part of the work was carried out while R.A. Stacey held a National Research Council fellowship.

Bibliography

Beers, L.D., 1965. Square method for determining the terrain correction, using a digital computer. M.Sc. thesis, Ohio State University.

Bible, J.L., 1962. Terrain correction tables for gravity. *Geophys.* 27, 715-718.

Bott, M.H.P., 1959. The use of electronic digital computers for the evaluation of gravimetric terrain corrections. *Geophys. Prosp.* 7, 46-54.

Bullard, E.C., 1936. Gravity measurements in East Africa. *Trans. Roy. Soc.* (Lond.) Ser. A, 235, 445-531.

Chinnery, B.K., 1961. Terrain corrections for airborne gravity gradient measurements. *Geophys.* 26, 480-489.

Collette, B.J., 1965. Charts for determining the gravity effect of two and three dimensional bodies bounded by arbitrary polygons. *Geophys. Prosp.* 13, 12-21.

Ehrismann, W., G. Muller, O. Rosenbach, and N. Sperlich, 1966. Topographic reduction of gravity measurements by the aid of digital computers. *Boll. Geofis. Teor. Appl.* 8, 3-20.

Gimlett, J.I., 1964. A computer method for calculating complete Bouguer corrections with varying surface density. *Computers in the Mineral Industries*, Pt 1, Stanford University Press, Geol. Sc. 9.

Griffin, W.R., 1963. Approximation to the lateral variation of residual gravity due to a frustum of a vertical cone. *Geophys.* 18, 401-405.

Hammer, S., 1939. Terrain corrections for gravimeter stations. *Geophys.* 4, 184-194.

Hayford, J.F., and W. Bowie, 1912. The effect of topography and isostatic compensation upon the intensity of gravity. Spec. Pub. 10, U.S. Coast and Geodetic Survey.

Hearst, J.R., 1968. Terrain corrections for borehole gravimetry. *Geophys.* 33, 361-362.

Heiskanen, W.A., and F.A. Vening Meinesz, 1958. *The Earth and its Gravity Field.* McGraw-Hill, New York.

Jakubcova, I., 1965. Nomograms for more accurate calculation of gravity terrain correction. *Geofysikalni Sbornik.* 218, 71-85.

Kane, M.F., 1962. A comprehensive system of terrain corrections using a digital computer. *Geophys.* 27, 455-462.

Kantas, K., and D. Zych, 1967. Reduction of gravity observations with digital computer. *Pure Appl. Geophys.* 68, 11-18.

Karlemo, B., 1963. Calculation of terrain corrections in gravity studies using the electronic computer. *Geoexpl.* 1, 56-66.

Miller, C.L., and R.A. Laflamme, 1958. The digital terrain model – theory and application. *Photogram. Eng.* 24, 433-442.

Nagy, D., 1966. The prism method for terrain corrections using digital computers. *Pure Appl. Geophys.* 63, 31-39.

Neumann, R., 1962. Contribution au calcul simplifié des corrections de relief a grande distance en gravimétrie. *Geophys. Prosp.* 10, 523-534.

St. John, V.P., and R. Green, 1967. Topographic and isostatic corrections to gravity surveys in mountainous areas. *Geophys. Prosp.* 15, 151-562.

Sandberg, C.H., 1958. Terrain corrections for an inclined plane in gravity computations. *Geophys.* 23, 701-711.

Stacey, R.A., L.E. Stephens, R.V. Cooper, and B.G. Brulé, 1969. Gravity measurements in British Columbia. *Gravity Map Series of the Dominion Observatory* No. 88 - British Columbia coastal area.

Swick, C.H., 1942. Pendulum gravity measurements and isostatic reductions. Spec. Pub. 232, U.S. Coast and Geodetic Survey.

Takin, M., and M. Talwani, 1966. Rapid computation of the gravitation attraction of topography on a spherical Earth. *Geophs. Prosp.* 14, 119-142.

Talwani, M., and M. Ewing, 1960. Rapid computation of gravitational attraction of three dimensional bodies of arbitrary shape. *Geophys.* 25, 203-225.

Winkler, H.A., 1962. Simplified gravity terrain corrections. *Geophys. Prosp.* 10, 19-34.

APPENDIX

Computer Program Specifications

A. Rectangular Vertical Prism Model

(i) *Check Plot for 1-km Elevation Data*

Name: CHECK PLOT

Programmer: R.A. Stacey Last revision: 7 Jan. 1969

Computer: IBM 360/65

Language: Fortran IV - G Core requirement: 200K

Input: Elevation data on cards

Output: Magnetic tape for AEI plotter with one character for each elevation on the cards.

Time: 3.6 sec for each 1:50,000 map sheet and 16 times this for a complete 1:250,000 map sheet area.

Purpose: Elevations (feet) have been scaled from 1:50,000 topographic maps at 1-km intervals on a UTM grid and punched on cards. These cards are read and the coordinates of each elevation are computed and recorded on magnetic tape. These points are then plotted at 1:250,000 by 1:50,000 map sheet or by irregular block, depending on the arrangement of the input data, using a dot (·) and a circle (•) for alternate areas. From these plots elevations that have been omitted or recorded more than once can be identified and the elevation data can be edited accordingly.

Method: (i) Read latitude and longitude limits of 1:250,000 area to be plotted. Note: if either longitude corresponds to a UTM zone boundary, it must be changed by 0.001° to fall in the same zone as the elevation data. The UTM coordinates of the corners of the plotting area are computed and plotted as plus signs (+).
(ii) Read 999 card. This occurs before each block of elevation data and causes the symbol being plotted (either (·) or (•)) to be changed.
(iii) Read elevation header card (UTM zone number, the northing and easting of the first elevation and the grid size – 1000 m). This is followed by the first elevation and succeeding elevations on the same northing at 1000 m intervals eastwards from the header card coordinate. The coordinates of each elevation are computed and, together with the relevant symbol, are stored on the magnetic tape for the AEI plotter. Successive header and elevation cards are read until the next block identifier card is reached and the symbol is changed. A blank card signifies the end of the data has been reached and the program ends. The plotting subroutines were developed by R.J. Buck.

Input: Card 1: Area limits, south and north latitude and east and west longitude. Format 4F10.5.
Card 2: First/next map or block identifier. Format 80A1. 999 in column 1, 2 and 3.
Card 3: Header card giving the UTM zone number, northing and easting of the first elevation (metres × 100), grid size (1000 m). Left adjusted fields of six columns. Format 80A1.
Card 4: Elevation cards, elevations (feet). Twelve left adjusted fields of six columns per card. Format 80A1.
Card 5, etc.: Next elevation, header, or map identifier card.
End card: Blank.

Results: Figure 10 shows the general appearance of the resulting plot.

(ii) *Regional Terrain Corrections*

Name: PRISM MODEL TERRAIN CORRECTIONS (3 × 3 and 5 × 5)

Programmers: D. Nagy and R.A. Stacey
Last revision: 2 Jan. 1969

Computer: IBM 360/65

Language: Fortran IV - G Core: 100K

Input: (i) Elevation data on cards
(ii) Station cards

Output: Station number, terrain correction

Time: 16.5 sec/station for complete prism calculation throughout and approximately 8.5 sec/station when RAD = 15 km and EPS = 0.5°.

Purpose: The elevation at each intersection of the 1-km UTM grid overprinted on 1:50,000 topographic maps has been recorded on punched cards. This program assumes that these elevations represent the height of a rectangular prism (1 × 1 km) centred on each grid intersection and computes the gravitational attraction of all such prisms within 25 km of a gravity observation point, the UTM coordinates and elevation of which have been specified. To permit a more refined representation of the topography near the station than is possible using elevation data at 1-km intervals, the contribution of two areas, 3 × 3 km and 5 × 5 km, with the station contained within the central kilometre square

of each, is removed from the total terrain correction. Program CYLINDER MODEL TERRAIN CORRECTIONS (LOCAL ONLY) (Appendix: B(i)) is used to compute the gravitational effect of the topography within these areas.

The original program was written by D. Nagy (1966. The Prism method for terrain corrections using digital computers. *Pure Appl. Geophys.* 63, 31-39) and has since been modified by Stacey and others for the particular problem of computing terrain correction in the Cordilleran region of western Canada.

Method: The first card defines the central meridian (CM) of the UTM zone containing the elevation data, the distance (RAD) from the station beyond which an approximate expression is used for the attraction of each prism if it subtends less than a certain angle at the station (also specified on this card (EPS)). This is followed by a print control (IREG) and the number of rows and columns of the prism model north, south, east and west to the limits of the area to be included in the terrain correction for each station (IMAX, IMIN, JMAX, JMIN). If this area extends over two UTM zones, the elevation data from each zone must be processed separately and the results added together later. The program transforms the station coordinates automatically into the relevant zone.

The elevation data, which have been scaled from 1:50,000 topographic maps on a 1-km grid, are read by map sheet or by irregular shaped block, depending on the arrangement of the data. Within each map sheet or block a header card defines the northing and easting of the most westerly elevation for a given northing and succeeding cards give the elevations at 1-km intervals on this northing in an easterly direction. These data are stored on disc.

When the elevation data have been read and stored the first/next station card (station number, elevation and latitude and longitude or UTM coordinates) is read. The elevation data are read from the disc and the contribution of each prism within the area relevant to the station is computed and summed. The elevation of each prism is the difference between the height at the centre of the prism and the station elevation, and the assumed density is 2.67 g/cm^3. The contribution of the prisms falling within the 3 X 3 km and 5 X 5 km areas around the station are summed separately and later removed from the total terrain correction for that station.

Partial prisms for which there are elevations available in the vicinity of a converging UTM zone boundary are assumed to be complete and their contribution is calculated in the normal manner. Incomplete prisms under the same circumstances for which there is no elevation on the maps are ignored. At distances greater than 2.5 km from the station the maximum error this generally introduces is less than 0.1 mgal.

Input: Card 1: CM, RAD, EPS, IMIN, IMAX, JMIN, JMAX

Format 8X, F3.0, F5.0, 5X, F5.3, 5I3

CM in degrees longitude, RAD metres, EPS degrees, IMIN, etc., are the index values equivalent to kilometres south, north, west and east from the station.

Card 2: Header card giving UTM zone number, northing and easting of the first elevation (metres X 10^2), grid size (1000 m). Left adjusted fields of six columns. Format 80A1.

Card 3, etc.: Elevation cards (elevations in feet above sea level). Twelve left adjusted fields of six columns per card. Format 80A1. Continues to next header card and sequence of elevation cards.

End card for elevation data: Blank.

Station cards: Station number, elevation (feet) and latitude and longitude or UTM coordinates, UTM zone number.

Format I7, 20X, I5, 2X, F6.0, F5.0, 33X, I2

End card: Blank, terminates program

Results: Each row of prisms with equal northing is processed in turn. If any prism in this row falls within the area around the station defined by IREG, the station number, its elevation and UTM coordinates are printed together with the gravitational attraction of each prism within the area. When all the elevation data have been processed for all the stations, the station numbers are listed together with the total terrain correction for each, the total correction minus the contribution of the prisms in the 3 X 3 km area, and the total minus the effect of the prisms in the 5 X 5 km area around the station.

B. Hollow Cylinder Model

(i) *Local Terrain Corrections*

Name CYLINDER MODEL TERRAIN CORRECTIONS (LOCAL ONLY)

Programmers: R.A. Stacey and L.E. Stephens
Last revision: 1 July 1969

Computer: IBM 360/65

Language: Fortran IV - G Core requirements: 100K

Input: Station number, elevation and UTM coordinates followed by elevation data for hollow cylinder model.

Output: Station number and terrain corrections for the 3 X 3 km and 5 X 5 km areas around the station position.

Time 2.63 sec/station

Purpose: This program computes the terrain effect due to that part of a segmented hollow cylinder model centred on the gravity station which falls within either an area 3 X 3 km or an area 5 X 5 km. These correspond to the areas omitted from the results of program PRISM MODEL TERRAIN CORRECTIONS (3 X 3 and 5 X 5). Bible's version of the hollow cylinder model is used to represent the topography in these areas (Bible, J.L., 1962. Terrain correction tables for gravity. *Geophys.* 27, 715-718.)

Method: If the mean elevations of zones *B*, *C* and *D* have been estimated in the field relative to the station elevation, the values are preceded by a minus sign; otherwise, the mean elevations of all the compartments to zone *I* of the Bible template are estimated from the 1:50,000 topographic maps. If the elevation relative to that of the station of any of the compartments in zones *B*, *C* and *D* is zero, the elevation of the station is recorded. The program reads the station number, elevation and UTM coordinates and calculates the limits of the 3 X 3 km and 5 X 5km areas around the station. The contribution to the terrain correction of zones *B* to *F* inclusive are determined and then the compartments in zones *G*, *H* and *I* are each divided into 100 subcompartments. If the centre of one of these subcompartments falls within the relevant rectangular area its contribution is approximated to that of a vertical line mass and added to the total terrain correction. If the centre of the subcompartment falls outside the rectangular area its contribution is ignored. The elevation of all the compartments is taken relative to the station elevation and the density used is 2.67 g/cm^3.

Input: Card 1: Station number, elevation (feet), UTM northing, easting and zone number. Format I7, 20X, I5, 2X, F6.0, F5.0, 33X, I2.
Cards 2 and 3: Elevations for zones *B* and *C*. Format 4F5.0.
Card 4: Elevations for zone *D*. Format 8F5.0.
Cards 5 to 9: Elevations for zones *E* to *I*. Format 16F5.0.
Card 10: Either next station card or blank end card to terminate calculation.

Output: The station number, the terrain correction due to the 3 X 3 km area and the terrain correction due to the 5 X 5 km area.

(ii) *Complete Terrain Corrections*

Name: CYLINDER MODEL TERRAIN CORRECTIONS (COMPLETE)

Programmer: R.A. Stacey Last revision: 2 Jan. 1969

Computer: IBM 360/65

Language: Fortran IV - G Core requirement: 100K

Input: Station number and elevation followed by elevation data for hollow prism model.

Output: Station number and terrain correction

Time: 0.23 sec/station

Purpose: Bible's version of the segmented hollow cylinder model is used to represent the topography within approximately 22 km (zone *M*) of the gravity observation point. Under ideal circumstances the mean elevations for zones *B*, *C* and *D* are based on field observations and the elevations for zones *E* to *I* inclusive are estimated from 1:50,000 topographic maps. The mean elevations for zones *J* to *M* can be estimated with sufficient accuracy from 1:250,000 maps. If only 1:250,000 maps are available it is generally impossible to determine the elevations for zones *B*, *C* and *D* so the basic program has been modified to permit the first zone of data to be either *B*, *C*, *D* or *E*. (Reference: Bible, J.L., 1962. Terrain correction tables for gravity. *Geophys.* 27, 715-718.)

Method: The first card gives the station number and elevation and a number between 1 and 4 which indicates which of *B*, *C*, *D* and *E* is the first zone of data. The elevation cards follow zone by zone and the terrain correction for each compartment is calculated and added to the terrain correction for the station.

Input: Card 1: Station number, elevation and initial zone number. Format I10, F10.0, I10
Card 2, etc.: Elevation data, one zone / card. Format 16F5.0.
End card: 999 in columns 8, 9 and 10

Output: The station number and its elevation followed by the number indicating which of *B*, *C*, *D* and *E* was the first zone and the terrain correction.