CANADA

DEPARTMENT OF
ENERGY, MINES AND RESOURCES
MINES BRANCH
OTTAWA

THE HYDROCRACKING OF RESIDUAL OILS AND TARS 1: THE EFFECT OF FEED DILUTION ON THE THERMAL HYDROCRACKING OF ATHABASCA BITUMEN

E. C. McCOLGAN, R. G. DRAPER AND B. I. PARSONS

FUELS RESEARCH CENTRE

SEPTEMBER 1971

Research Report R 246 Price 50 cents

© Crown Copyrights reserved

Available by mail from Information Canada, Ottawa,
and at the following Information Canada bookshops:

HALIFAX
1735 Barrington Street

MONTREAL
1182 St. Catherine Street West

OTTAWA
171 Slater Street

TORONTO
221 Yonge Street

WINNIPEG
393 Portage Avenue

VANCOUVER
657 Granville Street

or through your bookseller

Price: 50 cents Catalogue No. M38-1/246

Price subject to change without notice

Information Canada
Ottawa, 1972

Mines Branch Research Report R-246

The Hydrocracking of Residual Oils and Tars

I: The Effect of Feed Dilution on the Thermal Hydrocracking of Athabasca Bitumen

by

E. C. McColgan*, R. G. Draper** and B. I. Parsons***

ABSTRACT

The paper describes recent work at the Fuels Research Centre on the development of a hydrocracking process for upgrading heavy fuel oils and tars. Elements of hydrogenation and thermal cracking processes have been combined in a continuous flow system to pretreat the residuum and generate distillable streams more amenable to secondary catalytic hydrogen refining. The oil is heated slowly in the presence of hydrogen at 1000 psi, pumped once through a pipe reactor (without benefit of conventional catalysts), then separated into distillable and undistillable fractions. If properly regulated, sufficient hydrogenation occurs to prevent coke formation and substantially more distillate hydrocarbon is produced than in purely thermal coking. There is evidence to indicate that specific hydrocarbon fractions are acting as hydrogen transfer agents or homogeneous catalysts. A marked improvement in conversion and operability can be attained by diluting the feed material with relatively small quantities of low-boiling gas oils. Conversely, any factor which reduces the concentration of low-boiling hydrocarbon species in the pipe reactor (such as topping the feed or using a high gas flow rate) reduces conversion and enhances coking. The results of experiments made with bitumen from the Athabasca Tar Sands deposits are used to illustrate the numerous factors involved in attaining a balance of the conditions required to promote cracking and to minimize the accumulation of pitch deposits in the reaction system.

---

*Technician, **Section Head, Petroleum and Gas Laboratory and ***Research Scientist, Fuels Research Centre, Mines Branch, Department of Energy, Mines and Resources, Ottawa, Canada.

This report was presented in condensed form as a paper at the 4th Canadian Symposium on Catalysis at the 54th Canadian Chemical Conference and Exhibition of the Chemical Institute of Canada, Halifax, Nova Scotia, June 2nd, 1971.

Direction des mines

Rapport de recherches R-246

L'HYDROCRAQUAGE DES HUILES RESIDUELLES ET DES GOUDRONS

I: L'EFFET DE LA DILUTION D'ALIMENTATION SUR L'HYDROCRAQUAGE THERMIQUE DU BITUME D'ATHABASCA

par

E. C. McColgan*, R. G. Draper** et B. I. Parsons***

RESUME

Ce rapport décrit le travail récent au Centre de recherche sur les combustibles sur le développement d'un procédé d'hydrocraquage pour l'amélioration des huiles lourdes et des goudrons. Des éléments d'hydrogénation et de procédés de craquage thermique ont été combinés dans un système d'écoulement continu pour le traitement préalable du résidu et pour la production des courants distillables plus comptables au raffinage catalytique sécondaire d'hydrogène. L'huile est chauffée lentement en présence d'hydrogène à 1000 livres par pouce carré, pompée une seule fois directement dans un réacteur àtuyau (sans l'aide des catalyseurs ordinaires) puis séparée en fractions distillables et non-distillables. Avec un réglage correct, une hydrogénation suffisante se produit pour éviter la formation de coke et on arrive à plus d'hydrocarbure distillé qu'en cokéfaction purement thermique. Il y a des preuves qui indiquent que les fractions spécifiques d'hydrocarbure agissent comme des agents de transfert d'hydrogène ou des catalyseurs homogènes. Il est possible d'atteindre une amélioration remarquable en conversion et en fonctionnement en diluant la substance d'alimentation avec des quantités relativement petites de gaz-huiles à bas degré d'ébullition. Réciproquement, n'importe quel facteur qui réduit la concentration des espèces d'hydrocarbure à bas degré d'ébullition dans un réacteur à tuyau (tel que le fractionnement de l'alimentation ou l'utilisation d'un écoulement rapide de gaz) réduit aussi la conversion et augmente la cokéfaction. Les résultats d'expériences qui ont été faites avec le bitume des gisements des Sables asphaltiques d'Athabasca sont utilisés pour illustrer les facteurs nombreux impliqués pour obtenir un équilibre des conditions nécessaires pour faciliter le craquage et pour réduire au minimum l'accumulation des dépôts de brai dans le système de réaction.

---

*Technicien, **Chef de Section, Laboratoire du pétrole et du gaz et ***Chargé de recherches, Centre de recherche sur les combustibles, Direction des mines, ministère de l'Energie, des Mines et des Ressources, Ottawa, Canada.

Ce rapport a été présenté sous forme condensée comme dissertation au 4e Symposium Canadien sur la Catalyse à la 54e Conférence et Exposition Chimique du Canada de l'Institut Chimique du Canada, Halifax, Nouvelle Ecosse, le 2 juin 1971.

CONTENTS

PAGE

Abstract i
Résumé ii
Introduction 1
Experimental 3
Apparatus and Procedure 3
Feed Stock and Feed Stock Preparation 5
Analysis of the Products 8
Experimental Results and Discussion 8
Acknowledgements 19
References 20

FIGURES

No.

1. A schematic diagram of the apparatus 4
2. A diagram of the reaction vessel 4
3. The effect of pressure on coke formation 12
4. Massive coke and sludge deposit 13
5. Coke deposits observed at high exit gas rates 18

TABLES

No.

1 Properties of the Bitumen Feed Stock as Received from Great Canadian Oil Sands Ltd. 6
2 Properties of the Topped Feed Stocks 7
3 Properties of the Diluents 7
4 Experimental Results Obtained with the Topped Feed Stocks ... 10
5 Experimental Results Obtained with the Diluted Feed Stocks .. 14
6 The Effect of Liquid Feed and Exit Gas Rate on Conversion ... 17

INTRODUCTION

The following report is the first in a series on the investigation of techniques for hydrocracking residual oils and tars and the production of low-sulphur distillates and fuel oils. The present work is concerned with the thermal, or non-catalytic, hydrocracking process and the effects of feed dilution or feed topping* on conversion and operability.

In many parts of the world recently enacted, or impending, regulations on the permissible concentrations of sulphur dioxide at ground level resulting from stack-gas emissions are rapidly forcing many low-grade residual fuels out of their traditional heating and power generation markets. The situation is serious and will have an important effect on the orderly use and management of the petroleum resource as a whole unless solutions can be found in the near future. The urgency stems from the fact that a refinery must be able to dispose profitably of all the fractions from its crude feed. It isn't practical to stock-pile residuals as a mine operator might stock-pile low-grade ore awaiting new developments in technology. Though there are many other factors involved, marketability "in-total" is an essential requirement for any crude source. Only two markets of any size are available to the residuals:

a) combustion processes, i.e., heat and power, and

b) building and road construction

There are very obvious limits on the amount of tar and asphalt that can be absorbed by the construction industry or in the road system, therefore the emphasis is on the development of new techniques to refine and upgrade the residuals to hold or recapture the combustibles market.

From the standpoint of combustion and the air pollution regulations, the most objectionable contaminant in most of the heavy fuel oils is sulphur. The problem, however, is far greater than the mere occurrence of sulphur would suggest. If sulphur is the only contaminant present, it can be reduced to acceptable limits relatively easily and cheaply by catalytic hydrogenation (1, 2, 3), but in the presence of increasing amounts of such metals as vanadium, nickel and iron, the catalyst is rapidly deactivated and the

*topping means removal of the lower-boiling hydrocarbons

desulphurization process becomes increasingly difficult (and less economically attractive). The reasons for this are inherent in the chemistry of the desulphurization reaction.....some cracking and decomposition is essential for effective desulphurization and the metal contaminants tend to accumulate as a deposit on the surface of the catalyst, thereby poisoning it. A great many attempts have been made to develop better catalysts but metal deposition is difficult to prevent, and progress has been disappointingly slow.

The time honoured method of handling low-grade residuals is by thermal coking. In the coking process, the best of the hydrocarbon matter present in the residual feed is converted into easily refinable, distillable oils and the most refractory material and the associated metals and minerals are concentrated in the coke. At those plants where the coking process is used, the material balance is maintained by burning the coke for local heat and power. However, the same regulations which prevent the burning of sulphur-laden heavy oils will undoubtedly (ultimately) prevent the combustion of the coke, hence "coking" is not a practical solution.

At the Fuels Research Centre, elements of the hydrogenation and thermal cracking processes have been combined in a continuous flow system to pretreat the residuum and generate distillable streams more amenable to secondary catalytic hydrogen refining. The residual oil is heated slowly in the presence of hydrogen at 1000 psi, pumped once through a pipe reactor (without benefit of conventional catalysts) then separated into distillable and undistillable fractions. For the purpose of the present work, the material distilling below 1000°F equivalent temperature at one atmosphere pressure is classed as distillable and the balance as undistillable. When properly regulated, sufficient hydrogenation occurs to prevent actual coke formation and substantially more distillate hydrocarbon is produced than in purely thermal coking.

Initially it was believed that the process was a purely thermal treatment, but there is considerable evidence now to indicate that specific hydrocarbon fractions are acting as hydrogen transfer agents or as homogeneous catalysts. A marked improvement in conversion and operability can be attained by diluting

the feed material with relatively small quantities of low-boiling gas oils. Conversely, any factor which reduces the concentration of low-boiling hydrocarbon species in the pipe reactor (such as topping the feed or using a high gas-flow rate) reduces conversion and enhances coking.

EXPERIMENTAL

The problems associated with continuous thermal processes are largely connected with the accumulation of sludge and coke deposits and the effect of this on the duration of operation before cleaning and maintenance is required. The objective is to produce as much distillable hydrocarbon material as possible (per unit weight of feed) at the expense of the formation of the smallest quantity of pitch. The hydrogen content of the distillate material should be as high as possible to facilitate secondary refining and any mineral matter and problem hydrocarbon containing combined metals such as nickel or vanadium must, of course, be retained in the pitch. To attain the maximum conversion to distillable fuel at the minimum cost, it is necessary to approach operating conditions favouring coke formation without actually attaining them. Obviously, to operate continuously, all the fractions, including the bottoms, must remain predominantly fluid (to facilitate removal) and there can be virtually no accumulation of solid matter anywhere in the system.

Apparatus and Procedure

A schematic diagram of the flow system and an assembly drawing of the reaction vessel are shown in Figures 1 and 2, respectively. The major components of the apparatus and the general method of operation are described in Mines Branch Research Reports R194 and R217 in connection with earlier studies of hydrogen refining (4, 5). The reaction vessel (internal dimensions 1-inch diameter and 12 inches long) was machined from 316 stainless steel and designed for operation up to 10,000 psi at 500°C. The oil feed and hydrogen were pumped in at the bottom of the reactor. The temperature in the reaction zone was measured by means of a thermocouple extending up a well, located centrally in the reactor.

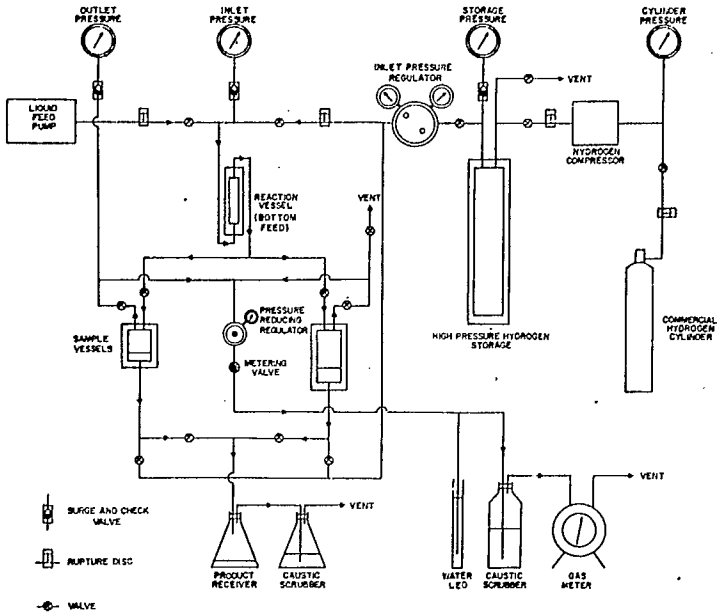

Figure 1 - A schematic diagram of the apparatus.

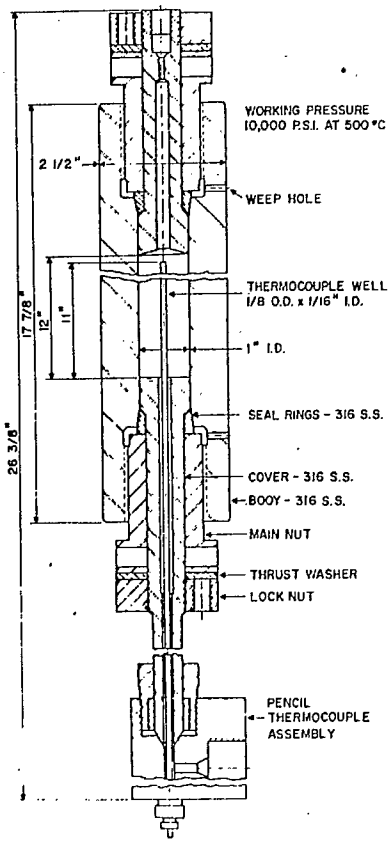

Figure 2 - A diagram of the reaction vessel.

Feed Stock and Feed Stock Preparation

The feed stock used for most of the experimental work was bitumen separated from the Athabasca Tar Sands deposits in northern Alberta. The main lot of material used was supplied to the Mines Branch by Great Canadian Oil Sands Ltd. of Fort McMurray, Alberta. The properties of the bitumen (as received) and the results of the distillation analysis are shown in Table 1. The G.C.O.S. process for separating the bitumen from the bulk of the sand is based upon the Clark Hot Water Separation Process (6). The bitumen from the primary separation stage is diluted with a raw naphtha fraction then centrifuged to remove the finer sand particles. This stream is finally topped to recover the naphtha prior to charging in the coking drums. The bitumen supplied by Great Canadian was equivalent to the charging stock to their coking plant, i.e., centrifuged and topped.

Hydrocracking experiments were made first with this bitumen as received and then with portions of bitumen which had been either further topped to remove more of the light ends or diluted to increase the concentration of low-boiling hydrocarbon material in the feed. Small lots of the bitumen were topped in the laboratory to the equivalent of 500, 600 and 700°F in a 5-liter, crude-oil assay still, and two barrels of bitumen were topped to 500°F in a continuous-type, pilot, vacuum distillation unit at the rate of 12 gallons per hour. The temperatures and pressures used in the distillation and the properties of the feed stocks produced are listed in Table 2.

In all, three diluent fractions were investigated. Two of the diluents were the hydrocarbon cuts distilled from the bitumen in the preparation of the topped feed stocks and the third was a "coker kerosene" fraction prepared from the bitumen by delayed coking at the Great Canadian Oil Sands Plant in Fort McMurray. The properties of the diluents are listed in Table 3. A number of exploratory experiments were also undertaken in which the bitumen was diluted very slightly (0.25 %) with technical-grade tetralin.

If dilution was practiced commercially the most likely source of the diluent fractions would be the liquid product, not the feed material.

TABLE 1

Properties of the Bitumen Feed Stock As Received from Great Canadian Oil Sands Ltd.

Specific gravity 60/60°F	1.000
Ash (wt %) 700°C	0.70
Nickel (ppm)	68
Vanadium (ppm)	189
Pentane insolubles (wt %)	15.83
Benzene insolubles (wt %)	0.90
Carbon Disulphide insolubles (wt %)	0.88
Sulphur (wt %)	4.86
Nitrogen (wt %)	0.38
Oxygen (wt %)	1.0
Viscosity, Kinematic (cSt) at 210°F	85
Viscosity, Kinematic (cSt) at 130°F	1140
Viscosity, Kinematic (cSt) at 100°F	4818

Distillation Analysis

Equivalent Distillation Range at 1 Atm. (°C)	(°F)	Volume %
RT-100	RT-212	0.6
100-200	212-392	1.1
200-250	392-482	4.6
250-275	482-527	7.7
275-332	527-630	7.1
332-421	630-790	18.9
421-532	790-990	14
+532	+990	46

TABLE 2

Properties of the Topped Feed Stocks

Feed Lot Number	Distillation Conditions Temperature (°F)	Distillation Conditions Pressure (mm Hg)	Equiv Topping Temp at 1 Atm. (°F)	Distillate Removed (vol %)
20	as received		-	nil
21*	-	40	510**	5
32	210	1.7	505	9
33	275	1.1	605	20
34	367	1.7	705	29

Feed Lot Number	Specific Gravity 60/60°F	Residuum +990°F (vol %)	Sulphur (wt %)	Kinematic Viscosity (cSt) at 210°F
20	1.000	46	4.86	85.0
21*	1.015	47	5.27	212.2
32	1.017	53	4.78	200.5
33	1.030	61	5.18	527.5
34	1.040	70	4.93	1502

* Distilled in continuous vacuum unit on pilot plant scale.
** Initial boiling point of topped feed.

TABLE 3

Properties of the Diluents

Description of Diluent	Distillation Range Equiv Temp at 1 Atm (°F)	Specific Gravity 60/60°F	Sulphur (wt %)
Fraction from Bitumen	100-500	0.868	1.23
Fraction from Bitumen	500-600	0.894	1.57
Coker Kerosene	310-525	0.858	1.48

Unfortunately, in the present study insufficient sample was available (after provision for the analytical evaluation) for a practical study of diluents separated from the products. The experiments using the "coker kerosene" fraction were undertaken only in an attempt to simulate the type of diluent that would be generated in the thermal hydrocracking process. A larger-scale, pilot plant investigation is currently being planned in which "native" diluent fractions will be compared with the corresponding fractions distilled from the hydrocracked product.

Analysis of the Products

The extent of conversion of residual material to distillable hydrocarbon (up to 990°F atmospheric equivalent) was determined using a modification of the U. S. Bureau of Mines Hempel distillation analysis (7). Conventional ASTM distillation methods were not found to be satisfactory because of the tendency of the bitumen to crack and coke at elevated temperatures. Very briefly the procedure was as follows:

A 100-ml charge was placed in a Hempel distillation flask and distilled rapidly (using a large, fan-like flame burner) in three steps at a) atmospheric pressure, b) 40 mm and c) 1 mm. The distillation was stopped at 300°C at 1 mm, equivalent to 990°F at atmospheric pressure. The final step at 1 mm was calibrated against results obtained with a Podbielniak Equilibrium Flash Still Model 500 (8). Occasionally, even with the small amount of sample used, some difficulty was encountered due to the decomposition of the residuum and gas formation. For this reason the results of the analyses for the heavy oil and residuum fractions have been rounded off to two significant figures.

The sulphur content of the oil samples was determined by an oxygen-bomb technique, ASTM procedure D 129.

EXPERIMENTAL RESULTS AND DISCUSSION

Thermal hydrocracking experiments with the variously prepared feed stocks were run at selected temperatures from 380 to 445°C and at three pressures, 1000, 1500 and 2000 psi. The liquid feed rate used in most of the tests was 160 ml/hr (Liquid Hourly Space Velocity (LHSV) approximately equal to one)

and the hydrogen flow rate was 3500 std cu ft/bbl, respectively. The results are summarized in Tables 4, 5 and 6. Each experiment was run for approximately 7 to 8 hours. In a normal series, with any one of the feed stocks, the tests were run consecutively beginning at the lowest temperature. At the conclusion of each experiment, the reactor was drained (hot), allowed to cool, and then opened for inspection of coke and sludge deposits. If pitch and coke accumulated sufficiently rapidly to plug the reactor, the system was shut down after the first positive indication of operational difficulty, i.e., increasing pressure drop, temperature fluctuation, etc.

At 1000 psi the bitumen, as separated from the sand, can be thermally hydrocracked continuously to a level equivalent to 15 vol % bottoms (+990°F, including clay) without serious risk of accumulating sludge or pitch in either the reactor or the receivers. This corresponds to approximately 67 % conversion of the residuum originally present in the feed compared to between 45 and 50 % conversion by delayed coking (6). It is unlikely that the process (at 1000 psi) could be extended to greater conversion levels by increasing the temperature or by lowering the space velocity without providing sludge and coke removal facilities and/or permitting frequent shutdowns for cleaning and maintenance. At higher pressures, the risk of coke formation (and accumulation) is substantially less, but a slightly higher reaction temperature is required to achieve a comparable level of conversion (4).

At high conversion levels, more operating difficulty was encountered with all of the topped-bitumen feed stocks. A summary of the experimental results obtained with the topped feed stocks is shown in Table 4. At 1000 psi, coke and pitch accumulated rapidly in the system at every attempt to approach a conversion level equivalent to about 67 % of the +990°F residuum present in the feed. The rate of accumulation of pitch deposits was greatest with the bitumen which had been topped to only 500°F. Less pitch accumulated in the system (at 1000 psi) with the lots of feed which had been topped to 600 and 700°F but neither was as free of solids as the "as received" bitumen.

TABLE 4

Experimental Results Obtained with the Topped Feed Stocks

Reaction Conditions			Overall Liquid Product				Conversion	
Feed Lot No.	Hydrogen Pressure (psi)	Temp. (°C)	Specific Gravity 60/60°F	Weight Yield C_4+ (%)	Sulphur Content (wt %)	Residuum +990°F (vol %)	+990°F Residuum* (wt %)	Remarks re: Accumulation of Sludge
20	1000	380	0.996	99.8	4.69	31	33	none
(as re-		399	0.986	99.3	4.48	29	37	"
ceived)		410	0.975	96.8	4.42	24	46	"
		420	0.966	96.0	3.93	19	58	"
		430	0.951	94.5	3.38	15	67	"
		440	-	-	-	-	-	fast
21	1000	410	0.987	99.2	4.36	24	47	none
(+510°F)		420	0.979	97.3	3.70	22	52	"
		430	0.972	96.9	3.50	19	59	slow-in reactor
		440	0.969	-	3.61	~17	-	fast-in reactor
21	1500	395	0.999	99.2	4.43	36	23	none
		410	0.986	96.6	4.06	22	52	"
		430	0.970	94.0	3.58	20	57	trace-in reactor
		440	0.959	-	3.36	~17	-	slow-in reactor
21	2000	390	1.005	100.5	4.51	35	26	none
		410	0.984	100.5	4.30	31	35	"
		430	0.968	94.9	3.48	22	52	"
		440	0.958	92.2	3.33	17	63	"
32	1000	390	1.004	98.6	4.54	34	37	none
(+505°F)		410	0.986	98.9	4.13	28	46	"
		430	0.972	97.3	4.28	20	62	"
		440	-	-	-	-	-	fast-in receiver
33	1000	390	1.013	-	4.67	37	40	none
(+605°F)		410	1.000	99.7	4.78	33	47	"
		430	0.979	95.8	4.27	23	61	"
		440	0.970	90.0	4.05	~18	-	slow-in receiver
		445	0.966	-	3.87	~15	-	slow-in receiver
34	1000	390	1.017	99.0	4.90	38	46	none
(+705°F)		410	1.005	98.6	4.55	35	51	"
		430	0.988	98.0	4.18	27	60	"
		440	0.978	-	4.22	~21	-	slow-in reactor
		445	-	-	-	-	-	fast-in reactor

Exit Gas Rate = 3500 cu ft/bbl LHSV = 1

*mineral matter free

Continuous operation with the topped feed stocks was only possible at the higher pressures, i.e., 1500 and 2000 psi. Photographs of portions of the pitch and coke deposits obtained at 1000, 1500 and 2000 psi with Feed No. 21* are shown in Figures 3 and 4. The deposits shown are the parts attached to the thermocouple well, above a locating "spider" near the top of the reactor. (Pitch gathered on almost all of the surfaces of the reaction vessel . . . . the parts shown were selected for photographing because they were the only parts that could be removed intact from the vessel). At 1000 psi, the coke and pitch accumulated rapidly; the "pod" of coke shown on the end of the thermocouple well was obtained after only 3 hours of operation at 440°C. At 1500 psi, the accumulation of solid matter was still measurable but much less than at 1000 psi and, at 2000 psi, the amount of deposited matter was negligible. The photographs at 1500 and 2000 psi were taken after 20 to 22 hours of operation. A photograph of a massive blockage, typical of that which occurs after 6 hours operation at 1000 psi, is shown in Figure 4.

Taken as a whole, the results indicate that where the bitumen is topped to any significant extent, a minimum hydrogen pressure of 2000 psi is required for continuous operation at residuum conversion levels greater than 62 %. Some minor differences were observed between the lots of bitumen topped in the pilot plant and the laboratory. For example, the solid matter gathered mainly in the reaction vessel in the case of the feed topped in the pilot plant distillation unit but it was distributed between both the reaction vessel and the receivers in the case of the bitumen topped in the laboratory. However, such differences are only of degree and are probably due to differences in the severity of the means of distillation.

In marked contrast to the results obtained with any of the topped bitumens, dilution greatly improved the overall ease of operation and efficiency of the process. (A summary of the experimental results obtained with the various diluents is shown in Table 5). Under most conditions, diluting the feed had the primary effect of reducing the rate of coke and sludge formation in the reaction system. This, in turn, extended the range of permissible operation

*Bitumen topped to 510°F in the pilot plant.

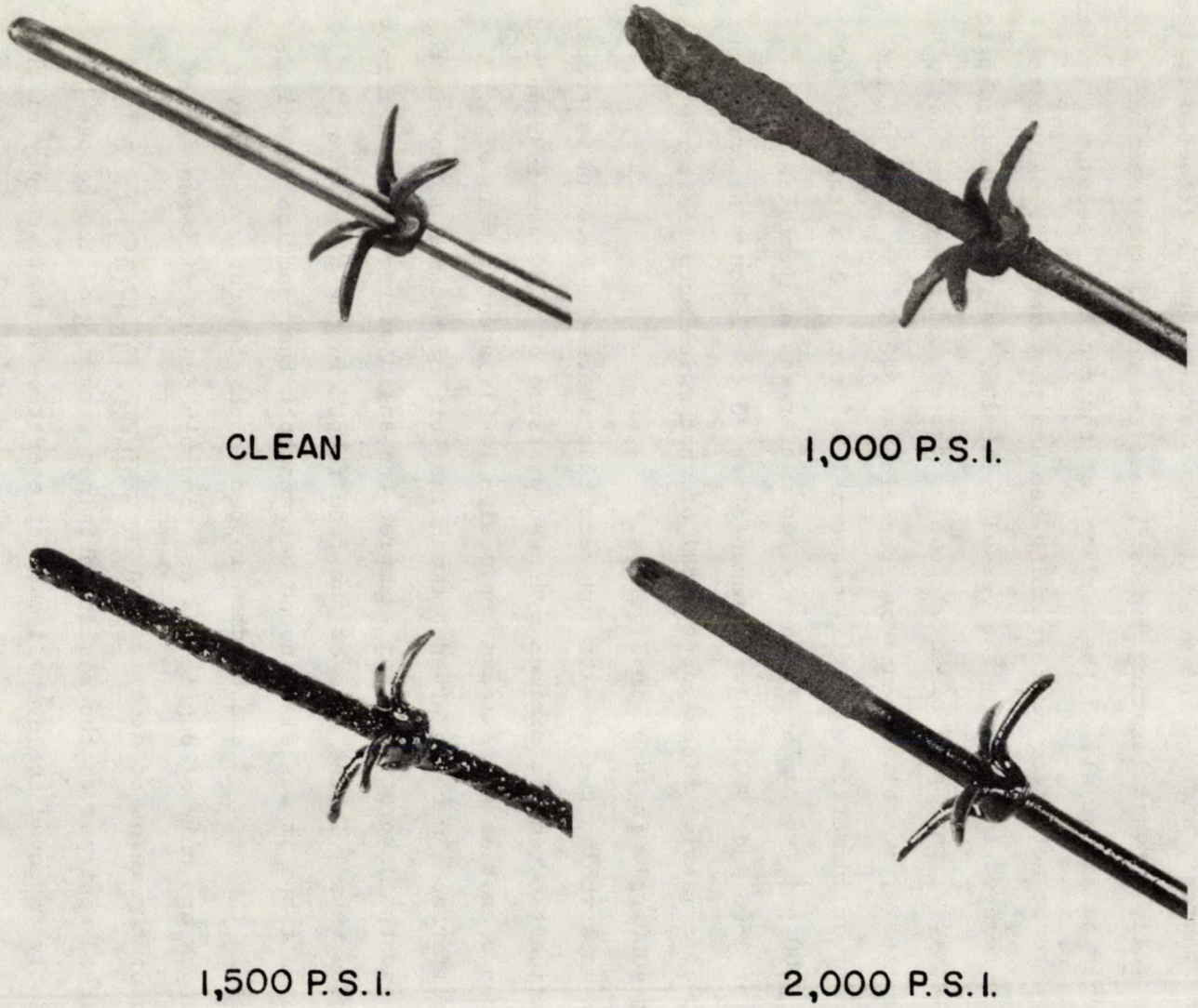

THE EFFECT OF PRESSURE ON COKE FORMATION

Figure 3

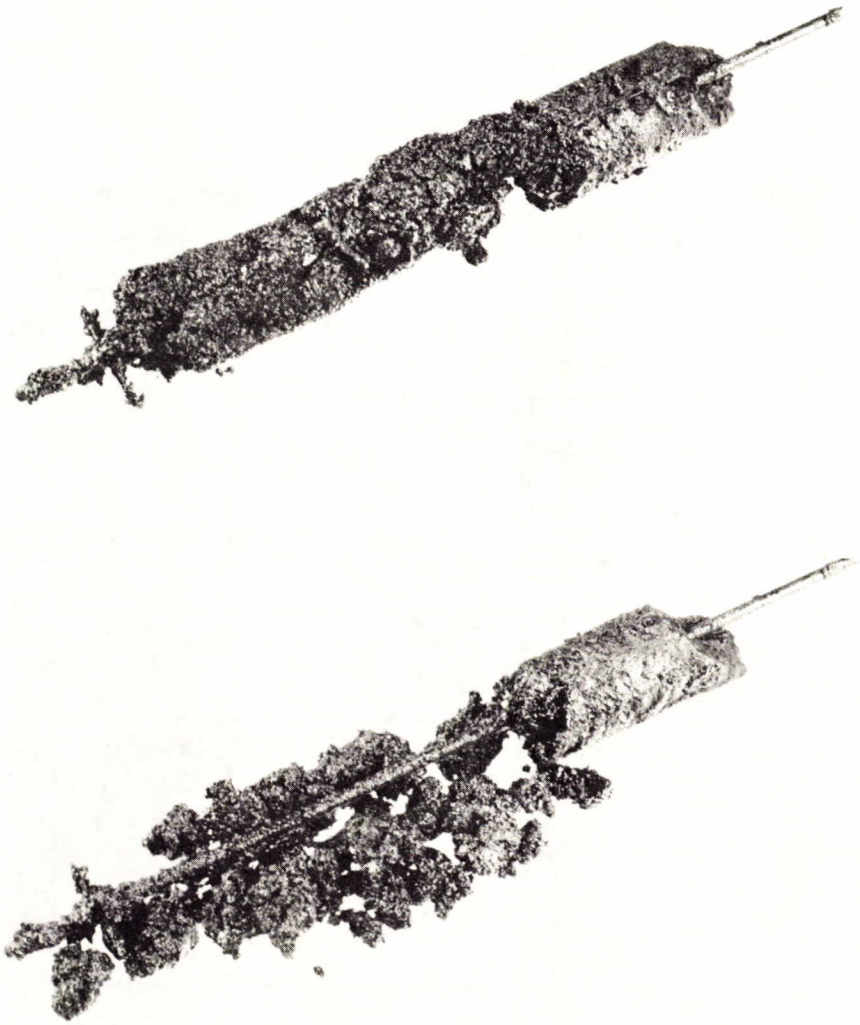

MASSIVE COKE AND SLUDGE DEPOSIT

Figure 4

TABLE 5

Experimental Results Obtained with the Diluted Feed Stocks

Diluent		Reaction	Liquid Product								Conversion	Remarks re:
Boiling Range (°F)	Concentration (Vol %)	Temp. (°C)	Specific Gravity 60/60°F	Sulphur Content (wt %)	Boiling Range - Equiv Temp(°F) at one Atm(vol%) RT - 392	392 - 482	482 - 630	630 - 790	790 - 990	+990	+990°F Residuum* (wt %)	Accumulation of Sludge
As Received		420	0.966	3.93	10.3	9.7	17.6	20.4	23	19	58	none
		430	0.951	3.38	17.5	11.4	21.5	19.6	15	15	67	none
		440	-	-	-	-	-	-	-	-	-	fast
100-500	5	430	0.947	3.10	16.4	13.7	22.7	20.2	15	12	72	none
		440	0.931	2.85	22.4	15.4	23.5	17.7	11	10	77	none
100-500	2.5	430	0.951	3.53	16.6	11.2	20.2	21.0	16	15	66	none
		440	0.937	3.02	21.6	13.9	24.7	17.8	12	10	78	none
500-600	5	430	0.944	3.22	18.4	14.1	23.0	18.5	13	13	70	none
		440	-	-	-	-	-	-	-	-	-	fast
Coker-Kerosene	15	430	0.944	3.45	15.3	16.4	19.5	17.8	16	15	61	none
		440	0.930	3.14	20.0	20.4	21.2	16.4	10	12	69	none
Coker-Kerosene	10	430	0.945	3.47	17.7	14.1	19.8	18.4	15	15	63	none
		440	0.924	3.15	21.2	17.7	20.6	16.5	13	11	73	none
Coker-Kerosene	5	430	0.956	3.59	15.0	12.0	19.7	20.3	17	16	63	none
		435	0.938	3.35	18.9	14.5	19.3	20.3	14	13	70	none
		440	0.927	3.33	23.8	14.4	21.6	17.2	12	11	75	none
Coker-Kerosene	2.5	430	0.958	3.67	15.2	11.8	21.5	19.5	15	17	61	none
		440	0.936	3.42	22.1	13.8	20.0	18.1	14	12	73	trace
Tetralin	0.25	430	0.956	3.66	16.8	9.5	20.6	20.1	16	17	62	none
		440	0.944	3.36	21.2	12.7	20.8	19.3	13	13	72	none

Pressure = 1000 psi Exit Gas Rate = 3500 cu ft/bbl LHSV = 1

*mineral matter free

to higher temperatures thereby effecting substantially greater conversion. With the whole bitumen, as separated from the sands, it was possible to operate continuously* at 1000 psi and 430°C, converting 66 - 67 % of the residuum present in the feed into distillable liquid product. The addition of 2.5 and 5 % diluent (the 100 - 500°F fraction distilled from the bitumen) reduced the rate of accumulation of coke and pitch enabling continuous operation at 440°C. The liquid product formed under these conditions contained only 10 - 11 % by volume +990°F residuum, representing 75 - 78 % conversion of the residuum.

The boiling range of the fraction used as diluent is an important factor. The greatest effect was obtained with the hydrocarbon fraction distilling between 100 and 500°F. Only a slight improvement was observed with the 500 - 600°F fraction. Essentially similar results were observed with the "coker kerosene" diluent as with the 100 - 500°F fraction distilled from the bitumen. The experiments conducted with bitumen diluted with 10 and 15 % coker kerosene indicated little improvement beyond that observed with only 5 %.

The dramatic effect of adding, or removing, a relatively small amount of low-boiling hydrocarbon material on the rate of accumulation of sludge and pitch suggests that one or more components of the low-boiling fraction are acting as hydrogen transfer agents. Large, high-molecular-weight, free radicals are generally regarded as precursors in the formation of polymer tars and coke in any (or all) of three ways: a) by combining directly, b) by adding on to other heavy hydrocarbon molecules, or c) by splitting-off olefin or paraffin gases, thereby reducing the hydrogen content of the free radical until coke is ultimately formed. The transfer of hydrogen to the free radical would effectively terminate any of the above processes.

---

*"continuously", in the present context, representing a minimum of 7 to 8 hours of trouble free operation with no significant accumulation of solid matter in evidence when the system was broken down for inspection.

Hydrogen transfer mechanisms for low-boiling hydrocarbon fractions have been proposed frequently in connection with the liquification and catalytic hydrogenation of coal (9) and, more recently, in connection with the catalytic hydrocracking of asphaltic crude oils*. Evidence to support the view that this type of explanation is valid in the present case, even in the absence of a good hydrogenating catalyst, was obtained in the series of experiments in which the "as received" bitumen was diluted with 0.25 vol % tetralin. (See the last section of Table 5). No solids accumulation was observed at either 430 or 440°C in the presence of 0.25 % tetralin and 72 % of the +990°F residuum was converted to distillable hydrocarbon at 440°C . . . . a result similar to that obtained with the 5 % diluent.

The importance of the lower boiling fractions to the successful operation of the process was also emphasized indirectly in experiments undertaken to demonstrate the general effect of the hydrogen flow rate. Initially a gas exit rate of 3500 cu ft/bbl was selected as representing a practical level of flow. When the gas exit rate was increased to 7500 cu ft/bbl, a small but distinct pod of coke formed on the tip of the thermocouple well under conditions which otherwise had been found to be relatively free of solids accumulation problems. A further increase in the gas rate to 10,000 cu ft/bbl triggered massive solids formation. The results of these tests are summarized in Table 6. Photographs of the solids deposits are shown in Figure 5. It would appear that at elevated gas flow rates the lower-boiling (diluent) fractions are being swept out of the reaction vessel in much the same way as hydrocarbons are separated in a steam distillation.

Also shown in Table 6 is the effect of the liquid feed rate. As one would expect, the extent of hydrocracking achieved at constant temperature decreases as the through-put increases, i.e., at LHSV = 1 and 435°C the liquid

---

* For example, Hesp (10) reports that the pressure of hydrogen needed for satisfactory operation can be reduced substantially, if naphthenic aromatic compounds such as tetralin are present in the feed.

TABLE 6

The Effect of Liquid Feed and Exit Gas Rate on Conversion

Reaction Temp (°C)	LHSV Vol Feed/hr / Vol Reactor	Exit Gas Rate (cu ft/bbl)	Specific Gravity (60/60°F)	Liquid Product Boiling Range - Equiv Temp(°F) at one Atm(vol%) RT - 392	392 - 482	482 - 630	630 - 790	790 - 990	+990	Conversion +990°F Residuum* (wt %)	Remarks re: Accumulation of Sludge
435	1	3500	0.938	18.9	14.5	19.3	20.3	14	13	70	no
435	1	7500	0.932	17.4	13.9	23.1	19.6	16	10	~77	yes
435	1	10000	-	-	-	-	-	-	-	-	extensive
435	1	3500	0.938	18.9	14.5	19.3	20.3	14	13	70	no
435	1.5	3500	0.941	15.6	11.8	22.1	19.5	16	15	65	no
435	2	3500	0.966	11.2	10.1	20.1	22.6	17	19	55	no
445	2	3500	0.947	16.5	12.0	21.8	21.7	15	13	70	no
450	2	3500	-	-	-	-	-	-	-	-	yes

Feed - Bitumen + ~~50~~ 5 vol % coker kerosene Pressure = 1000 psi

*mineral matter free

7500 CU. FT./BBL.

10,000 CU. FT./BBL.

COKE DEPOSITS OBSERVED AT HIGH EXIT GAS RATES

Figure 5

product formed contained approximately 13 vol % residuum material, rising to 19 vol % at LHSV = 2. It was necessary to increase the reaction temperature ten degrees, to 445°C, to reduce the residuum concentration to 13 vol % in the product at a space velocity of two.

In conclusion, a note of caution . . . . . the hydrogen transfer capability, or catalytic activity, of the low-boiling fractions is small compared with that of a good heterogeneous hydrogenation catalyst. Success or failure with dilution hinges, to some degree, on the thermal history of the preparation of the feed stock. A number of exploratory experiments with commercial pitch feed stocks from conventional crude sources suggest that, if the residuum material has been degraded significantly in the primary distillation of the crude oil stream as it enters the refinery, dilution is not effective. Under such circumstances, coke and sludge accumulate in the reaction system under all (non-catalytic) reaction conditions that result in a reasonable amount of conversion.

ACKNOWLEDGEMENTS

The authors wish to express their appreciation to the many members of the staff of the Fuels Research Centre who have contributed to the present investigation. The authors are particularly indebted to Mr. J. M. Denis and Mr. J. J-G. Letourneau, who undertook the pilot-scale distillations and the calibration of the analytical distillation procedure, and to Mr. L. Nadon and Mr. M. A. O'Grady (retired) who helped in a great many ways in the general setting up of the high-pressure hydrocracking apparatus.

REFERENCES

1. K. Kobota and W. M. Karner, 8th World Petroleum Congress, Moscow, 1971. - Summary of experimental results: Oil and Gas Journal, June 21, pages 138-148, 1971.

2. C. G. Cortelyou, R. C. Mallatt and H. H. Meridith, Chem. Eng. Prog., 64, No. 1, 53-59 (1968).

3. L. Rowland, Associate Editor, Oilweek Magazine,
Oct. 4th issue, pages 34-35, 1971
Oct. 11th issue, pages 16-19, 1971.

4. J. J. Cameron, M. A. O'Grady and B. I. Parsons - "A Comparison of Thermal and Catalytic Hydrogenation as a Preliminary Step in the Refining of Athabasca Bitumen", Mines Branch Research Report R-217, Department of Energy, Mines and Resources, Ottawa (1969).

5. M. A. O'Grady and B. I. Parsons - "The Hydrogenation of Alberta Bitumen Over Cobalt Molybdate Catalyst", Mines Branch Research Report R-194, Department of Energy, Mines and Resources, Ottawa (1967).

6. E. D. Innes and J. V. D. Fear - "Canada's First Commercial Tar Sand Development", Seventh World Petroleum Congress, Mexico, 1967, Vol. 3, pp 633-650.

7. N. A. C. Smith, H. M. Smith, O. C. Blade and E. L. Garton - The Bureau of Mines Routine Method for the Analysis of Crude Petroleum", U. S. Bureau of Mines, Bulletin No. 490 (1951).

8. R. B. Smith, T. Dresser, H. F. Hopp and T. H. Paulsen, Ind. Eng. Chem., 43, 766-770 (1951). J. J. DuBois, J. A. Glover and R. S. Buckler, U. S. Patent 3,399,116 (1968).

9. The Bureau of Mines Synthetic Liquid Fuels Program, 1944-45, Part I - Oil from Coal. Report of Investigations 5506, United States Department of the Interior, 1959.

10. W. R. Hesp - Mining and Chemical Engineering Review, 53, No. 4 (1961), Reprinted by Trait Publishing Co. Pty. Ltd., Melbourne and Sydney, Australia.