CANADA

DEPARTMENT OF MINES AND TECHNICAL SURVEYS
MINES BRANCH

OTTAWA

FUELS DIVISION
TECHNICAL MEMORANDUM 208/58-PET

THE COLD WATER PROCESS FOR THE RECOVERY OF THE BITUMEN FROM THE BITUMINOUS SANDS OF ALBERTA

4. Diluent Recovery, and Dehydration and Coking of the Wet Diluted Bitumen.

by

F.L. Booth, R.E. Carson, E.J. Burrough
and T.E. Warren

December, 1958

THE COLD WATER PROCESS FOR THE RECOVERY OF THE BITUMEN FROM THE BITUMINOUS SANDS OF ALBERTA

4. Diluent Recovery, and Dehydration and Coking of the Wet Diluted Bitumen

by

F.L. Booth[1/], R.E. Carson[1/], E.J. Burrough[1/]
and T.E. Warren[2/]

SUMMARY

This report covers experiments dealing with the refinery treatment of wet, diluted, separated bitumen produced in the Mines Branch cold water separation pilot plant. This work describes methods investigated for removal of the diluent oil and water introduced in the separation stage, and for further treatment of the bitumen by coking. Coking removes the small amount of mineral-matter remaining in the bitumen following its separation from the bituminous sand by flotation of the bitumen from the bulk of the accompanying mineral-matter. It was found that:

(1) The water can be removed by either of the two methods investigated - Burrough dehydration and flash dehydration.

1/ Senior Scientific Officers, Fuels Division, Mines Branch, Department of Mines and Technical Surveys, Ottawa, Ontario.

2/ Formerly Senior Scientist of the Fuels Division, 1929 to 1952. Presently Director, Research Council of Saskatchewan, Saskatoon, Saskatchewan.

(2) The water and diluent can be removed simultaneously by flash dehydration. In addition a portion of the bitumen can also be removed to make up any reasonable diluent losses incurred in the overall process.

(3) The bitumen can be coked employing either of two methods investigated - Knowles oven coking and flash coking - producing a hard coke amounting to between 14 and 17 percent of the bitumen, depending on the amount of diluent left in the bitumen feed to the coking unit.

(4) The calorific value, sulphur content and mineral-matter content of the coke produced were 14,000 Btu/lb, 6.9 percent and 8.1 percent, respectively.

(5) The coker distillate recovered from flash coking amounted to 75 percent of the bitumen.

(6) The specific gravity of the coker distillate was 0.93 at 60°/60°F and the sulphur content was four percent.

(7) The cracking gas formed by flask coking was six percent of the bitumen.

(8) Process losses amounted to approximately three percent of the bitumen.

CONTENTS

	Page
Summary	i
Introduction	1
Dehydration	6
Burrough dehydration	7
Description of apparatus	7
Experimental operations	17
Evaluation	19
Flash dehydration	19
Description of apparatus	21
Experimental operations	28
Evaluation	41
Coking	42
Knowles oven coking	42
Description of apparatus	44
Experimental operations	48
Evaluation	51
Flash coking	51
Description of apparatus	53
Experimental operations	57
Evaluation	62
Acknowledgments	65
References	66

TABLES

Table		Page
1	Conditions and results: Burrough dehydration experiments	17
2	Analyses of liquid product samples: flash dehydration Experiment 1	28
3	Analyses of liquid product samples: flash topping Experiment 3	30
4	Analyses of distillate oil samples: flash topping Experiment 3	31
5	Conditions and results: flash dehydration and topping Experiment 4	32
6	Analyses of distillate oil samples: flash dehydration and topping Experiment 4	33
7	Conditions and results: flash dehydration and topping Experiment 5	34
8	Conditions and results: flash topping Experiment 6	35
9	Conditions and results: flash topping Experiment 7	36
10	Conditions and results: flash dehydration and topping Experiment 8	37
11	Conditions and results: flash dehydration Experiment 9	37
12	Conditions and results: flash dehydration and topping Experiments 10 - 20	39
13	Engler distillations of kerosene diluent and of distillate oil from Experiment 20	40
14	Feed analyses and operating conditions: Knowles oven coking experiments	49

TABLES (Cont'd)

Table		Page
15	Yields and analyses of products: Knowles oven coking experiments	50
16	Feed analyses and operating conditions: flash coking experiments	58
17	Yields and analyses of products: flash coking experiments	59
18	Results of Engler distillations of feeds and distillate products: flash coking Experiments 3, 4, 5, and 6	60
19	Composition of cracking gases: flash coking Experiment 6	62

FIGURES

Figure		
1	Simplified overall flow diagram	4
2	View of dehydration and coking section	5
3	Detailed flow diagram: Burrough dehydration	8
4	Dehydration feed system	11
5	Dehydration condensing systems	15
6	Detailed flow diagram: flash dehydration	20
7	Interior of flash dehydration column	23
8	Recirculation system for flash dehydration	27
9	Detailed flow diagram: Knowles oven coking	43

FIGURES (Concluded)

Figure		Page
10	Knowles oven with door raised	46
11	Condensers for the coking systems	48
12	Detailed flow diagram: flash coking	52
13	Flash coking column with bottom plate removed	55

INTRODUCTION

The Mines Branch of the Department of Mines and Technical Surveys undertook, in the year 1949, a pilot plant investigation of the cold water separation of bitumen from the bituminous sands of Alberta. This investigation covered two distinct operations involved in the treatment of the bituminous sands.

The first operation was the separation of the bitumen from the main bulk of the sand by the cold water process. This process separated the bitumen-diluent phase from the water and sand pulp by virtue of the difference in specific gravity of these immiscible phases. This work has been described in detail by Djingheuzian (1). The second operation consisted of the intermediate refining of the bitumen-diluent phase by removing the water, diluent oil, and fine mineral matter. This report treats this intermediate refining in detail and forms the fourth of a series of reports describing the research undertaken to develop techniques for preparing commercially acceptable hydrocarbon fuels from bitumen. The first report (2) of this series presented the analytical methods used for control and evaluation of the cold water separation process. The second report (3) presented a complete compilation of the results of analyses of all samples taken. The third report (4) was an evaluation of surface active agents for use in promoting the separation of water and mineral matter from the diluted bitumen.

The " refinery section" of the bitumen separation plant had a twofold purpose, - firstly, to dehydrate the wet oil from the cold water separation section, simultaneously recovering part or all of the diluent and secondly, to submit the dry topped oil to thermal cracking conditions, producing a cracked oil product free from solids, with by-products of coke and gas. Although the coke and gas by-products were not utilized in these operations, in a full scale plant they could be used as fuels for the overall process. The gas could also provide raw material for hydrogen production for subsequent refining operations by hydrogenation.

A time limit was imposed on the entire project due to a proposed Mines Branch machine shop slated to occupy the pilot plant site. Thus, the plant design, the procurement, fabrication and erection of equipment, and all the experimental work had to be completed in less than two years. Because of this, the experimental program was considerably curtailed and optimum performances and efficiences were not attained.

Two alternative systems were provided in the refinery section for dehydration and/ or diluent recovery. These were known as Burrough dehydration and flash dehydration. There were also two alternative methods of cracking to remove the mineral matter and distill the oil to coke. These were known as Knowles oven coking and flash coking. An outline of these four systems and their interconnection in the pilot plant is shown on the simplified flow

sheet, Figure 1. Each method was examined individually and as extensively as the limited time available permitted.

All equipment was designed on a scale to process the anticipated product from the cold water separation section resulting from an original feed of 200 pounds of bituminous sand per hour. This product was estimated, for design purposes, to be 100 pounds per hour consisting of 32 pounds of bitumen, 32 pounds of diluent, 30 pounds of water and 6 pounds of solids. The actual water and solids contents of the product from the flotation section were considerably lower than estimated, amounting to less than 20 pounds and 2 pounds, respectively, per 100 pounds of product.

High-strength or corrosion-resisting materials were not employed in the refinery construction. In view of the original urgent desire to set up the plant, and its ultimate limited life, and since no high pressures were involved, ordinary steel piping and low carbon steels were used almost exclusively.

The presence of large quantities of inflammable liquids and gases in the apparatus necessitated the elimination of all sources of ignition, as well as any possibility of leakage. Smoking was of course prohibited. All motors and electrical switiches were explosion-proof. Any other sources of ignition, such as the gas-fired heaters, were under constant surveillance. The flash columns were purged with carbon dioxide gas at the beginning

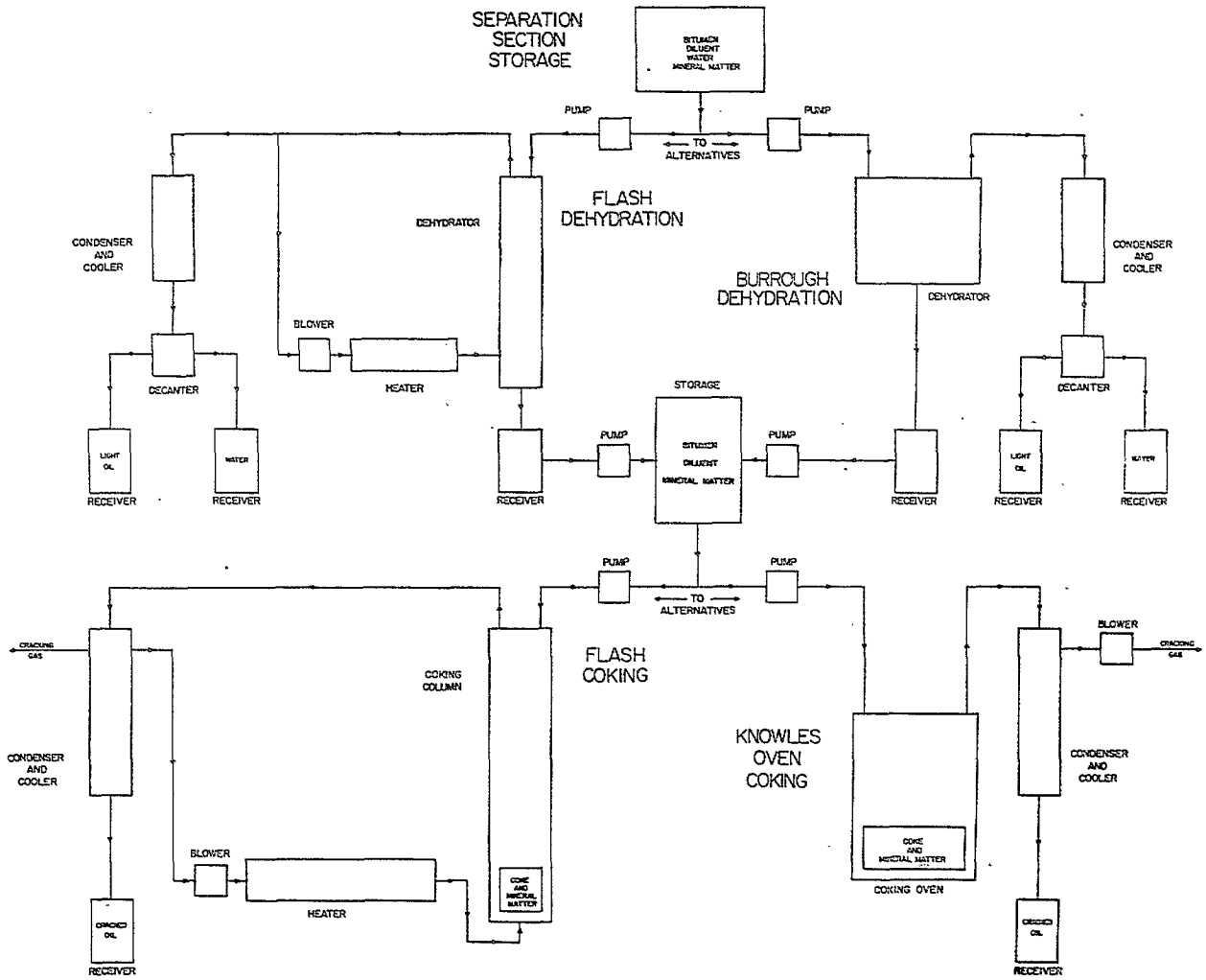

Figure 1 - Simplified Overall Flow Diagram

of every experiment to prevent an explosive air-hydrocarbon mixture being formed. Provision was made to flood the Knowles oven with carbon dioxide if necessary. Fire retardant paint (Albi-R) was used on all wooden material employed in the construction of the plant. A large exhaust fan ventilated the entire building, with intake ducts at danger points. A 2-inch water fog-nozzle and several fire extinguishers (Ansul or dry chemical) were located at strategic points. An overall view of the refinery section of the separation plant is shown in Figure 2.

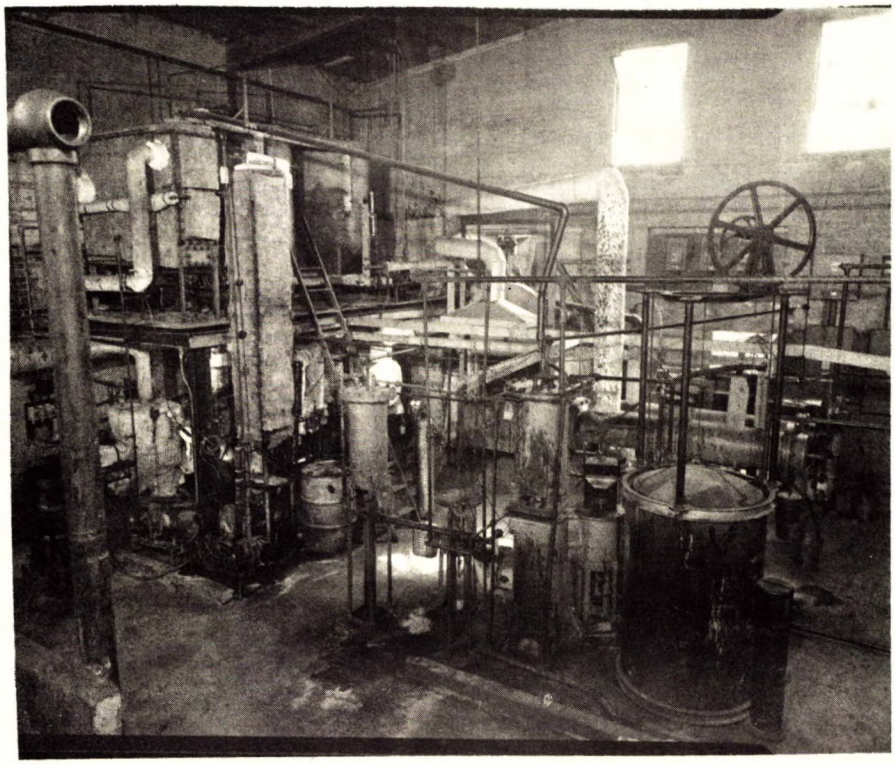

Figure 2 - View of Dehydration and Coking Section.

DEHYDRATION

At the time the dehydration equipment was designed it was assumed that the product from the separation section would contain 30 per cent water and 6 per cent mineral matter. It was anticipated that this mixture would froth badly on heating and that if high velocities existed in any piece of equipment this would lead to severe erosion caused by the mineral matter. On the other hand low velocities and poor heat transfer would cause coking. The use of conventional pipe-type heaters was considered and rejected on the grounds that the high velocities would cause erosion of the tubes, and that frothing would be extremely objectionable in this type of equipment. At the time there also existed a misconception, based on repeated statements of early workers, that this bitumen was subject to cracking at relatively low temperatures. This suggested that frothing would be even more troublesome in a pipe heater if the temperatures were raised to remove the diluent as well as the water. The view that bitumen cracked more readily than normal petroleum was subsequently contradicted by Sterba (5) so that the rejection of the pipe heater on this basis may not have been entirely justified.

Two alternative systems of dehydration, and possible diluent removal, were designed which were expected to produce a minimum of frothing, coking and erosion difficulties. These systems were known as Burrough dehydration and flash dehydration and will be

discussed separately on the following pages.

Burrough Dehydration

The Burrough method of dehydration employed a principle that has been patented by E. J. Burrough (6). Figure 3 is a detailed flow diagram illustrating the process as adapted to the requirements for dehydration of the wet product from the separation section.

The wet oil was pumped in at the bottom of the dehydrator, gradually heated by exchange with the product, and finally heated to the required temperature by means of pipes lying at the surface of the oil. Only the thin layer of oil at the surface of the main body of oil in the dehydrator was heated to the maximum temperature. In this way, the frothing hazard was reduced. Dowtherm vapours inside the pipes were used as the heating medium giving accurate temperature control and thus preventing coke formation caused by local overheating. The vapourized water and the light oil which distilled off with the water were passed overhead to the condenser and cooler, after which they were separated in the decanter by taking advantage of their immiscibility and the difference in their specific gravities. The dry oil flowed into a receiver from which it was pumped to storage.

Description of Apparatus

The product from the cold water separation plant was not fed directly from the thickener overflow as it was more convenient to

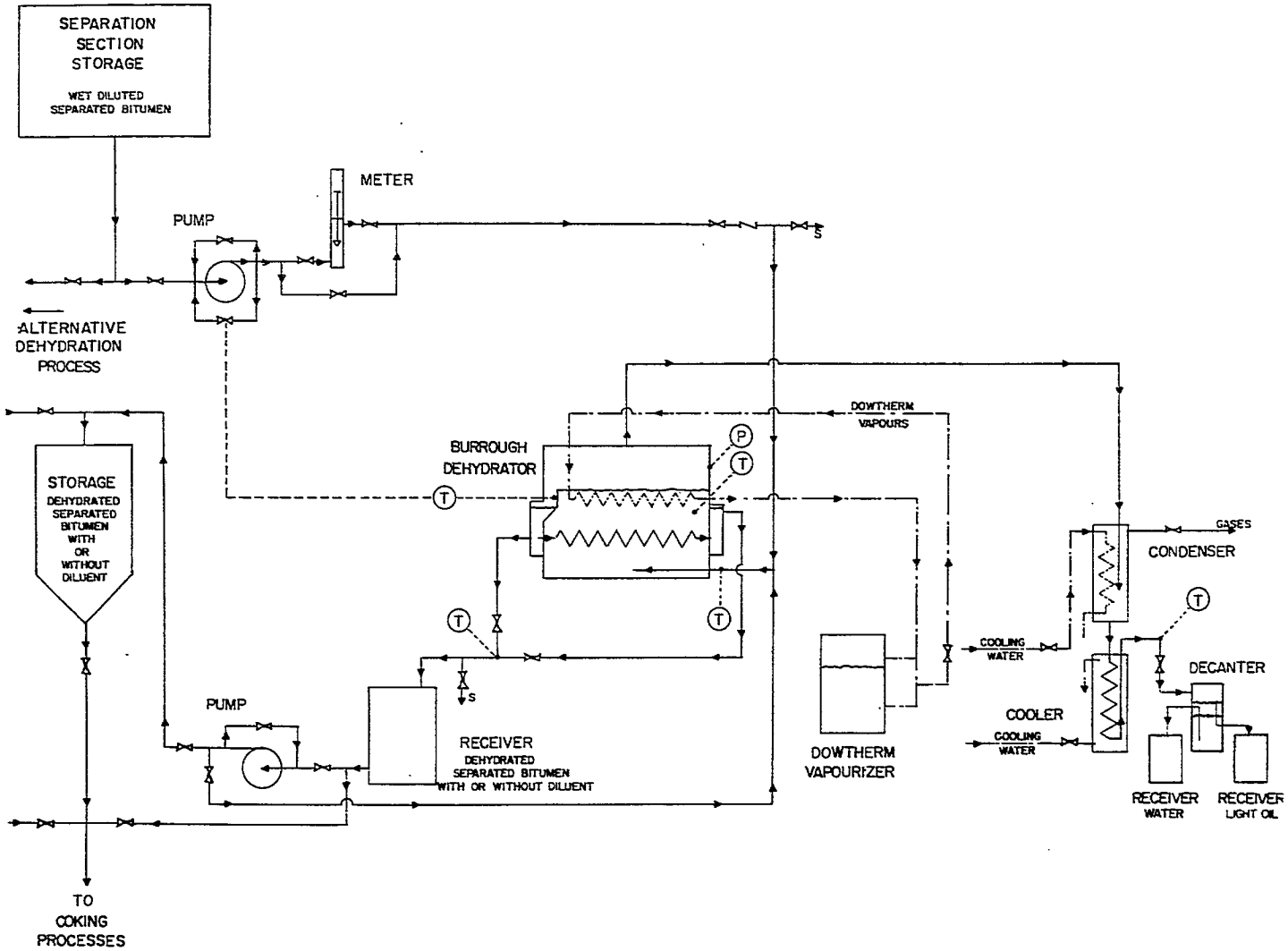

Figure 3 - Detailed Flow Diagram: Burrough Dehydration

carry on the experimental work of each section separately. Instead, the separated bitumen-diluent product was sent to a large 1000-gallon settling tank, followed by storage in 46-gallon drums. When required for feeding, the oil was transferred from the storage drums to an open 46-gallon feed drum mounted on a portable platform weigh-scale, enabling a constant check to be kept on the amount of feed and the rate of feeding. An electrically-driven propeller-type top-entering mixer was used to keep the contents of the feed drum constantly agitated, thereby more nearly simulating the unsettled thickener overflow. Also, it was found that, without the mixer, under certain conditions slugs of water which had settled out were fed into the hot dehydration apparatus with consequent undesirable and troublesome pressure surges.

The material was fed using a 1/4-inch straight-cut gear pump rated at 0.2 gallons per 100 revolutions at open discharge. The pump was driven by a one quarter horsepower motor at a speed of approximately 300 revolutions per minute. It was realized that the fine mineral matter in the feed would cause wear and loss of efficiency in this type of pump, but it was found economical on this scale to replace it with a new pump when required. The pump provided sufficient suction to draw the feed through a 3/4-inch hose from the feed drum. The operating speed of the pump was set to give a considerably higher pumping rate than necessary and the actual feed rate was then adjusted as desired by recirculating the excess fluid, using a valve in a by-pass line connecting the pressure side

of the pump to the suction side.

A self-acting temperature controller of the direct-acting type with double-seated valves was used in this by-pass line. It was actuated by pressure transmitted from a bulb inserted at the control point which was inside the dehydrator tank where the hot liquid product overflowed a weir. When the temperature of the product fell below the set point causing a proportional change in pressure within the actuating bulb the by-pass control valve opened, thereby reducing the feed to the dehydrator and allowing the product temperature to recover.

In actual practice it was found more satisfactory to establish and maintain a fairly constant feed rate, using a manually-operated valve in a second by-pass around the pump. Some trouble was experienced with both methods of control, apparently caused by a gradual accumulation of mineral matter in the by-pass line with a consequent increase in the feed rate. Use of an electric vibrator on the by-pass line alleviated this condition but did not correct it entirely.

The actual feed rate was regularly checked by timing one or two pound increments on the feed drum scales. An instantaneous check was provided by a flowmeter of the rotameter type. Since the fluid was opaque, it was necessary to use a top-extension tube on this meter, with an indicating piston in this tube attached to the metering float. The range of these flowmeters is somewhat limited and at times it was found necessary to exceed their capacity. It

was found that, by opening and adjusting the control valve in the by-pass around the meter, a relative scale reading could be obtained which provided sufficient indication of variations in the feed rate. Figure 4 shows the feeding system used and a portion of the Burrough dehydrator tank is visible at the top of the picture.

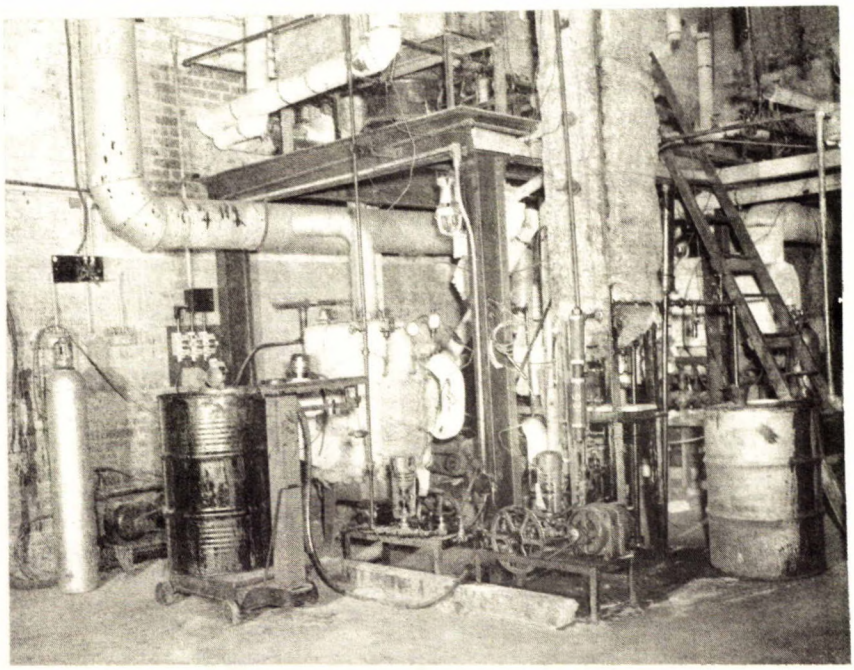

Figure 4 - Dehydration Feed System. A portion of the Burrough dehydrator is shown at top centre. The lower portion of the flash dehydrator column is visible at right centre.

The Burrough dehydrator was a closed rectangular tank 15 inches wide, five feet long and four feet deep, with the bottom two feet above the floor. Access to the interior was provided by the bolted top plate. The tank was insulated with glass wool blankets two and one half inches thick. The liquid level was maintained at approximately 30 inches above the bottom by means of an internal overflow weir across one end of the tank. The Dowtherm vapours used for heating the oil were contained in three longitudinal tubes made from 2-inch extra-strong pipe connected to common headers and so arranged that their top surfaces coincided with the liquid level. Three rows of heat interchanger tubes were spaced below the heater tubes, each row consisting of three 1 inch diameter brass tubes. The liquid feed passed through a ball-type check valve and entered the tank at the bottom near the centre. It was preheated as it passed the three rows of heat interchanger tubes and brought to the final desired temperature at the Dowtherm tubes. The steam and light oil vapours formed passed off from the top of the vapour space.

The dried oil passed over the overflow weir into a removable external header, and then through the interchanger tubes into a second external header at the opposite end. Here it overflowed by gravity through a pipe to a storage drum. Provision was made to by-pass all or part of the weir overflow externally instead of through the interchanger tubes, to avoid overheating the main body of liquid in the tank. The by-pass was controlled manually by two valves,

according to the temperature indicated by a thermocouple situated about 6 inches below the surface of the liquid, the so-called "preboil" temperature.

In spite of this provision, on occasion difficulties were encountered when overheating of too large a proportion of the wet oil occurred, with consequent excessive froth formation. This happened particularly when operating with low feed rates during attempted topping experiments. A connection was made to a three-foot water manometer to give an indication of pressure conditions in the vapour space. It was found necessary to enclose and vent the second header to prevent overflowing under surging conditions. The product overflow pipe was lowered to provide accomodation for excess liquid which was forced through the tubes. However, the vapour seal through the interchanger tubes was then too easily broken. This was corrected by closing off the top row of tubes, and subsequent experiments indicated that this still left sufficient heat exchange capacity.

The hot liquid product which overflowed through the pipe from the final header, or which travelled through the by-pass around the interchanger tubes, passed to an intermediate storage drum which was vented through a vertical air condenser. From here the oil was pumped either to a storage tank or to drums. The pump employed was a 1/4-inch gear pump, mounted and driven in a similar manner to the wet feed pump, with its pumping rate controlled by a

manually regulated by-pass. Provision was also made to recirculate this hot oil to the feed line using the same pump. This arrangement allowed the apparatus to reach operating conditions more rapidly since a feed of some sort was necessary when starting up to prevent overheating of the surface layer.

The steam and light oil vapours formed in the dehydrator passed overhead to a condenser. This condenser was a vertical cylinder 16 inches in diameter and two and one half feet high, with cooling water circulating through a coil of 1 - inch pipe, and provided with a vent for non-condensable gases. The condensate was cooled by passing through a coil of 1 - inch pipe immersed in a second vertical cylinder mounted directly beneath the condenser. This cylinder was roughly the same size, with the cooling water maintained at constant level by an overflow pipe.

The condensed water and light oil passed by gravity from the cooling coil to the decanter, where they were allowed to separate by the difference in their specific gravities. The decanter was 12 inches in diameter and the liquid level within was maintained about 12 inches above the bottom. Provision was made to vary the thickness of the oil layer above the water layer by varying the height at which the oil overflowed to a receiver. The water was continuously drawn off from the bottom of the decanter to another receiver. The condenser, aftercooler and decanter are illustrated in Figure 5.

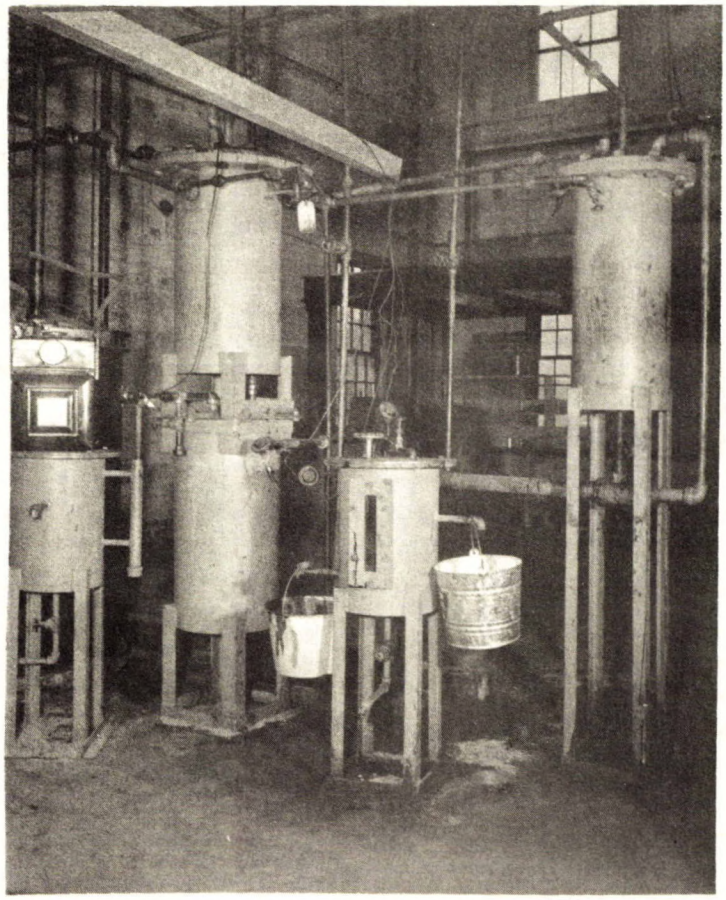

Figure 5 - Dehydration Condensing Systems. Condenser, aftercooler and decanter for the Burrough dehydrator are on the left. The condenser and aftercooler for the flash dehydrator are on the right, with the decanter in the foreground.

The Dowtherm heating vapours used for Burrough dehydration were produced by a gas-fired vapourizer with a rated output of 90,000 Btu per hour. Dowtherm is a mixture of diphenyl and diphenyl-oxide, which is a liquid above 54°F and boils at 500°F, giving high

vapour temperatures at low pressures. Operating pressures for this process were as high as 30 pounds per square inch gauge, with a corresponding temperature of 600°F. To eliminate the need for a return pump, the dehydrator tank was placed on an overhead gallery, permitting gravity return of the condensate.

The Dowtherm vapour temperature was held constant by controlling the pressure through a pressure-actuated mercury switch that operated a motorized valve in the gas line. This valve was also operated by a safety pilot control, a safety high pressure control and a low liquid level control. All Dowtherm piping was extra-strong, 2-inch for the vapour line, and 1-1/2-inch for the condensate. Glass wool (Fiberglas) pipe insulation, two inches thick, was used on this piping. The boiler itself was insulated by a 4 inch thick glass wool blanket (Fiberglas). Welded joints were used wherever possible, with standard 300 pound flanges elsewhere. Some difficulty was experienced in obtaining tight flange joints, but this was eventually overcome by using solid aluminum gaskets. Control valves were steel, with extra long stuffing boxes and special packing. The system was provided with manual vent valves at the high points to permit removal of air and water vapour.

The Dowtherm vapourizer is visible under the gallery in the centre background of Figure 4.

Experimental Operations

The Burrough dehydrator was originally intended and designed solely for dehydration. However, its capability of removing diluent was also investigated.

Eight experiments were made under varying conditions. In Experiments 1 to 5 and 7 and 8, the feed rate and product temperature were varied and the observations detailed in Table 1 were made.

TABLE 1

Conditions and Results: Burrough Dehydration Experiments

Experiment No.	Water Content of Feed	Rate of Feed	Dowtherm Vapour Temp.	Feed Temp	Product Overflow Temp	Water Content of Product	Distillate Oil Collected
	% by wt	lb/hr	°F	°F	°F	% by wt	% of AMF* feed
1	15.0	350	500	66	220	3.6	4.0
2	11.5	350	500	67	250	trace	5.9
3	15.7	140	565	64	310	trace	15.4
4	14.4	310	475	64	265	1.0	11.0
5	16.0	250	500	53	250	0.6	5.9
7	16.0	200	595	63	285	0.5	12.6
8	15.8	160	600	57	260	0.8	9.2

* Ash and moisture free.

As was to be expected, by decreasing the feed rate and raising the product temperature the amount of oil distilled off and collected was increased. Therefore, in Experiment 6 the product from Experiment 4 was fed back through the dehydrator at a slow

rate and the product overflow temperature was raised. In this way it was hoped to remove a large proportion of the diluent. However, under these conditions, the main body of the charge became overheated and frothed, filling the system and forcing a shut down. The rate of feed at the time of frothing was 40 pounds per hour, and the product overflow temperature was 405°F. Approximately 46 pounds of oil were fed into the apparatus. The distillate recovered amounted to eight pounds or 17.4 per cent of the ash and moisture free feed.

During Experiments 7 and 8 the available heat from the Dowtherm heating tubes fell off considerably. It was thought possible that coking was taking place on the exterior of the tubes. The apparatus was subsequently opened and the tubes were examined. A very thin layer of semi-brittle material was found consisting of 45 per cent mineral matter. This formation was possibly caused by overheating when the liquid level was below the tubes. A thin layer of oil on the tubes would thus become overheated and leave a hard shell-like formation of asphalt reducing the heat transfer. Another possibility was that this asphalt was formed during the attempted topping experiment when the product temperature was over 400°F. Also there was probably deposition of mineral matter on the top of the tubes due to settling at elevated temperatures. In any case, it was not deemed advisable to use this particular apparatus as a topping still.

Evaluation

From the results obtained it appears that, using a Burrough dehydrator similar in size to the one used in these tests, 200 pounds of feed per hour consisting of settled, wet, diluted, separated bitumen, containing about 15 per cent water and equal portions of diluent and bitumen, can be successfully dehydrated at a product overflow temperature in the neighbourhood of 275°F. This type of apparatus does not appear to be suitable for extensive topping operations because of difficulties arising from frothing.

Flash Dehydration

The alternative method of water removal was the so-called flash dehydration system. Figure 6 is a detailed flow diagram of this process. The wet oil was pumped into the top of the dehydrator column, where it dripped down over a series of internal sloping adjustable plates. Superheated steam and hydrocarbon vapours were pumped into the bottom of the column, by means of a constant-volume gas pump, coming into intimate contact with and heating the down-coming fluid. The water and some oil were vapourized and passed off with the heating vapours at the top of the column through an entrainment separator. The gas pump recirculated the vapours through the superheater and back to the bottom of the column. The additional water and oil vapourized could not be accomodated by the

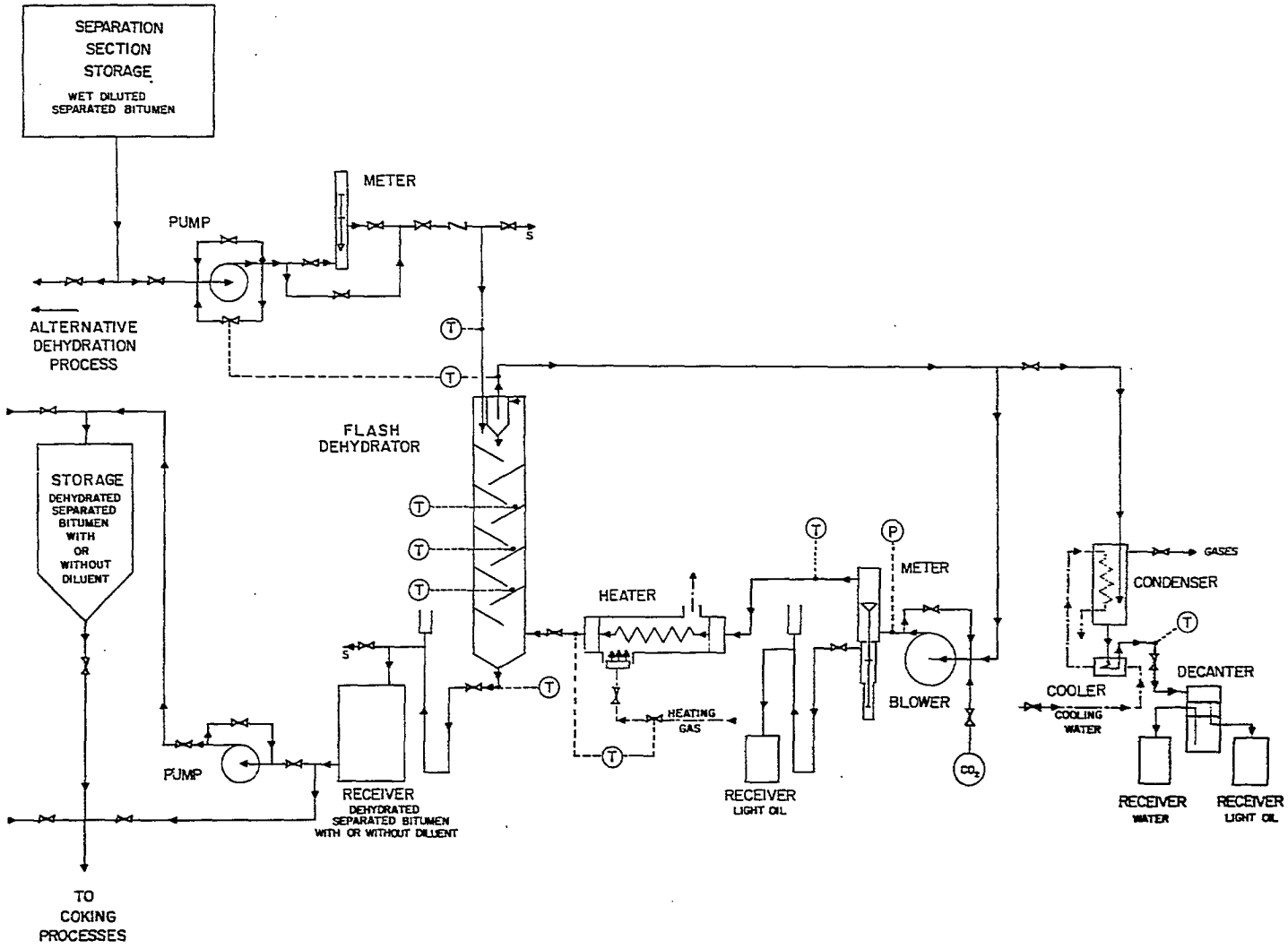

Figure 6 - Detailed Flow Diagram: Flash Dehydration

constant-volume pump. They were passed to the condenser and cooler, and separated by gravity in a decanter. The dried oil product passed through a vapour seal at the bottom of the column into a receiver.

Description of Apparatus

The remarks and the description concerning the method and apparatus used for feeding the wet mixture to the flash dehydrator are the same as set down when describing the apparatus for Burrough dehydration and this equipment may be seen in Figure 4. A similar but separate piping system was used, although it was necessary to interchange the liquid flowmeter between the two feed lines.

The flash dehydrator itself was a vertical column 12 inches square and approximately eight and one half feet long, with its top 13 feet from the floor. It was insulated with glass wool (Fiberglas) blankets two and one half inches thick. The feed entered at the top through a 1/2-inch pipe and a ball-type check valve, and was spread evenly across the width of the column by a shallow trough. It then made its way down over a series of nine sloping plates. These were adjustable to various angles between 15 and 35 degrees from the horizontal. The front of the column consisted of two coverplates, which were bolted on and permitted access to the interior for inspection or for changing the slope of the plates. The superheated steam and hydrocarbon vapours entered the column near the bottom through

a check valve and a slotted 2-1/2-inch pipe and then swept up past the inclined plates meeting the descending liquid. The water and part of the oil feed were vapourized, the extent of vapourization depending on the temperature and rate of recirculation of the heating vapours. The resultant vapour mixture left at the top centre of the column by a 2-1/2-inch pipe, after passing through a cyclone-type separator which removed entrained liquid droplets and mineral matter and re-introduced them to the column back at the point where the feed met the top plate. Three thermocouples were inserted at various heights in the column to provide an indication of the temperature gradient.

The lower portion of the flash dehydrator column and its general arrangement may be seen in Figure 4. The arrangement of the sloping plates as well as other interior details are shown in Figure 7, which illustrates the column with both front cover-plates removed.

The liquid product, dry, and either partially or completely topped, left at the bottom of the column through a sealing device. At first this was a seal pot, but it was found inadequate under even small pressure surges. To replace it, a continuous seal of the gooseneck type was made with a surge pot at the top, and this allowed a much greater pressure differential. The liquid product overflowed just below the surge pot and was fed into a storage drum. The temperature of the product was indicated by using a thermocouple located at the point of exit. This thermocouple, or rather

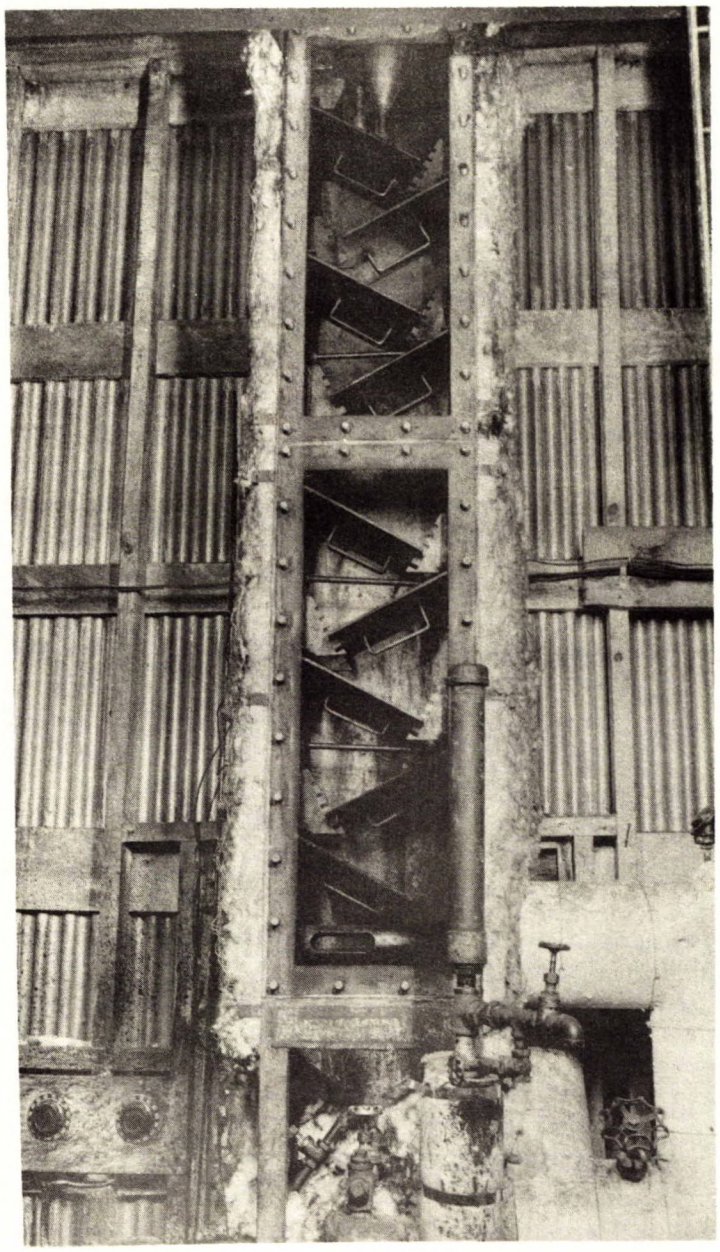

Figure 7 - Interior of Flash Dehydrator Column

its protecting tube, tended to be a source of trouble when extensive topping was taking place as it seemed to be a focal point for solidification, followed by plugging of the entire seal. This could have been overcome by continuous heating of the seal pipe, but it was found possible to alleviate the situation sufficiently with careful operation and additional insulation at the thermocouple well.

As the gas pump was of the positive displacement type, the increase in the amount of steam and hydrocarbon vapours leaving the column over the amount entering could not be accomodated. Instead, this excess passed off to the condenser. The balance of vapours went to the gas pump and were recirculated. The gas pump was a twin-impeller type driven at constant speed by a three horsepower motor. Its rated capacity was approximately 200 cubic feet of gas per minute against a back pressure of two pounds per square inch. A by-pass containing a valve was constructed around the pump to allow control of the recirculation rate of the vapours. The topping runs imposed rather severe conditions on the gas pump because of the high vapour temperatures required, but no permanent difficulty was encountered. Provision was made to introduce carbon dioxide at the gas pump before each experiment to ensure the absence of air from the system.

The recirculating vapours, after leaving the gas pump, passed through a flowmeter of the ratosleeve (variable area) type with a dashpot underneath and a bottom indicating extension. The

metering sleeve with float was mounted between two 5-inch flanged pipe tees. A connection was also made at this point to a three foot mercury manometer for the purpose of reading the maximum pressure in the system. With the above type of flowmeter, condensate tended to settle out at the float head. This condensate was drained off from the top of the dashpot chamber through a seal. The original seal pot was satisfactory until some of the later experiments which operated under slightly higher pressures. It was then necessary to devise a gooseneck seal with a surge pot at the top, and this proved satisfactory. The hot condensate ran through a pipe from the top of the seal to a receiver.

From the flowmeter the vapours were sent through the superheater. The line from the column through the flowmeter and blower to the heater was insulated with one inch of glass wool (Fiberglas) pipe insulation. The superheater was a horizontal heater about 10 inches in diameter and four and one half feet long, with the hot products of combustion baffled through the shell to the stack. The steam and hydrocarbon vapours made a single pass through 13 tubes, seven eighths inches in diameter, which were provided with a floating header on the cool end to permit expansion. The heater tubes were of brass originally and after running for some time they became loose in the header. They were replaced with steel tubes which allowed higher temperatures to be employed for the topping runs. The shell of the heater was insulated with two inches of high temperature insulation

(Newtempheit) and two inches of 85 per cent magnesia.

Heat was provided by city gas burning in a 14 inch diameter wheel-type atmospheric gas burner. For topping operations more heat was required, and a positive displacement gas pump with a manually controlled by-pass was placed in the gas-line. This increased the gas pressure sufficiently. A three foot water manometer was used to give an indication of burner pressure. Pilot protection was provided by a solenoid gas valve, controlled by a switch operated by a thermocouple at the pilot flame. The burner itself was controlled by a self-acting controller of the direct-acting type. The actuating bulb was placed in the line carrying the heated vapours from the heater; thus, if the temperature at this point became too hot, the flow of city gas to the burner was reduced as necessary.

Figure 8 shows the arrangement of the gas-pump, the flowmeter and the superheater in the recirculating vapour line of the flash dehydration system.

From the heater, the hot vapours were returned to the bottom of the flash column through a 2-1/2-inch pipe insulated with two inch thick glass wool (Fiberglas) pipe insulation. As previously mentioned, that portion of the vapours leaving the top of the column which could not be accommodated by the gas-pump was sent to the condenser. This condenser was a vertical cylinder, 12 inches in diameter and two and one half feet high, with cooling water circulating inside through a coil of 3/4-inch pipe. A vent through the top of the condenser was provided for non-condensable gases. The

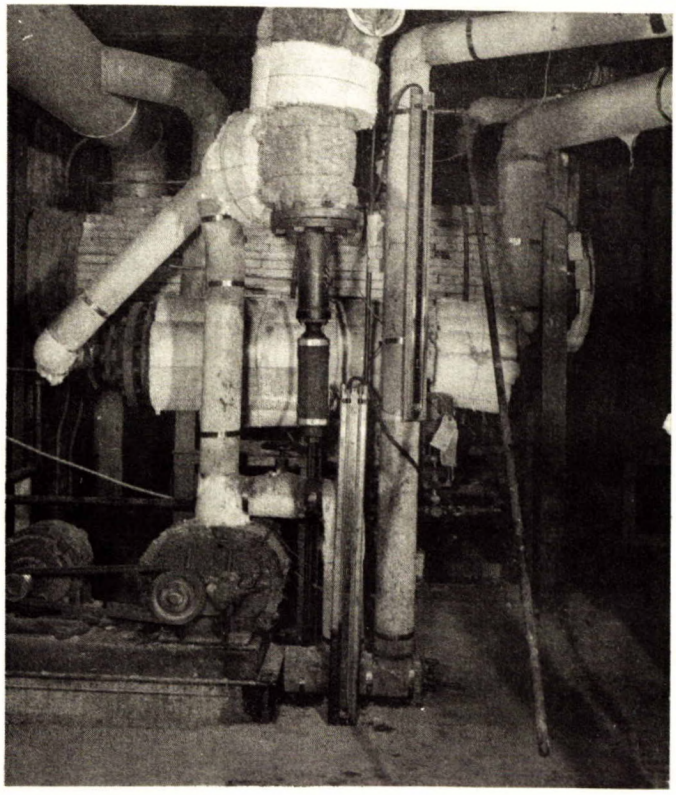

Figure 8 - Recirculating System for Flash Dehydration. The gas pump and flow meter are in foreground immediately in front of the superheater. The heater for flash coking is visible in the background.

condensate was cooled by the incoming water passing through the inner pipe of a straight-run double-pipe heat interchanger and then passed by gravity from the cooler to a decanter, of the same type and size as previously described under the Burrough dehydration apparatus. Here water and condensed oil separated by gravity and then passed to receivers. The condenser and aftercooler may be

seen in Figure 5, which also shows the decanter with its receivers.

Experimental Operations

Twenty experiments were conducted with the flash dehydrator.

During the first experiment, samples of product were taken at various product temperatures to determine the required temperature for dehydration. The feed rate varied slightly throughout the run, between 175 and 200 pounds per hour. Two barrels of feed were used during the experiment. The first contained 6.4 per cent water and the second 13.8 per cent water.

The results of analyses are shown in Table 2.

TABLE 2

Analyses of Liquid Product Samples: Flash Dehydration Experiment 1

Product Temperature °F	Feed Water Content % by wt	Product Water Content % by wt
220	6.4	0.7
240	6.4	0.7
250	6.4	0.7
260	6.4	0.3
270	6.4	0.1
220	13.8	0.7
275	13.8	0.2
275	13.8	0.1
280	13.8	0.1

During the final hour and a half of this experiment, when the last three samples were taken, the recirculating heating gas entered the column at approximately 475°F and left at approximately 245°F.

From the results of Experiment 1, it was decided that, in Experiment 2, a product temperature of 275°F would be maintained. The product temperature is influenced directly by three factors: feed rate, recirculating gas rate and recirculating gas temperature. By adjusting these factors, the required product temperature was maintained. However, some difficulty was encountered in maintaining a constant rate of feed. An operator was required to continually adjust the control valve on the feed by-pass line.

Four hundred pounds of feed, containing 16.2 per cent water, were charged under operating conditions at an average feed rate of 100 pounds per hour. The recirculating heating gas entered the column at approximately 425°F and left at approximately 245°F.

The product contained 1.0 per cent water. Sixteen pounds of distillate oil with a specific gravity of 0.808 were recovered at the meter seal and 21 pounds with a specific gravity of 0.793 were recovered from the decanter. Total distillate oil recovered amounted to approximately 11 per cent of the total oil fed. Distillation of the distillate oil recovered showed a very low residue of 2.0 per cent by volume, indicating negligible entrainment overhead from the column.

Considerable difficulty was experienced in maintaining a seal at the product outlet, and at the condensate seal pot on the flow meter. This was especially true when changing from one feed barrel to the next. Therefore, before Experiment 3, alterations were made in

seal construction allowing a larger back pressure.

Experiment 3 was made with the object of determining the capabilities of this unit as a topping still for recovery of diluent. For this first trial, a feed with a low water content of 4.4 per cent was used. Under operating conditions the recirculating heating gas entered at 415°F and left at 350°F. Samples of product were taken at various temperatures to determine the extent of topping, with the results shown in Table 3.

TABLE 3

Analyses of Liquid Product Samples:
Flash Dehydration and Topping Experiment 3

Product Temperature °F	Water Content of Product % by wt	I.B.P. of Product °F	Percent by Weight of Product Removable by Engler Distillation up to 550°F
300	0.2	396	8.5
315	trace	396	8.5
335	trace	390	12.5
350	trace	386	12.4

The decrease in the extent of topping at 335°F and 350°F was probably due to the rate of feed which was increased from 100 to 125 pounds per hour.

Previous analyses of bitumen from the same region (7) indicate approximately eight to ten per cent by weight can be removed by an Engler distillation up to 525°F. This suggested complete recovery of diluent, or its equivalent in bitumen light ends, could

be obtained with this unit.

Samples of distillate oil were removed from the meter seal and the condensate decanter at various product temperatures. Results of analyses are listed in Table 4.

TABLE 4

Analyses of Distillate Oil Samples:
Flash Dehydration and Topping Experiment 3

Sample Taken at	Product Temperature °F	Engler Distn Range °F	Engler Distn Residue % by vol	Specific Gravity of Sample at 60°/60°F
Meter Seal	300	384-580	2.0	0.821
Meter Seal	315	340-636	2.0	0.828
Decanter	335	340-562	1.5	0.807
Meter Seal	335	400-620	1.5	0.828
Decanter	350	365-572	6.4	0.829
Meter Seal	350	404-610	12.5	0.854

The large residues and high specific gravities at 350°F indicated entrainment from the flash column. This may have been caused by the feed rate, which was increased to 125 pounds per hour, or by too high a recirculating gas rate, or by a combination of both these factors.

Experiment 4 was made with the purpose of investigating the possibility of topping a feed containing higher percentages of water than that in the feed in Experiment 3. The initial feed contained 5.5 per cent water. When the product temperature had risen past 300°F and the temperature of the recirculating gas was 415°F, the water

content of the feed was increased to 7.4 per cent. As the experiment continued, the water in the feed was gradually increased to a final content of 8.4 per cent.

Conditions and results of Experiment 4 are shown in Table 5.

TABLE 5

Conditions and Results:
Flash Dehydration and Topping Experiment 4

Sample	Feed	Water in	Product	Water in	I.B.P. of	% by wt of Product Removable by Engler Distillation up to 550°F
Time	Rate lb/hr	Feed % by wt	Temperature °F	Product % by wt	Product °F	
2:00 pm	70	7.4	320	0.1	366	31.2
2:30 pm	100	8.0	220	0.1	336	28.0
3:00 pm	70	8.4	317	trace	364	36.3

Assuming that 12.0 per cent by weight of bitumen is removable by Engler distillation up to 550°F (7), then an average of approximately 23 per cent of the dry, mineral matter-free product from this topping experiment was original diluent.

Results of analyses of the distillate oil removed by the dehydrator are given in Table 6.

TABLE 6

Analyses of Distillate Oil Samples:
Flash Dehydration and Topping Experiment 4

Sample Time	Engler Distn Range °F	Engler Residue % by vol	Sample Specific Gravity at 60°/60°F
2:00 pm	370-558	1.6	0.812
2:30 pm	388-562	1.6	0.810
3:00 pm	328-535	2.2	0.802

The results from Experiment 4 indicated that a longer residence time in the column was required for complete topping. This was obtainable by decreasing the throughput, or by decreasing the slope of the plates. Accordingly, in Experiment 5, a decreased rate of feed of approximately 50-60 pounds per hour was used.

Conditions and results of Experiment 5 appear in Table 7.

Assuming 12.0 per cent by weight of bitumen is removable by Engler distillation up to 550°F, at a feed rate of 50-55 pounds per hour a dry final product was recovered consisting of approximately eight per cent original diluent and 92 per cent bitumen on a mineral matter-free basis.

Experiments 6 and 7 were for the purpose of producing a material suitable for feeding to the Knowles oven coking unit. A water-free material with a large proportion of the diluent removed was required. Removal of all the diluent would produce a material too viscous to be pumped at room temperature.

TABLE 7

Conditions and Results:
Flash Dehydration and Topping Experiment 5

Sample Time	Feed Rate lb/ hr	Water in Feed % by wt	Recirculation Gas Inlet Temp °F	Recirculation Gas Outlet Temp °F	Water in Product % by wt	I. B. P. of Product °F	% by wt of Product Removable by Engler Distillation up to 550°F
12:00 noon	50	13.0	398	274	0.1	430	18.9
12:30 pm	50	13.0	402	280	trace	336	28.3
1:30 pm	50	13.0	412	300	trace	384	18.9
2:30 pm	60	12.4	405	302	trace	384	26.7
3:30 pm	55	12.4	409	304	trace	404	17.9
4:20 pm	55	12.4	412	314	trace	372	19.8

Experiment 6 was of 13-1/2 hours duration. One thousand pounds of feed were consumed under operating conditions as indicated in Table 8. This feed was a product of previous dehydration experiments and contained approximately one per cent water. One hundred and ninety eight pounds of distillate oil were recovered from the meter seal and 26 pounds from the decanter. The average mineral matter content of the feed was approximately one per cent. Thus the total distillate oil recovered amounted to 23 per cent of the dry, mineral matter-free feed.

Conditions and results of Experiment 6 are shown in Table 8.

TABLE 8

Conditions and Results:
Flash Topping Experiment 6

Time	Feed Rate lb/hr	Water in Feed % by wt	Recirculation Gas Inlet Temp °F	Recirculation Gas Outlet Temp °F	Product Temp °F	Water in Product % by wt	I. B. P. of Product °F	% by wt of Product Removable by Engler Distillation up to 550°F
12:15 pm	75	1.2	393	270	315	trace	388	29.9
2:30 pm	75	1.0	396	294	326	trace	274	35.4
5:30 pm	100	0.6	422	321	357	trace	376	33.4
8:30 pm	100	0.7	434	313	350	trace	374	32.2

Experiment 7 was of 12-1/2 hours duration. Nine hundred and sixteen consumed under the operating conditions given in Table 9. As in Experiment 6, this feed was a product of previous dehydration experiments and contained less than one per cent water and approximately one per cent mineral matter. One hundred and ninety pounds of distillate oil were recovered at the meter seal and 24 pounds from the decanter. The total amount of distillate oil recovered was 24 per cent of the dry, mineral matter-free feed.

Conditions and results of Experiment 7 are given in Table 9.

TABLE 9

Conditions and Results:
Flash Topping Experiment 7

Time	Feed Rate	Water in Feed	Recirculation Gas Inlet Temp	Recirculation Gas Outlet Temp	Product Temp	Water in Product	I.B.P. of Product	% by wt of Product Removable by Engler Distillation up to 550°F
	lb/hr	% by wt	°F	°F	°F	% by wt	°F	
12:45 pm	71	0.7	418	305	338	trace	380	17.3
2:45 pm	115	0.7	410	289	338	trace	380	37.9
6:15 pm	90	0.3	435	325	355	trace	378	27.7
10:00 pm	90	0.3	438	328	365	trace	390	32.3

Prior to Experiment 8, the slope of the plates in the flash column was decreased. The conditions and results of Experiment 8 are listed in Table 10.

Assuming 12.0 per cent by weight of bitumen is removable by Engler distillation up to 550°F, at a feed rate of 55-70 pounds per hour a final dry product was recovered consisting of approximately 11 per cent original diluent and 89 per cent bitumen on a mineral matter-free basis. This indicated even less extensive topping than that achieved in Experiment 5, when the slope of the plates in the flash column was greater. While this was probably partly due to the increased feed rate, it was believed possible that the heater tubes were becoming covered with coke, reducing the available heat from

TABLE 10

Conditions and Results:
Flash Dehydration and Topping Experiment 8

Time	Feed Rate	Water in Feed	Recirculation Gas Inlet Temp	Recirculation Gas Outlet Temp	Product Temp	Water in Product	I.B.P. of Product	% by wt of Product Removable by Engler Distillation up to 550°F
	lb/hr	% by wt	°F	°F	°F	% by wt	°F	
1:00 pm	110	8.6	432	271	340	nil	380	32.8
3:00 pm	70	8.6	401	287	325	nil	388	22.1
4:20 pm	55	8.6	395	292	310	nil	352	21.8

the heater which was operating at its peak capacity. However, an examination of the tubes showed no untoward coking had taken place.

Experiment 9 was a dehydration experiment with the conditions and results as shown in Table 11.

TABLE 11

Conditions and Results:
Flash Dehydration Experiment 9

Time	Feed Rate	Water in Feed	Recirculation Gas Inlet Temp	Recirculation Gas Outlet Temp	Product Temp	Water in Product
	lb/hr	% by wt	°F	°F	°F	% by wt
1:50 pm	100	8.4	360	217	240	0.8
2:20 pm	110	8.4	350	205	270	0.8
5:00 pm	110	8.2	360	207	260	trace
7:00 pm	175	7.8	375	200	262	trace
8:30 pm	135	7.2	372	200	270	trace

It was noted that the available heat varied considerably throughout Experiment 9. The same difficulty was being encountered with the operation of the flash coker. It was believed that this was due to variations in pressure of the city gas supplied to the burners. This would also explain the lowering in available heat which was noted in Experiment 8. To counteract this variation, and also to increase the capacity of the heaters, a small Roots blower was installed in the main gas supply line. A valve in a by-pass on the blower controlled the burner pressure.

With this arrangement, eleven combined dehydration and topping experiments were made. These were Experiments 10 to 20 inclusive. During Experiment 15, leaks developed in the heater between the tubes and the header plates. The heater was returned to the manufacturer and the brass tubes were replaced with steel ones. With steel tubes the heater could be brought safely to a higher temperature. During Experiment 19, the outlet from the column partially plugged, backing up product in the column, causing entrainment in the overhead and eventually plugging the product seal completely so that the experiment had to be discontinued. Table 12 shows the conditions and the results of these experiments. The results showed that this apparatus could dehydrate and top in one operation. They did not show conclusively the optimum conditions for dehydration and topping. These conditions could only be determined by extensive tests, for which the time was not available.

TABLE 12

Conditions and Results:
Flash Dehydration and Topping Experiments 10 - 20

Experiment No.	10	11	12	13	14	15	16	17	18	20
Total weight of feed, lb	560	1185	1123	1062	1114	606	581	533	522	600
Feed rate (average), lb/hr	105	120	110	110	110	125	130	115	115	130
Product rate, % by wt of feed ..	45	48	44	47	46	50	51	41	47	47
Water content of feed, % by wt.	8.7	6.2	7.0	7.4	7.8	7.1	5.7	4.5	6.7	7.5
Mineral matter content by feed, % by wt	0.5	0.5	0.5	0.5	0.6	0.6	0.7	0.6	0.6	0.6
Water content of product, % by wt	nil	nil	nil	nil	nil	trace	trace	nil	nil	nil
Mineral matter content of product, % by wt	1.1	1.2	1.3	1.2	1.3	1.3	1.2	1.1	1.5	1.6
I.B.P. of product, °F	412	392	417	402	415	400	420	395	370	416
Percent by wt of product removable by Engler distillation up to 550°F	10.6	18.2	11.7	12.3	12.2	12.1	14.8	12.6	13.6	9.8
Product temperature, °F	395	420	425	420	410	450	400-500	500-535	515	520
Recirculation gas, column inlet temp, °F	515	515	515	520	520	520	520-560	535-585	575	585
Recirculation gas, column outlet temp, °F	330	375	370	355	370	360	310-410	440-460	420	425

In Experiment 20, where the most extensive topping took place, the distillate oil from the meter seal had a specific gravity of 0.865 and that from the decanter a gravity of 0.824, both at 60°/60°F. Sixty five per cent of the distillate oil recovered was collected at the decanter so that the specific gravity of the combined oil was 0.838 at 60°/60°F. Comparing this with the specific gravity of the original diluent, which was 0.809 at 60°/60°F, indicates that a portion of the bitumen was distilled off in the flash column.

A comparison of the distillation range of the distillate oil with the distillation range of the original diluent also bears this out as shown in Table 13.

TABLE 13

Engler Distillations of Kerosene Diluent and of Distillate Oil from Experiment 20

	Distillate Oil from Meter Seal	Distillate Oil from Decanter	Kerosene
	°F	°F	°F
I.B.P.	426	346	330
10% off	453	390	380
20% "	470	406	400
50% "	523	441	443
70% "	596	471	468
90% "	708	542	503
E.P.	738	612	540
Residue	3% by vol	4% by vol	2% by vol

Distillation of the product from Experiment 20 showed that 9.8 per cent was removable up to 550°F by Engler distillation.

Assuming that 12.0 per cent of bitumen is removable up to 550°F by Engler distillation, then all the diluent and 2.4 per cent of the bitumen had been removed.

Evaluation

Results from the flash dehydrator indicate that this type of apparatus is suitable for dehydrating and topping either as individual or as combined operations. If required, it appears that a flash dehydrator could take the product from the separation section, remove the water and diluent, and also remove a portion of the bitumen lower-boiling fraction sufficient to replace any reasonable diluent losses incurred in the separation section.

Maximum throughputs for this apparatus have not been ascertained. The maximum recirculation gas temperature employed in this work was 585°F. Subsequent work on the distillation of heavy crude oils (8, 9) has shown that gas inlet temperatures in excess of 1000°F are possible without significant cracking of the oil product taking place. However, under the mild conditions employed, maximum throughputs were of the order of 175 pounds per hour for dehydration of a feed containing 16 per cent water and 130 pounds per hour for dehydration of, and complete removal of diluent from, a feed containing 8 per cent water. Original design was based on the dehydration of an anticipated 100 pounds per hour of product from the cold water separation section containing 30 per cent water.

COKING

One of the two alternative procedures for coking was a conventional one for cracking heavy residues and tars using a Knowles oven. The other procedure deviated from conventional methods and employed a flash column similar in design to the flash dehydrator. Both units were designed to treat the anticipated product from the dehydration system consisting of 30 pounds of bitumen, 30 pounds of diluent and six pounds of mineral matter per hour. Actually, the product from the dehydration system contained considerably smaller proportions of diluent and mineral matter with a consequent larger proportion of bitumen.

These coking systems, which will be referred to as Knowles oven coking and flash coking respectively, will be separately described on the ensuing pages.

Knowles Oven Coking

The Knowles oven method of coking followed standard procedure for batch coking. Figure 9 is a detailed flow diagram of the process. The feed was pumped to the floor of the oven. Distillate vapours were drawn off to the condenser by a suction blower. Uncondensed gases were drawn through an entrainment separator by the blower and were then vented to the external atmosphere. The condensed oil passed to a storage drum and constituted the final oil

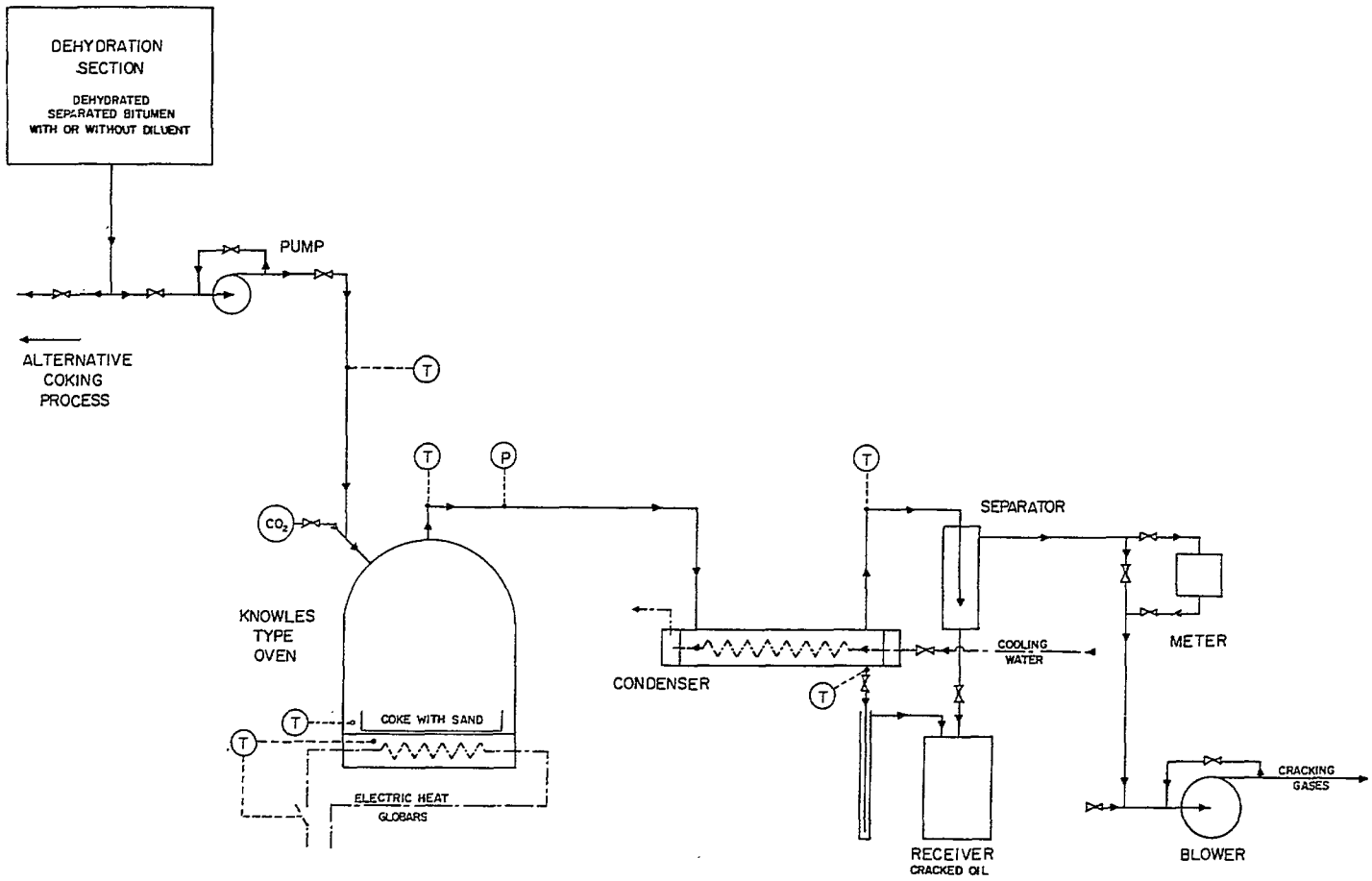

Figure 9 - Detailed Flow Diagram: Knowles Oven Coking

product, assuming previous recovery of the diluent fraction. Coke containing mineral matter, was left on the floor of the oven.

Description of Apparatus

The product from the dehydration section, with varying amounts of diluent removed, was transferred to an open 46-gallon feed drum mounted on a portable platform scale. Since, at room temperature, bitumen containing only small amounts of diluent is very viscous, it was necessary to heat the feed to permit pumping. This was done by means of three 500 watt strip heaters curved to encircle the drum to prevent local overheating, a propeller-type, top-entering mixer was used. Feeding was done by means of a 1/2-inch straight cut gear pump driven by a one half horsepower motor at a speed of approximately 300 revolutions per minute, with the rate of feed controlled manually by a by-pass valve.

Provision was made for using a rotameter type of flowmeter for measuring feed rates, but sufficient time was not available to adapt this meter to the feed, which was more viscous than originally expected. The feed rate was regularly checked by timing one or two pound increments on the feed-drum scales.

The Knowles oven was of brick construction. The interior floor was three feet wide and four feet deep. The height from the oven floor to the crown of the arch was three feet and the oven floor was itself three and one half feet above ground level. A steel shell

enclosed the oven at the bottom and extended one foot up the sides and back. The sides of the oven consisted of four and one half inches of clay firebrick (2600°F), two and one half inches of light weight insulating firebrick (2000°F) and one and one half inches of vermiculite block insulation (1800°F). The roof was a curved arch of clay firebrick (2000°F) covered by four and one half inches of insulating concrete (2000°F). This concrete was later replaced by rockwool batts to permit pointing some leaking joints in the arch brickwork. The door was a steel shell filled with a six inch thickness of light weight insulating concrete (2000°F). The door was arranged to be raised and lowered manually, and in operation was sealed with clay mortar and held tightly closed by means of wedges. The floor of the oven was made of lap-jointed carborundum tile two inches thick supported by carborundum blocks. In practice, with a fluid feed it was necessary to use a shallow steel tray on the floor to reduce leakage. A view of the Knowles oven is shown in Figure 10, with the door raised to show the interior.

Heat was provided electrically by six Globar heaters, one and one quarter inch in diameter, with an active heating length of 36 inches of high resistance silicon carbide. These Globars were contained under the tile floor in a chamber six inches deep, and they passed through walls of specially poured high temperature refractory cement (2800°F) to external connections. The heat input was controlled by a large magnetic contactor directly across the line, operated through

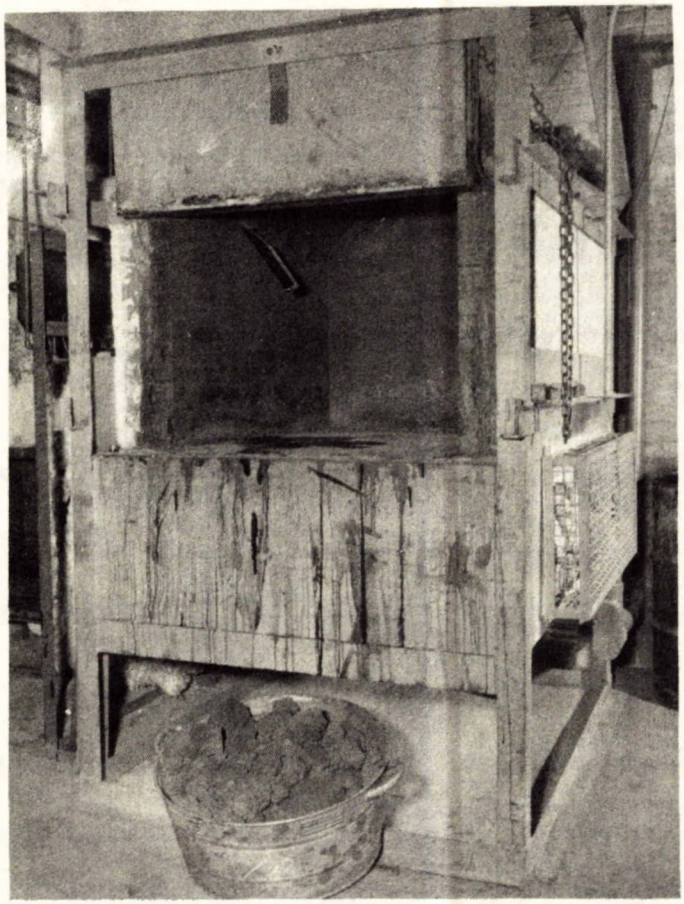

Figure 10 - Knowles Oven with Door Raised. A sample of coke is shown in the foreground.

a relay by a circular chart recording controller of the electronic continuous balance type. This controller was actuated by a platinum-platinum rhodium thermocouple in a sillimanite ceramic tube inserted directly in the Globar chamber. By manually operating two double-pole double-throw switches and one single-pole single-throw switch, it was possible to obtain six combinations of series and parallel

connections. This allowed the power input to be varied up to a maximum of 65 kilowatts without resorting to a multiple-tap transformer.

The feed to the oven passed at a uniform rate, through a 1/2-inch pipe inserted through one side of the arch and onto the tray on the oven floor. The charge temperature was obtained from an iron-constantan thermocouple inserted just above the floor at the rear of the oven. The vapours passed off to the condenser through a 3-inch pipe at the top centre of the oven. The condenser was a horizontal shell-and-tube type. The shell was 10 inches in diameter and seven and one half feet in length. The tubes consisted of a single pass of 21 brass tubes, one inch in diameter, provided with a floating header at the cool end to allow for expansion. The hot vapours were baffled through the shell outside the tubes and the cooling water passed through the tube bank counter-current to the hot vapours. The condensate - the cracked oil product or coker distillate - passed off continuously by gravity through a seal pot to a receiver. Vapours which did not condense in the condenser were vented to the atmosphere, after measuring their volume in a dry gas meter of the two-diaphragm type. Provision was also made to measure the volume of these gases with a 10 cubic foot meter prover. The condenser for this oven system is shown in the background of Figure 11.

After the feed was introduced into the oven, heating was continued until the rates of production of cracking gases and oil condensate became negligible. After the heat was turned off the

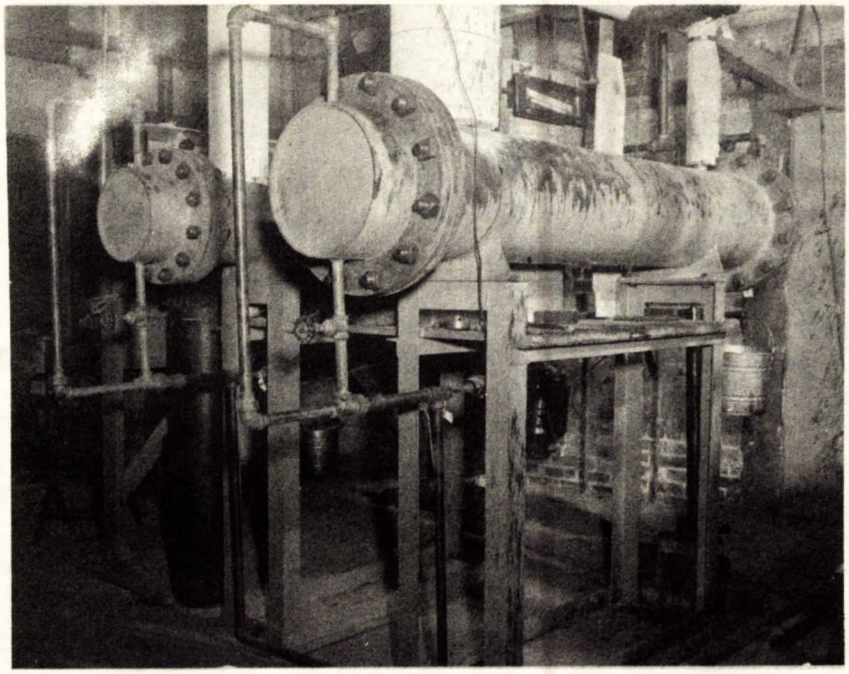

Figure 11 - Condensers for the Coking Systems. The condenser in the foreground is for the flash coker; the other is for the Knowles oven.

oven was left to cool to room temperature with the condenser water running. The oven was then opened and the tray containing the coke removed.

Experimental Operations

Only three complete coking experiments were conducted

employing the Knowles oven. In all of these experiments, there was considerable leakage through the oven brickwork and, even with the exhaust blower connected to the condenser to reduce the pressure inside the oven, the losses were extensive. However, all these losses were vapour or gas losses and the coke yields obtained were essentially unaffected by the vapour leakages. Analyses of the feeds and a summary of the operating conditions for the three experiments are given in Table 14.

TABLE 14

Feed Analyses and Operating Conditions:
Knowles Oven Coking Experiments

	Experiment Number		
	1	2	3
Mineral matter content of feed, % by wt	1.1	1.1	1.1
Water content of feed, % by wt	0.0	0.1	0.0
Diluent content of feed, % by wt	22.3	26.3	23.8
Bitumen content of feed, % by wt	76.6	72.5	75.1
Duration of feeding period, hr	1.7	3.0	5.3
Total weight of charge, lb	387	321	775
Rate of feed, lb/hr	225	107	146
Duration of coking period, hr	2.0	0.0	4.0
Duration of cooling period, hr	18.0	19.0	13.0
Temperatures, °F			
Feed	70	105	97
Oven at start of feeding period	640	721	790
Charge at start of coking period	747	1000	884
Charge at end of coking period	895	-	939
Vapours at start of coking period ...	520	710	670
Vapours at end of coking period	575	-	155

The yields and analyses of the distillate and coke recovered are shown in Table 15.

TABLE 15

Yields and Analyses of Products:
Knowles Oven Coking Experiments

	Experiment Number		
	1	2	3
Coke yield(a), % by wt of feed	11.4	10.6	12.6
Coke yield(b), % by wt of bitumen	13.7	13.6	15.4
Distillate yield, % by wt of feed	45.2	63.8	71.8
Distillate yield, % by wt of total oil in feed	45.7	64.6	72.7
Process losses(c), % by wt of feed	43.4	25.6	15.6
Ash content of coke, % by wt	6.5	5.8	7.1
Mineral matter content of coke(d), % by wt	7.5	6.7	8.2
Volatile content of coke(a), % by wt ...	-	7.4	14.4
Fixed carbon content of coke(a), % by wt	-	85.9	77.4
Sulphur content of coke(a), % by wt	-	6.0	5.2
Calorific value of coke(a), Btu/lb	-	13,355	13,350
Caking properties of coke residue at 950°C	-	agglomerate	non-agglomerate
Engler distillation range of distillate, °F	240-750	214-720	-
Engler distillation residue of distillate, % by vol	17.0	13.5	-

(a) On mineral-matter-included basis.
(b) On mineral-matter-free basis.
(c) Includes gases formed in process not condensable in condenser.
(d) Mineral matter to ash factor taken as 1.15 (10).

Evaluation

Results from the Knowles oven indicate that, with a feed containing 75 to 77 per cent bitumen, 24 to 22 per cent diluent and one per cent mineral matter, an amount of coke can be recovered equal to approximately 14 per cent of the bitumen in the feed. The calorific value of the coke, which contained approximately six per cent sulphur and seven to eight per cent mineral matter, was approximately 13,350 Btu/lb. No tests were run with the Knowles oven using a feed consisting essentially of undiluted bitumen.

A satisfactory estimate of the proportion of gas and liquid product formed was rendered impossible due to the high losses encountered in the limited number of test runs made. For the same reason, it was not possible to obtain significant analyses of these products. In general this method of coking was regarded as unsatisfactory due to the high losses which resulted from the difficulty in constructing a gas tight oven of this type.

Flash Coking

Figure 12 shows a detailed diagram of the flash cracking method of coking. A flash column similar in design to the flash dehydrator was employed. The feed was pumped into the top of the column and flowed down from plate to plate coming into contact with, and being treated by, hot hydrocarbon gases which entered at the

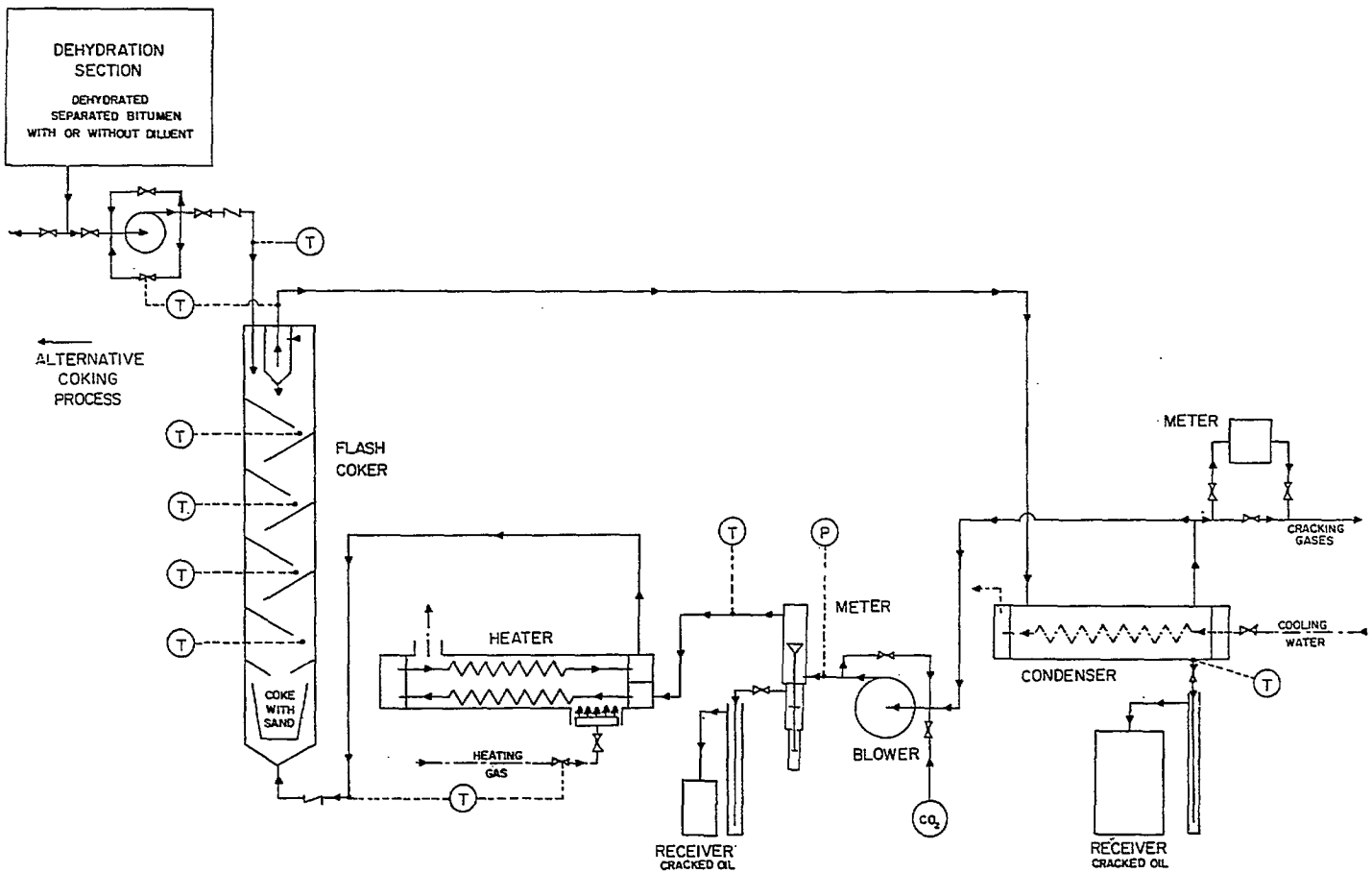

Figure 12 - Detailed Flow Diagram: Flash Coking

bottom of the column. Distillation and cracking took place and the products vapourized from the feed accompanied by the heating gases passed through an entrainment separator at the top of the column to a condenser. A constant volume gas-pump recirculated a portion of the uncondensed gases through the heater and back to the bottom of the column, while the balance was vented. The final oil product passed from the condenser through a vapour seal to the storage drum.

Description of Apparatus

Feeding procedure used for flash coking was identical to that used in feeding to the Knowles oven and is fully described on page 34.

The flash coker - see Figure 13 - was a vertical column 18 inches square and approximately 11 feet long, with its top 12 feet from the floor. It was insulated with four inch thick glass wool blankets. The feed entered at the top through a ball-type check valve in a 1/2-inch pipe, and was spread across the width of the column by a shallow trough. It then made its way down over a series of seven sloping plates and through a funnel which directed it into the coke container, where it remained as the cracking process was continued. The coke container was a vessel of approximately one cubic foot capacity. Four thermocouples were inserted at various heights in the column to indicate the temperature gradient. The sloping plates were adjustable to various angles between 15 and 35 degrees from

horizontal. The front of the column consisted of three cover plates which were bolted on and which permitted access to the interior of the column for inspection, for changing the slope of the plates, or for removing the coke container. Some difficulty was experienced with gaskets for these surfaces, at an operating temperature of about 1000°F, but one type of compressed asbestos fibre gasket (Durabla) proved satisfactory. The heating gases entered the column at the bottom centre through a check valve and 2-1/2-inch pipe. These gases encircled the coke container and swept up by the inclined plates. The resulting mixture of vapourized oil and heating gases passed through a cyclone type of separator which removed any entrained liquid and returned it to the column through the feed trough. The hydrocarbon vapours were then drawn overhead through a 2-1/2-inch pipe to the condenser.

Figure 13 shows the lower portion of the flash coking column, with the bottom cover-plate removed to show the coke receiver. It also illustrates the feeding arrangement used for both coking systems.

The condenser was a horizontal shell-and-tube condenser 14 inches in diameter and seven and one half feet long, with the hot gases baffled through the shell. The condenser water made a single pass through 118 brass tubes, five eighths inches in diameter, provided with a floating header at the cool end. Difficulty was experienced with season cracking of these tubes because of the presence of ammonia and the probable presence of amines, and it was necessary

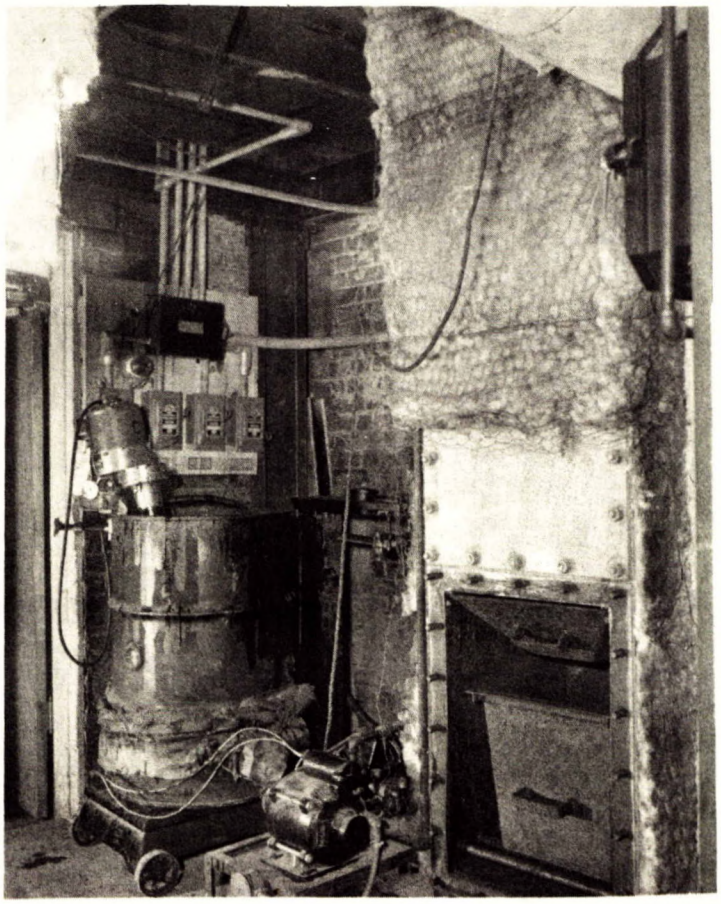

Figure 13 - Flash Coking Column with Bottom Plate Removed. The coke receiver is on the right. The feeding system is on the left.

to replace them with steel tubes. The cracked oil product passed off continuously by gravity through a seal pot to a receiver. The uncondensed gases passed off from the top of the condensate end of the condenser. That portion of the gases which was not recirculated by the gas-pump was vented to the atmosphere through a dry gas meter of the two-diaphragm type. Provision was also made in this line for gas

sampling. The condenser is illustrated in Figure 11.

The remainder of the gases were drawn to the gas pump through a 1-1/2-inch pipe line insulated with one inch of glass wool (Fiberglas) pipe insulation. The gas pump was identical in size and type to the one used for the flash dehydration system and was also provided with a by-pass valve to control the recirculation rate. This gas pump experienced no difficulties from high temperatures since, in this case, the gases had been cooled by passing through the condenser. Provision was made at the suction side of the gas pump for purging the system with carbon dioxide. On the pressure side a connection was made to a three foot mercury manometer to indicate the system's maximum pressure. From the gas pump the gases passed through a ratosleeve (variable area) type flowmeter with an underneath dashpot and a bottom indicating extension. The metering sleeve with float was mounted between two 5-inch pipe tees. The condensate which settled out at the float was drained off from the top of the dashpot chamber through a seal pot to a receiver.

After passing through the flowmeter, the gases entered the lower pass of a horizontal shell-and-tube heater. The latter was 16 inches in diameter and roughly seven and one half feet in length, with the heating gases baffled through the shell to the stack. The recirculated hydrocarbon gases made two passes, each pass through 17 steel tubes, seven eights inches in diameter. The tubes were fitted with a sliding header at the stack end. The shell was insulated with

six inch thick asbestos blocks. Heat was provided by city gas burned in a 21 inch diameter sectional atmospheric gas burner, with the pressure boosted slightly by a gas pump previously mentioned. A three foot water manometer gave an indication of burner pressure. Pilot protection was the same as for the smaller gas burner used in flash dehydration. The burner was controlled by a valve in the gas line operated by air pressure from an indicating controller, which was in turn actuated by a bulb inserted in the vapour line leaving the heater. When the temperature of these vapours exceeded the set point, the flow of city gas to the burner was reduced as required. The heater is visible in the background of Figure 8.

From the heater, the hot vapours were returned to the bottom of the flash column through a 2-1/2-inch pipe line insulated with two inches of high temperature insulation (Newtempheit) and two inches of 85 per cent magnesia.

After the feed had been charged, heating was continued during a coking period. At the end of this period the rates of production of cracked gas and coker distillate were negligible.

The bottom front panel of the column was removed when the apparatus had cooled sufficiently, and the coke box was taken out. The coke was transferred from the box by means of a removable bottom.

Experimental Operations

Six experiments were made with the flash coking unit. The

proportion of diluent in the feed varied somewhat from experiment to experiment, depending on the extent of the previous topping operations. Analyses of the feeds and a summary of the operating conditions for the six experiments are given in Table 16.

TABLE 16

Feed Analyses and Operating Conditions:
Flash Coking Experiments

	Experiment Number					
	1	2	3	4	5	6
Mineral matter content of feed, % by wt	1.1	1.1	1.3	1.4	1.3	1.3
Water content of feed, % by wt	0.2	0.2	0.0	0.0	0.0	0.0
Diluent content of feed, % by wt	29.5	29.5	6.8	2.0	0.6	3.5
Bitumen content of feed, % by wt	69.2	69.2	89.9	96.6	98.1	95.2
Specific gravity of feed at 60°/60°F	-	-	0.996	1.022	1.022	1.029
Specific gravity at 60°/60°F of fraction up to 550°F	-	-	0.84	0.85	0.85	0.87
Duration of feeding period, hr	1.0	3.0	2.7	2.3	3.2	3.4
Total weight of feed, lb	89	200	200	200	200	200
Rate of feed, lb/hr	89	67	74	87	63	59
Duration of coking period, hr	1.3	4.0	7.3	3.6	3.0	3.1
Temperatures, °F						
Feed	64	67	160	180	170	175
Recirculation gases at tower inlet						
, at start of feeding period	941	961	868	952	994	952
, at end of feeding period	915	882	808	1005	1009	985
, at end of coking period	-	964	871	1040	1019	1019
Recirculation gases at tower outlet						
, at start of feeding period	592	618	464	323	557	445
, at end of feeding period	508	600	445	505	650	600
, at end of coking period	-	722	711	779	819	760

The residue in the bottom of the column following Experiment 1 was a very hard pitch when cooled to room temperature. The residue from each of the other five experiments was a hard compact coke. The yields and analyses of the residue and distillate produced are given in Table 17.

TABLE 17

Yields and Analyses of Products: Flash Coking Experiments

	Experiment Number					
	1	2	3	4	5	6
Pitch or coke yield(a), % by wt of feed	23.6	11.0	17.0	16.0	17.0	17.0
Pitch or coke yield(b), % by wt of bitumen	32.7	13.2	16.9	15.0	16.0	16.5
Distillate yield, % by wt of feed	65.2	85.5	76.0	75.0	74.5	74.5
, % by wt of total oil in feed	66.0	86.5	76.8	75.9	75.3	75.3
Gas yield, % by wt of feed	-	-	4.2	6.2	6.4	5.6
, % by wt of bitumen	-	-	4.6	6.4	6.5	5.9
Unaccounted for losses, % by wt of feed	11.2(c)	3.5(c)	2.8	2.8	2.1	2.9
Ash content of pitch or coke, % by wt	3.4	7.9	7.2	7.7	6.4	6.6
Mineral matter content of pitch or coke (d), % by wt	3.9	9.1	8.3	8.9	7.4	7.6
Volatile content of coke(a), % by wt	-	17.2	28.7	15.7	11.8	14.5
Fixed carbon content of coke(a), % by wt	-	73.7	63.0	75.4	80.8	77.9
Sulphur content of coke(a), % by wt	-	6.6	6.9	7.1	6.7	6.8
Calorific value of coke(a), Btu/lb	-	13,605	14,310	13,818	13,710	14,015
Caking properties of coke residue at 950°C	-	non agglom	good	non agglom	non agglom	non agglom
Engler distillation range of distillate, °F	296-700	348-745	-	-	-	-
Engler distillation residue of distillate, % by vol	9.0	25.0	-	-	-	-
Specific gravity of distillate at 60°/60°F	-	-	0.92	0.93	0.93	0.94

(a) On mineral-matter-included basis.
(b) On mineral-matter-free basis.
(c) Includes gases formed in process not condensable in condenser.
(d) Mineral-matter to ash factor taken as 1.15 (10).

Engler distillations to 550°F were made on the feeds and distillate products of Experiments 3, 4, 5 and 6. The Engler distillation products were collected into two fractions, one consisting of distillate up to 400°F and the other of distillate recovered between 400°F and 550°F. The increases in the amounts of material boiling in these ranges were calculated on the basis of 100 pounds of bitumen feed. The results are shown in Table 18.

TABLE 18

Results of Engler Distillations of Feeds and Distillate Products: Flash Coking Experiments 3, 4, 5 and 6

Experiment No.	Fraction up to 400°F			Fraction 400-550°F			Fraction up to 550°F		
	% by vol of feed	% by vol of product	Increase in lb/100 lb of bitumen	% by vol of feed	% by vol of product	Increase in lb/100 lb of bitumen	% by vol of feed	% by vol of product	Increase in lb/100 lb of bitumen
3	2.1	4.8	1.7	15.9	29.8	7.3	18.0	34.6	9.0
4	0.5	4.1	2.7	13.3	19.4	1.2	13.8	23.5	3.9
5	0.0	5.5	4.2	12.5	19.4	2.0	12.5	24.9	6.2
6	0.0	5.3	4.2	15.1	19.2	(-) 0.8	15.1	24.5	3.4

Analyses of the feed, coke and distillate from Experiment 6 gave the following sulphur percentages:

Feed 5.3%

Coke 6.8%

Distillate 4.0%

Therefore, on a basis of 100 pounds of feed we have the

following sulphur distribution:

Feed	5.3 pounds
Coke	1.2 pounds
Distillate	3.0 pounds

The remaining sulphur amounting to 1.1 pounds is located in the cracking gases and in the unaccounted for losses.

Assuming the percentage of sulphur in the unaccounted for losses as 5.3, the same as in the feed, then the sulphur in these losses amounted to 0.2 pounds. Thus, the total sulphur balance is:

Feed	5.3 pounds
Coke	1.2 pounds
Distillate	3.0 pounds
Cracking gases	0.9 pounds
Losses	0.2 pounds
	5.3

The gases amounted to 5.6 per cent by weight of the feed. Therefore, the total sulphur in the gases, calculated as hydrogen sulphide, was 17.0 per cent by weight.

The composition of the gases is given in Table 19.

TABLE 19

Composition of Cracking Gases:
Flash Coking Experiment 6

Constituent	Percent by Vol	Percent by Weight
Methane	21.7	12.5
Ethylene	5.1	5.1
Ethane	13.3	14.2
Propylene	8.7	13.0
Propane	5.6	8.7
Iso-Butane	1.3	2.8
N-Butane	5.6	11.5
Iso-Pentane	2.8	7.1
N-Pentane	1.2	3.0
Hydrogen	17.1	1.2
Carbon Monoxide	3.9	3.9
Hydrogen Sulphide	13.7	17.0
Total	100.0	100.0

The calculated density of the gases, at 32°F and one atmosphere pressure, was 0.078 pounds per cubic foot. A calculation of the calorific value of the gases gave 17,598 Btu/lb.

Evaluation

The flash cracking method of coking had two main advantages over the Knowles oven method. Firstly, it was easier to obtain and maintain a gas-tight system. Secondly, the danger of fire was considerably less as the probability of leakage of oil or vapour onto the globar heating elements of the Knowles oven presented a constant hazard.

Results from the flash cracker indicate that, with a feed similar to that used in the Knowles oven tests, the coke produced was very similar in quality and quantity. With a feed containing 69 per cent bitumen, 30 per cent diluent and one per cent mineral matter, the coke recovered amounted to 13 per cent of the bitumen in the feed. The calorific value of the coke was 13,605 Btu/lb. The sulphur content was seven per cent and the mineral matter content was nine percent.

Decreasing the proportion of diluent in the feed apparently increased the amount of coke produced as a percentage of the bitumen in the feed. In four successive runs with a feed having a bitumen content varying between 92.1 per cent and 98.3 per cent and averaging 95.5 per cent, the mineral-matter-free coke recovered varied between 15.0 per cent and 16.9 per cent of the bitumen fed, averaging 16.1 per cent.

The calorific value of the coke recovered varied between 13,710 and 14,310 Btu/lb, and averaged 13,963 Btu/lb. The average sulphur content was 6.9 per cent and the average mineral matter content was 8.1 per cent. An average proximate analysis was:

Ash	7.0%
Volatile	17.7%
Fixed carbon ..	75.3%

The distillate recovered, correcting for the contained diluent

which was assumed to distill over unaltered, had a sulphur content of four per cent and varied between 74.4 per cent and 75.4 per cent of the bitumen fed, averaging 74.9 per cent. The specific gravity of the distillate, corrected for the contained diluent, averaged 0.93 at 60°/60°F corresponding to an A.P.I. gravity of 20.7.

The cracking gases formed averaged 5.9 per cent of the bitumen fed, with a calculated gas density of 0.078 pounds per cubic foot at 32°F and one atmosphere pressure. The calorific value of the cracking gases was calculated to be 17,598 Btu/lb.

ACKNOWLEDGMENTS

The authors wish to express their appreciation to M.P. Pleet and M. Scovell for their assistance in the operation of the experimental plant. They also wish to acknowledge the contribution of L. Labelle and G. Hinton who installed the many component parts of the complete plant. The analytical work was done by the Liquid and Gaseous Fuels Analyses Section and the Solid Fuels Analyses Section. Flow sheets in the text were drawn by R. Taylor.

REFERENCES

1. L. E. Djingheuzian, Pilot Plant Investigations on Cold Water Separation of Bitumen from Alberta Tar Sands. Mineral Dressing and Process Metallurgy Division Research Report MD 70 (1950).

2. F. E. Goodspeed, J. G. Holland, R. G. Draper, and H. McD. Chantler, The Cold Water Process for the Recovery of the Bitumen from the Bituminous Sands of Alberta - 1. Sampling Procedure and Analytical Methods for the Control and Evaluation of the Pilot Plant Operation. Fuels Division report FRL 260 (1957).

3. F. E. Goodspeed, J. G. Holland, R. G. Draper, and H. McD. Chantler, The Cold Water Process for the Recovery of the Bitumen from the Bituminous Sands of Alberta - 2. Tabulated Summary of all the Analytical Results Associated with the Control and Evaluation of the Pilot Plant Operation. Fuels Division report FRL 264 (1957).

4. D. S. Montgomery and M. P. Pleet, The Cold Water Process for the Recovery of the Bitumen from the Bituminous Sands of Alberta - 3. The Evaluation of Surface Active Agents for Use in the Cold Water Separation Process. Mines Branch Investigation Report 58/41 (1958).

5. M. J. Sterba, Thermal Coking of Oil from Alberta Bituminous Sand. Proc. Athabasca Oil Sands Conf., Edmonton, 257-270 (1951).

6. E. J. Burrough, Can. Pat. No. 7513 and U.S. Pat. No. 460, 314 (1943).

7. P. V. Rosewarne, H. McD. Chantler, and A. A. Swinnerton, Analyses of Canadian Crude Oils, Naphthas, Shale Oil, and Bitumen. Mines Branch report 765 (1936).

8. F. L. Booth, R. E. Carson and D. S. Montgomery, The Production of Hard Pitch from Lloydminster Crude Oil - Interim report 1. Fuels Division report FRL 200 (1955).

9. F. L. Booth, R. E. Carson and D. S. Montgomery, The Production of Hard Pitch from Lloydminster Crude Oil - Interim report 2. Fuels Division report FRL 204 (1955).

REFERENCES (Concluded)

10. K. W. Bowles and F. L. Booth, Study of the Composition of the Separated Bitumen from Alberta Bituminous Sands. Fuels Division report FRL 76 (1947).

oooooooooooooooo
oooooooooooooo
oooo

FLB:REC:EJB:TEW:LC

THE QUEEN'S PRINTER AND CONTROLLER OF STATIONERY
OTTAWA, 1959