Energy, Mines and Resources Canada
Énergie, Mines et Ressources Canada

CANMET
Canada Centre for Mineral and Energy Technology
Centre canadien de la technologie des minéraux et de l'énergie

GASEOUS FUELS FROM COAL

G. N. BANKS

MARCH 1979

Prepared for publication in "The Northern Miner"

ENERGY RESEARCH LABORATORIES
ENERGY RESEARCH PROGRAM
REPORT NO. ERL/ERP 79 - 12 (J)

GASEOUS FUELS FROM COAL

by

G.N. BANKS

ABSTRACT

Recent predictions of future world-wide energy shortages in oil and gas supplies have increased world interest in the technology of coal processing and utilization. Processing of coal in an economic and environmentaly acceptable manner could augment these conventional sources of energy. Although Canada's domestic reserves of oil and gas are comparatively large, they are not unlimited and it is estimated that by the year 2000, at least 20% of Canada's primary energy budget must be derived from their coal resources. This paper outlines some of the basic chemistry involved in coal gasification, a brief history of it's commercial application and a summary of one aspect of the Canadian Federal Governments present involvement in establishing a coal-alternative answer to Canada's future energy requirements.

* Research Scientist, Coal Resource and Processing Laboratory, Energy Research Laboratories, CANMET, Department of Energy, Mines and Resources, Ottawa, Canada.

C O N T E N T S

F I G U R E S

INTRODUCTION

Indirect burning of coal, as compared to direct burning, involves converting the coal energy into another, more convenient form, such as coal-gas. The first commercial coal-gas industry was initiated by W. Murdock, who, in 1792, generated coal-gas by carbonization and used it to light a room in his home in Redruth, England. Coal-gas, for lighting purposes, was gradually replaced by electricity, but it eventually became a major source of domestic and industrial fuel in Britain. Carbonization converts about 25% of the coal to gaseous fuel with a calorific value of about 20 MJ/m^3, leaving coke as a by-product. This process thus requires good quality coals as well as a ready market for coke. Hence, when good coking coal was not available, alternate methods for gasifying coals were required.

In 1861 the Siemens Brothers in Germany were successful in developing a process which completely gasified non-coking coals. This process consisted of passing air and steam through a bed of hot coal to produce a gas of low calorific value (about 5 MJ/m^3), which was suitable for industrial heating purposes. In the 1880's, L. Mond of England developed a gasification process (using steam and air) and added subsequent treatment with sulphuric acid to produce ammonia and low calorific value "producer" gas. The process was later adapted to gasify peat and brown coal, and plants were installed throughout Britain and Europe as well as several in the United States and Japan. The chief disadvantage of these processes were the poor thermal efficiency (about 60%) and the low calorific value of the product gas. Many attempts were made to completely gasify a non-coking coal and produce a gas of coal-gas standard (20 MJ/m^3), but these attempts were not successful until the late

1920's when the German firm of Lurgi replaced air by oxygen in coal gasification. The first commercial Lurgi gas generator was built in 1936. In this process, the coal was gasified with steam and oxygen at pressures between 2 and 3 MN/m^2, producing a gas with a calorific value of about 15 MJ/m^3. Approximately 66% of the potential heat in the coal is produced as gas. This gas can be readily enriched to the coal-gas standard through the addition of suitable hydrocarbon gases.

In the early 1960's the availability of suitable cheap coals in Britain was declining and the gas industry began to change to oil as it's main fuel source. By 1965 over 50% of the gas in Britain was being manufactured from oil. In the late 1960's natural gas was discovered in the North Sea and by 1977 less than 5% of the total gas utilized in Britain was manufactured from oil.

A similar pattern has emerged in most of the European countries. In North America, particularly in the U.S. market, the preferential use of natural gas is causing demand to outstrip supply. It has been suggested that in the near-term, the U.S. energy producers are planning to use oil-gasification to augment natural gas supplies and in the long-term they are looking towards coal-gasification as a solution. The size of the Canadian natural gas reserves and the rate of consumption indicates that although this country could eventually arrive in a similar situation, the prospect is much more distant.

THE CHEMISTRY OF COAL GASIFICATION

An important factor in the production of gaseous fuels is the hydrogen/carbon (atomic ratio) of the raw materials and of the product gases. The feedstocks, arranged according to their H/C atomic ratios, range from coke (0.13), charcoal (0.32), anthracite (0.38) on the lower extreme to liquified natural gas (3.43) and methane (4.0), with the highest H/C atomic ratio. The product gases range from blast furnace gas (0.11), producer gas (0.7 - 1.0), blue water-gas (2.04) to coke-oven gas (4.71), natural gas (3.88) and substitute natural gas (3.99). The process of gasification involves an increase in H/C atomic ratio by addition of

hydrogen or rejection of carbon, or both. Pyrolysis, like coal carbonization, rejects carbon, but the process is inefficient and the better approach is to add hydrogen. Hydrogen can be produced by reacting steam with hot carbon; the oxygen from the steam combines with the remaining carbon to produce carbon dioxide. This process not only involves the addition of hydrogen, but the rejection of carbon. The weight of steam that has to be decomposed and the weight of carbon dioxide removed increases as the H/C atomic ratio of the feedstock decreases.

Industrial gases consist of various proportions of three types of gases:

(a) A lean component consisting of carbon monoxide or hydrogen, or both, with a gross calorific value of about 12 MJ/m^3

(b) A rich component consisting of low molecular weight gaseous hydrocarbons, with a gross calorific value greater than 37 MJ/m^3

(c) An inert component consisting of carbon dioxide or nitrogen, or both.

Thus, low grade gases (e.g. blast furnace gas and producer gas) contain a major proportion of inert gas (greater than 50%) and have a gross calorific value less than 6 MJ/m^3. The high-grade gases (e.g. natural gas and substitute natural gas) consist almost exclusively of the rich hydrocarbon component with a gross calorific value of 37 MJ/m^3. The medium-grade gases (e.g. blue water-gas, carburetted water-gas, lurgi gas and coke-oven gas) represent the transition between the low and high-grade gases.

The primary process in gasification is a heterogeneous reaction between carbon and oxygen, steam or carbon dioxide. Air and hot carbon react to produce a mixture of CO_2, CO and N_2. If air only is used, the fuel bed in the gas generator cannot be kept cool and the ash melts to form clinkers. The action of steam on hot carbon moderates the temperature to reduce clinker formation and the steam is simultaneously decomposed by the carbon to produce a mixture of CO_2, CO and H_2 gas.

Producer gas, generated by the partial combustion of carbon with air, consists mainly of CO and N_2 with small proportions of H_2 (introduced into the gasifier by the moisture contained in the fuel and air and arising from the water-gas reactions). It also contains small quantities of methane (CH_4) and carbon dioxide (CO_2), arising from methane synthesis reactions, water-gas reactions and from devolatilization, when coal is used as a fuel. The theoretical composition of producer gas is about 1/3 CO and 2/3 N_2, with about 72% of the potential heat of the gasified carbon appearing as potential heat in the producer gas. This is known as the cold-gas efficiency. Sensible heat and heat losses account for the remaining 28% heat value. If the producer gas can be used without cooling, this sensible heat can be utilized, and the system will have an efficiency greater than 90% (known as the hot-gas efficiency). The utilization of steam in the gasifier can increase the calorific value of the gas, increase the cold-gas efficiency and lower the risk of clinker formation.

Substitution of oxygen for air in an air-steam gasifier increases the calorific value of the gas from 6.2 MJ/m^3 to 12.64 MJ/m^3 and the cold-gas efficiency (thermal efficiency) from 71.8% to 75.5%. These changes are due to the elimination of the inert gas, nitrogen, from the product.

Increasing the gasification pressure retards the reduction of CO_2 to CO but enhances the conversion of carbon to methane as shown in Figure 1. Methane formation is a strongly exothermic reaction and reduces the consumption of oxygen. Gas volumes decrease with increasing pressure and higher gasification rates are possible with small sized condensation-purification equipment than in equivalent atmospheric-pressure gasifiers. Substitute natural gas (with a calorific value of 36.5 MJ/m^3) can be produced from these medium-grade gases by final purification and methanation.

COAL GASIFICATION PROCESSES

Coal gasification processes for the production of low and medium grade fuel gases can be readily divided into three major classifications, according to the type of coal bed or suspension used in the gasifier. These are fixed-bed gasifiers, fluidized-bed gasifiers and entrained-bed gasifiers.

Fixed-Bed Gasifiers

In the fixed-bed gasifier, sized coal is fed to the top of the gasifier and moves slowly downward in a bed, which is maintained at a constant depth on a grate. Steam and air (or oxygen) pass upward and through the bed. This type of gasifier is also referred to as a moving bed or gravitating bed.

At the bottom of the bed, carbon reacts with oxygen to form carbon dioxide in a thin oxidation zone, above which the endothermic carbon-steam and carbon-carbon dioxide reactions initiate the formation of carbon monoxide and hydrogen. Through the diluent action of steam in the oxidation zone and heat radiation from this zone to the reduction zones, the bottom-bed temperature is maintained below the ash fusion temperature, thereby controlling clinker formation. A slagging mode of operation can be obtained through the use of a lower steam-air or steam-oxygen ratio input to the bottom of the bed. As the hot combustion gases flow upward through the bed, the endothermic reduction reactions forming carbon monoxide and hydrogen continue in a ratio dictated by equilibrium in the water-gas shift reaction among carbon monoxide, carbon dioxide, steam and hydrogen. The raw coal undergoes drying, devolatilization, and reaction with oxygen and steam, while the volatiles crack to form hydrogen, methane and higher hydrocarbons. The residual material is discharged at the bottom of the bed as dry ash or slag. The net reaction in the bed above the combustion zone is endothermic and the gases leave the top of the bed at a moderate temperature of about 500°C. Because of the counter-current flow of gas and coal, the heat economy in the fixed-bed gasifier is excellent and the solids residence time is long enough to give high carbon conversion.

The gasifier operations are relatively simple and the technology is well developed, but the softening, sticking and swelling behaviour as well as high tar production from some coals in the upper regions of the bed cause serious problems with solids caking and gas channeling. This becomes increasingly troublesome at higher operating pressures. The formation of clinkers in the lower part of the bed can also be a problem. Another disadvantage of this process is the necessity to use a sized or agglomerated coal feed to obtain maximum unit production.

The Lurgi fixed-bed gasifier is probably the best known commercial application of this process (see Figure 2).

Fluid-Bed Gasifiers

In the fluidized-bed gasifier, the maximum coal particle size is much smaller than in the fixed-bed operation and the gas is passed up through the bed with a velocity high enough to fluidize the solid particles. Since the gas and solid phases are well mixed, the temperature of the exit gas is about equal to that of the bed, and more heat is carried from the bed in the off-gas than is the case for the fixed-beds. The large solids inventory of fluidized-bed gasifiers ensures reducing conditions at all times and minimizes the possibility of oxidation if the coal feed is suddenly interrupted. This promotes safe and stable operation, but the operating conditions are limited by the fluidization characteristics of the fuel.

The fluidized-beds are well suited for continuous gasification at high coal feed rates. The excellent heat and mass transfer characteristics promote uniform bed temperatures which minimize the possibility of local over-heating and clinker formation, while permitting reaction rates that lead to high coal feed rates per unit volume of reactor. In comparison with fixed-beds, fluidized beds generally have more carry-over of solids, less soot and tar production and lower gas heating value (due to a smaller yield of hydrocarbon gases).

Fluidized-bed gasifiers use a wide range of coals, but caking coals, which can agglomerate in the bed and lead to loss of proper fluidization, require pretreatment. The most common type of pretreatment is mild oxidation, usually with heated air in a fluidized-bed. In the dry-ash operation of the fluidized-bed gasifier, the bed temperature is held below the ash-softening temperature so that most of the ash is carried out of the bed with the off-gas and subsequently collected, while part of the ash is removed by a drain-off mechanism from the bottom of the bed. In ash-agglomerating beds, the bed temperature is held near the ash-softening temperature so that the ash will form low-carbon-content agglomerates that settle to the bottom of the bed and are continuously removed.

In some modified versions of the agglomerating ash process, the introduction of calcium-bearing stone (usually limestone or dolomite) has been used to capture sulphur as calcium sulphate, which is then extracted with the ash. Up to 90% of the sulphur in the coal feed can be recovered in this manner, thus reducing the off-gas sulphur content.

The Winkler fluidized-bed gasifier is probably the best known application of this process (see Figure 3).

Entrained-flow Gasifiers

In the entrained-flow or suspended-flow gasifier, pulverized coal is injected into the gasifier in concurrent flow with the gases. Since flow is concurrent, the reaction rate decreases as the particles pass through the reactor, and high temperatures as well as high oxygen/steam ratio are required to obtain complete gasification. At these high temperatures little or no tar and very little methane are produced in the exit gases, which contain a considerable amount of fine residual particles.

The advantages of the entrained-flow gasifiers is that all types of coal can be used, the reaction rate is high and consequently the throughput per unit volume of gasifier is higher than can be achieved in either the fixed-bed or fluidized-bed units and there is very little tar production in the system. The disadvantages are the large carry-over of fine particles which require a dust separator, the short refractory life of the reactor due to the high temperatures and particle erosion, and the need of a heat recovery system on the exit gases for heat economy. Because of the high reaction rate required, oxygen rather than air is the preferred gas feed although encouraging results have been obtained with some air-blown gasifiers.

The Koppers-Totzek, atmospheric pressure, oxygen-blown, entrained-flow slagging gasifier is probably the best known commercial application of this process (see Figure 4).

THERMAL COAL UTILIZATION IN THE CANADIAN CONTEXT

A major target for the Canadian energy industries is to overcome our growing dependence upon imported oil. The Department of Energy, Mines and Resources, in it's "Energy Strategy for Canada - 1976", set a target for keeping net oil imports to a maximum of one third of the domestic market or 800,000 barrels a day, whichever is lower. In addition to the possibilities of new oil supplies from Canada's frontier region, the accelerated development of the oil sands and heavy oils of Alberta and Saskatchewna, a higher extraction rate of natural gas from the established producing regions and the expanded nuclear generation of electricity to meet this target; Canada also has the option of developing the technology to increase the utilization of its large coal reserves. Although the exact amounts of demands and reserves which will determine the dates at which fuels will no longer be sustainable are not definite, enough is known to determine the approximate time-frame for the depletion of the domestic supplies. The comparative sustainabilities (in years) are: conventional oil (10), on-shore natural gas (25), oil sands and heavy oil (50) and mineable coal (100). It is evident, from these figures that coal must play an increasingly more important role in Canada's future energy supply.

The 1976 estimate of coal reserves in Canada was 28,940 million tonnes (proven) and 164,663 million tonnes (inferred). These figures should be considered as present established values which will no doubt increase as more information becomes available. The 1977 coal production in Canada was about 29 million tonnes, while coal consumption was about 30 million tonnes (making Canada a net importer of coal). Most of this imported coal is of U.S. Appalachian origin for consumption in southern Ontario. The total coal consumption represented 9% of Canada's primary energy budget of 8.3 quads (1Q - 10^{15} BTU or approximately 10^{12} MJ) in 1977.

Investigations in the United States indicate that the optium size for commercial gasifying plants producing substitute natural gas from a coal feed, is about 8 million cubic meters of gas per day. A plant of this size would require at least 5 million tonnes of bituminuous coal per year and over a normal plant life of 30 years, 150 to 300 million tonnes

of coal (depending on rank and quality) would be required. The amount of water required in this plant is roughly the same as the amount of coal. Using these constraints, there are only about 10 sites in Canada where sufficient coal (not allocated for other purposes) exists for the construction of such gasifying plants.

It should be noted that these 10 sites would produce nearly one trillion cubic metres of substitute natural gas over their lifetime. This is about the same quantity as the present total established reserves of natural gas in the MacKenzie delta and other frontier regions.

In order to formulate a coal-alternative answer to Canada's future energy requirements, the Department of Energy, Mines and Resources have suggested five strategy categories. These are:

1. The development of high-performance coal-to-electricity processes, such as gasification -combined-cycle, especially as applied to the low-rank coals of Western Canada.
2. The substitution of coal for imported oil in Eastern Canada, chiefly by utilities and industries.
3. The use of coal in the production of fuels for transportation by (a) utilizing coal in heavy oil and oil sands processing to maximize oil yields as well as (b) the direct production of liquids from coal.
4. The use of coal in utilities and industry for such related purposes as in co-generation and in district heating schemes.
5. The production of substitute natural gas from coal, and the related technologies of methane drainage from coal seams and underground gasification of coal (in-situ gasification).

CURRENT CANADIAN PROJECTS AND STUDIES IN THE FIELD OF COAL GASIFICATION

In House Facilities

In support of the studies on low and medium energy gasification processes, the Canada Centre for Mineral and Energy Technology (CANMET), Department of Energy, Mines and Resources, is establishing an experimental facility to evaluate Canadian coals. This facility includes:

1. a fixed-bed gasifier, capable of operating at atmospheric pressures up to a maximum temperature of 1200°C and a maximum reactor charge of 10 kg.
2. a thermobalance reactor, designed to operate at maximum conditions of 2500 psi and 1000°C, using small coal samples and,
3. a continuous gasifier, designed to operate at conditions of 2500 psi and 1000°C, treating 150 g/min of coal.

This equipment will be used to determine the kinetic rates, product qualities and yields from pitch, bitumen, oil and coal under a range of conditions, either in the fixed, fluidized or entrained bed mode of gasification. The basic flow diagram of the atmospheric gasification facility, being constructed at CANMET, is given in Figure 5. Initial tests, leading to the commissioning of this unit, were begun in February, 1979, with the expectation that the unit would be fully operational during May, 1979. The second and third experimental systems will come on stream later in the year.

Contract Research Programs

The Department of Energy, Mines and Resources is also funding the construction of a laboratory fixed-bed reactor at Carleton University (Ottawa) and a "spouted-bed" reactor at the University of British Columbia. The "spouted-bed" reactor, originally invented in Canada for the gasification of caking coals, has been evaluated for coal gasification processes in Australia. The British Columbia Research Council is studying the gasification of colliery middlings, using a process of their own design, directed towards providing hot gases for drying coal.

The Saskatchewan Power Corporation, with Federal support, has been conducting technical and economic studies of coal gasification based on coal deposits in the Saskatchewan area. This project includes a review of the technology and economics for producing medium and pipeline quality gases from lignite coals, economic evaluation of the transmission and storage of these gases for use in Saskatchewan industries and utilities, and an investigation of the technical modifications necessary to make use of the medium quality gases with an evaluation of the economic effect of such modifications on the marketability of the gas. They are also conducting studies in the assessment of processes for electric power generation, using coal-gasification, combined-cycle techniques, with minimum water requirements.

In cooperation with EMR and the Alberta Department of Energy and Natural Resources, Shell Canada Resources Ltd., assessed the conversion of coal in the Edmonton/Fort Saskatchewan region of Alberta for the production of fuel gas, useful for a number of industrial applications in the region. Algas Resources Ltd., in cooperation with EMR, conducted studies on processes applicable to low-rank Canadian coals which would produce marketable products such as SNG, low quality gas, hydrogen, ammonia, liquid fuels and chemical feedstocks. The British Columbia Hydro-Electric Power Authority, with federal support, examined the possibility of using fluid-bed gasification, combined-cycle processes to produce electric power from low grade B.C. coals and coal wastes.

In the related technology of underground coal gasification and methane drainage, a series of cooperative industry/government trials of underground coal gasification has been managed by the Research Council of Alberta and consideration has been given to methane drainage studies by several organizations.

RETROSPECT AND PROSPECT

During the past three years the Canadian Federal Government, through the Department of Energy, Mines and Resources Coal Conversion Program, have invested over 2 1/2 million dollars in cooperative programs with Canadian Industries, Research Establishments and Universities. These programs comprised 32 projects which were concerned with coal combustion,

coal gasification and coal liquefaction technologies, as applied to Canada's Coal Utilization Program. Although Canada's energy resource and demand situation is quite unique in the world, in that it is not yet as critical as that of many industrial nations, some studies have indicated that before the turn of this century at least 20% of Canada's primary energy budget must be derived from coal resources.

This is a substantial increase from the present level of 9% and will demand a substantial increase in the introduction of new and efficient technology for coal utilization.

FIGURE 1

EFFECT OF OPERATING PRESSURE ON GAS COMPOSITION

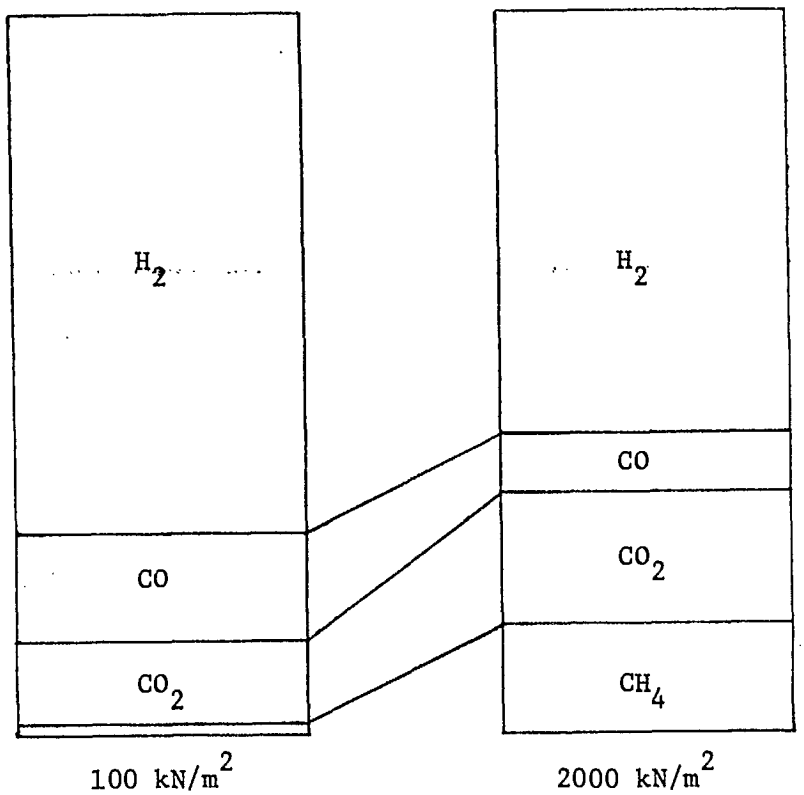

FIGURE 2

LURGI FIXED-BED GASIFIER

REACTOR	TEMP. (°F)	PRESSURE (psi)	REACTANTS	PRODUCT (OFFGAS)
FIXED BED	1140—1400	350—450	COAL-STEAM-O_2	450 BTU/S.C.F.

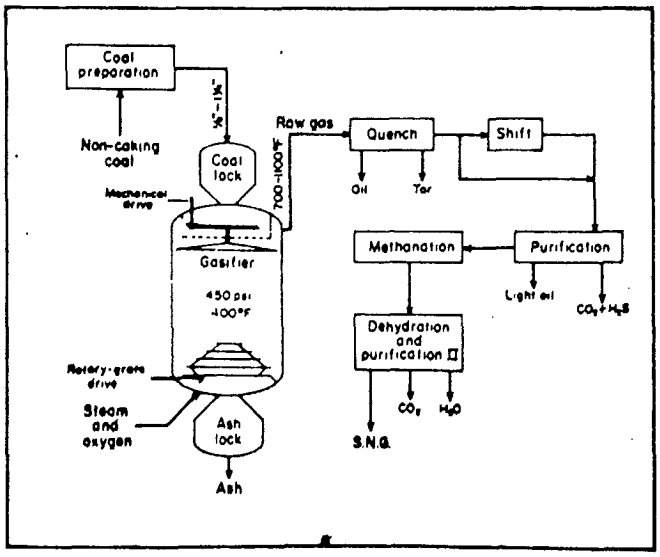

The first commercial plant was constructed in 1936. To date, 14 commercial plants have been built. About 30 Lurgi-based S.N.G. plants are planned in the U.S.A. with the first expected on stream in 1978. Expansion of the Lurgi-based SASOL plant in South Africa is planned.

FIGURE 3

WINKLER FLUIDIZED-BED GASIFIER

REACTOR	TEMP. (°F)	PRESSURE	REACTANTS	PRODUCT GAS (RAW)
FLUIDIZED BED	1500—1800	ATMOSPHERIC	COAL-STEAM-O_2	275 BTU/S.C.F.

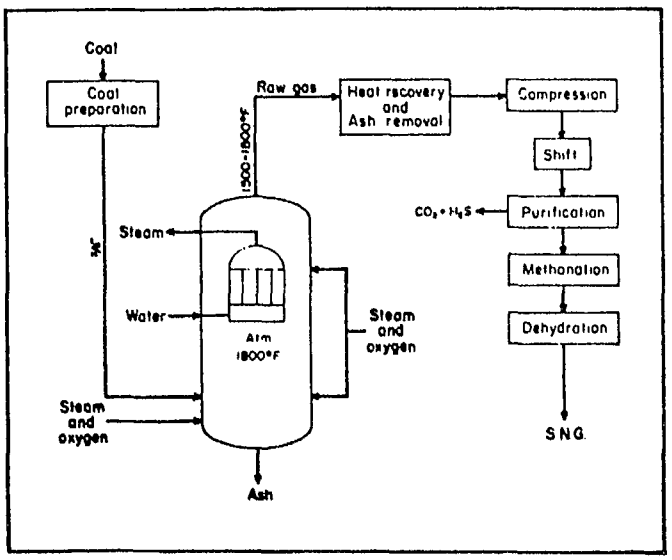

This process is commercial in 16 plants. The plants have a maximum output of 1·1 million S.C.F. per day of synthesis gas suitable for the production of ammonia, methanol and oil by Fischer-Tropsch synthesis. The last installation was in 1960 but the process is once again under consideration for current installation.

FIGURE 4

KOPPERS-TOTZEK ENTRAINED-BED GASIFIER

REACTOR	TEMP. (°F)	PRESSURE	REACTANTS	PRODUCT GAS (RAW)
ENTRAINED FUEL	3300	ATMOSPHERIC	COAL-STEAM-O_2	300 BTU/S.C.F.

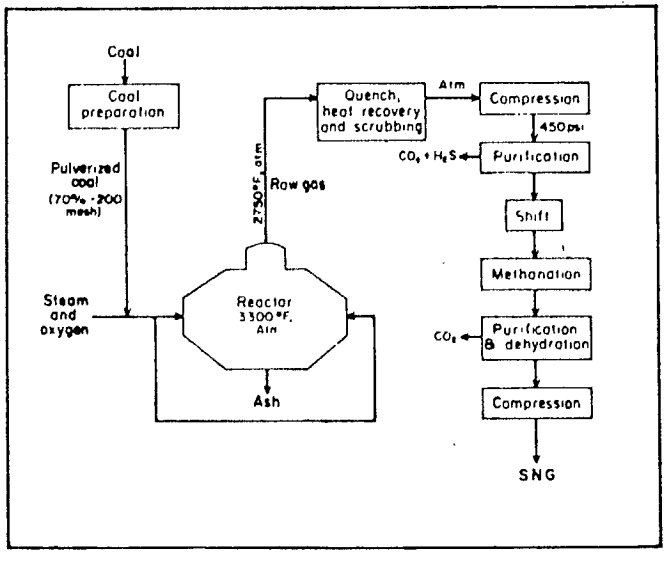

There are 16 commercial plants operating to produce a synthesis gas for ammonia production. The process is under consideration for current installation.

FIGURE 5

SCHEMATIC OF LABORATORY GASIFICATION UNIT

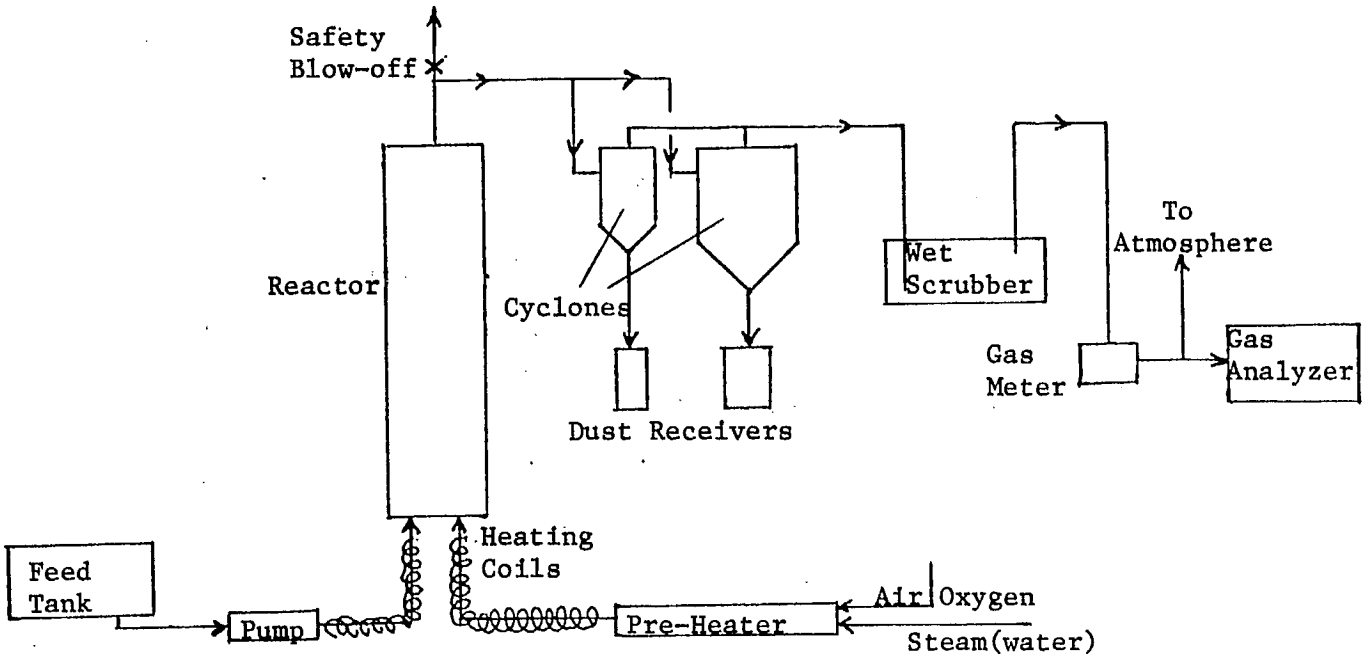

FIGURE 6

THE CANMET-ERL ATMOSPHERIC PRESSURE GASIFIER UNIT.