Livingstone Coring

A. Grenier

- Developed in the mid 1950's
- Used mainly for sampling in shallow water basins such as lakes and ponds
- Light weight sampler
- Allows recovery of a long stratigraphic sequence

This is the Livingston Corer…

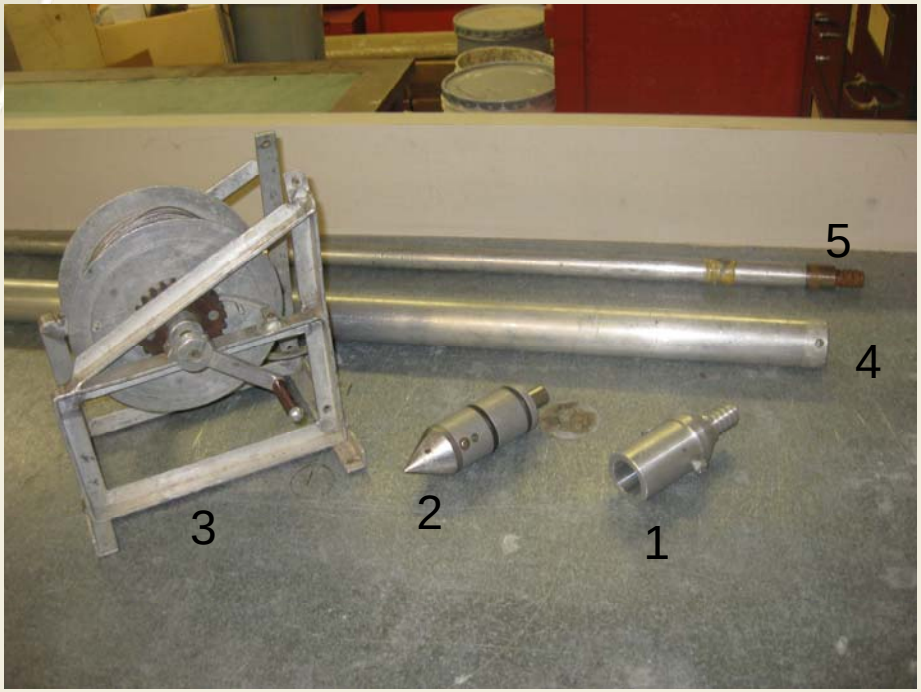

1. Sample tube adapter
2. Piston
3. Piston wire
4. Sample tube
5. Rod

How does it work?

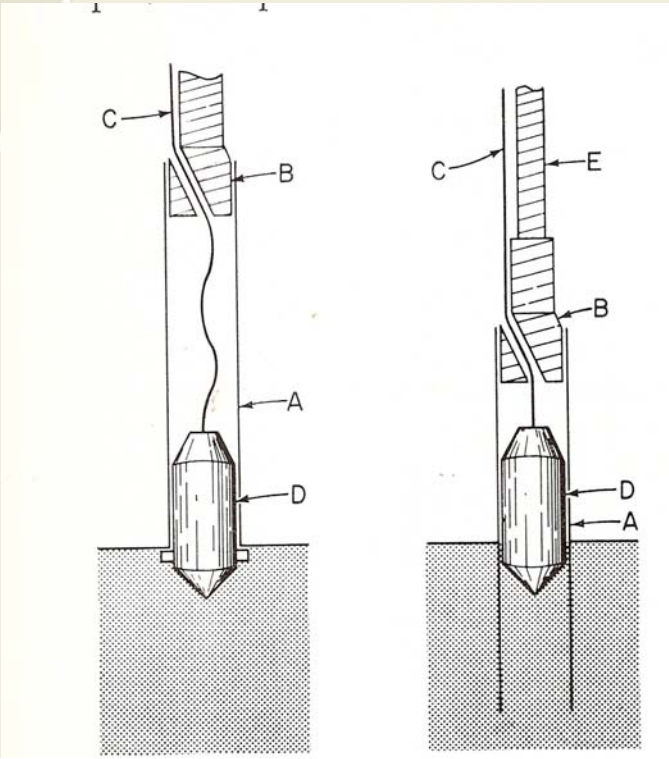

Extract from Deevey, E. S. Jr., 1965.

- Piston is locked at bottom of core barrel.
- Sampler is pushed to the desired start depth.
- Piston cable is held firmly.
- Sampler is pushed down while the piston remains at the start depth.

Advantages

- Locked piston prevents any contaminants from entering the tube.
- No airlock is created when penetrating sediments
- Piston creates suction that helps retain sediment when extracting the core
- Can recover long sediment sequences
- Portability and easy to use
- Two operators are sufficient.

Disadvantages

- Can be limited by water depth.
- Non-continuous core.
- Potential for contamination between two drives.
- Cannot penetrate sand, other coarse sediments, and large organic matter.

Sampling in the winter

Advantages

- Very stable platform
- Lots of space for the equipment
- Ease of access with a snowmobile
- Possibility for larger crew

Sampling in the winter

Disadvantages

- Equipment and sample prone to freezing
- Lake bottom profile needs to be done ahead of time
- Possibility of cold / wet conditions for the operators

Sampling in the summer

Advantages

- Can use a depth finder for site selection.
- Easy to wash out the mud from the equipment.
- Warm conditions.

Sampling in the summer

Disadvantages

- Limited workspace
- Stable anchoring may be a problem
- Winds can cause platform to shift
- Can lose equipment overboard

Photograph by R.J. Mott

Core handling

- Cap the bottom of the core barrel before pulling it out of water.
- Excess water from the top must be drained
- Spacers are added to the top and the caps sealed.
- Cores should be stored upright if possible.

Coring strategy

- Parallel coring in two holes with overlapping of core intervals.
- Record start coring depth and the end point of coring depth.

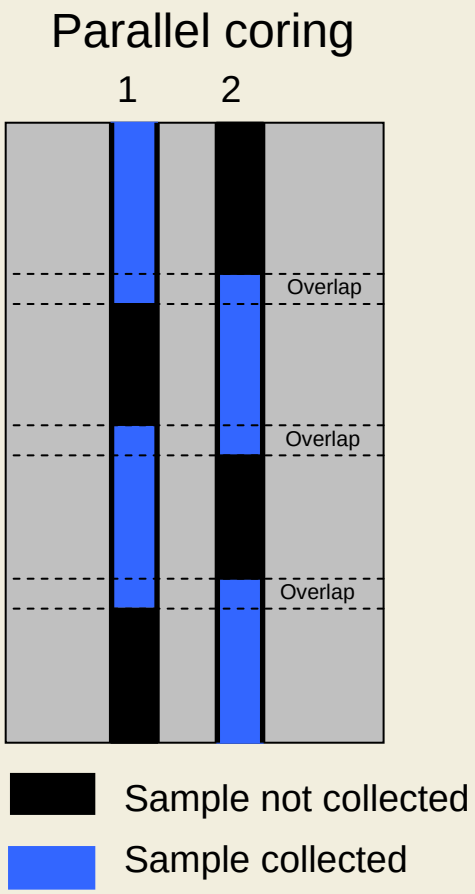

Core extraction

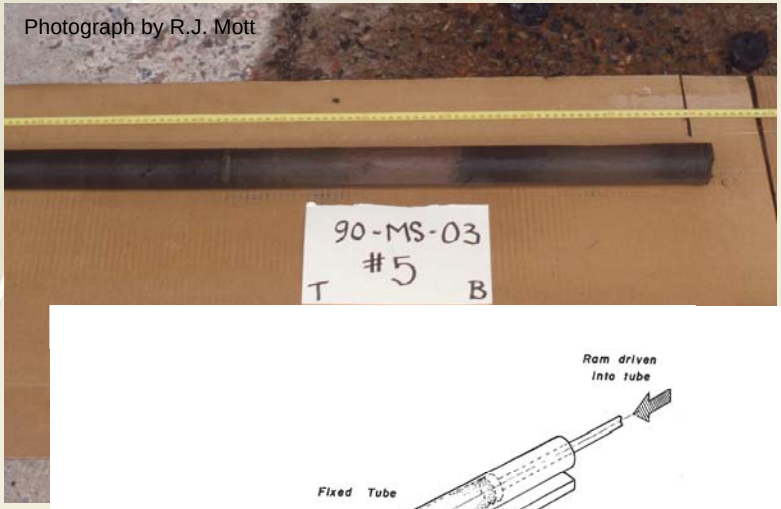

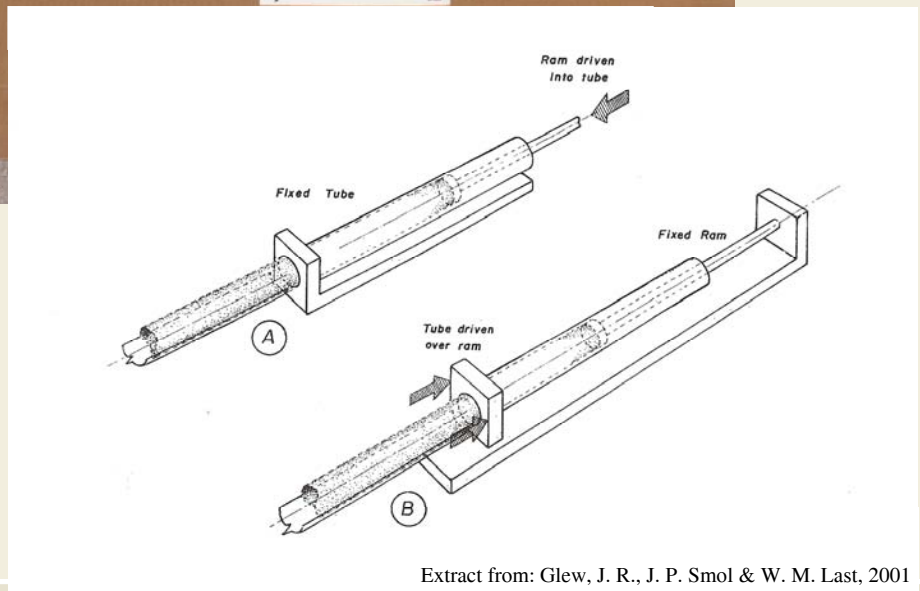

Extract from: Glew, J. R., J. P. Smol & W. M. Last, 2001

A. Sample tube is fixed and a rod pushes the sample out.

B. The rod is fixed and the sample tube slides towards the rod.

Specifics to GSC Livingstone Corer

- 2 sizes of core barrel (2 and 3 inch).
- Sediment core recovery of 3 ft to 6.5 ft long.
- Can be adapted to a clear plastic core barrel.

Summary

- Light weight piston corer used in shallow water
- Portable and easy to use.
- Allows recovery of long sediment sequence.
- Can be used all year round.
- Cores are easily extracted and the core barrel can be re-used.

Acknowledgements

- Martin McCurdy
- Greg Brooks

Additional information

- Deevey, E. S. Jr., 1965. Sampling Lake Sediments by Use of Livingstone Sampler. In Kummel, B. & D. Raups (eds.) Handbook of Paleontological Techniques. W.H Freeman and Company, San Francisco: 521-529.

- Glew, J. R., J. P. Smol & W. M. Last, 2001. Sediment Core Collection and Extrusion. In W. M. Last & J. P. Smol (eds) Tracking Environmental Changes Using Lake Sediments. Volume 1: Bassin Analysis, Coring, and Chronological Techniques. Kluwer Academic Publishers, Dordrecht, The Netherlands: 73-105.

- Livingstone, D.A., 1955. A Lightweight Piston Sampler for Lake Deposits. Ecology 36: 137-139.

- Wright, H. E., E. J. Cushing & D.A. Livingstone, 1965. Coring devices for lake sediments. In Kummel, B. & D. Raups (eds.) Handbook of Paleontological Techniques. W.H Freeman and Company, San Francisco: 494-520.

Questions?