Geological Survey of Canada
Commission géologique du Canada

GEOLOGICAL INFORMATION DIVISION
MAR 28 1984
DIVISION DE L'INFORMATION GÉOLOGIQUE

PAPER 83-23

ENVIRONMENTAL AND ENGINEERING APPLICATIONS OF THE SURFICIAL GEOLOGY OF THE FRASER LOWLAND, BRITISH COLUMBIA

JOHN E. ARMSTRONG

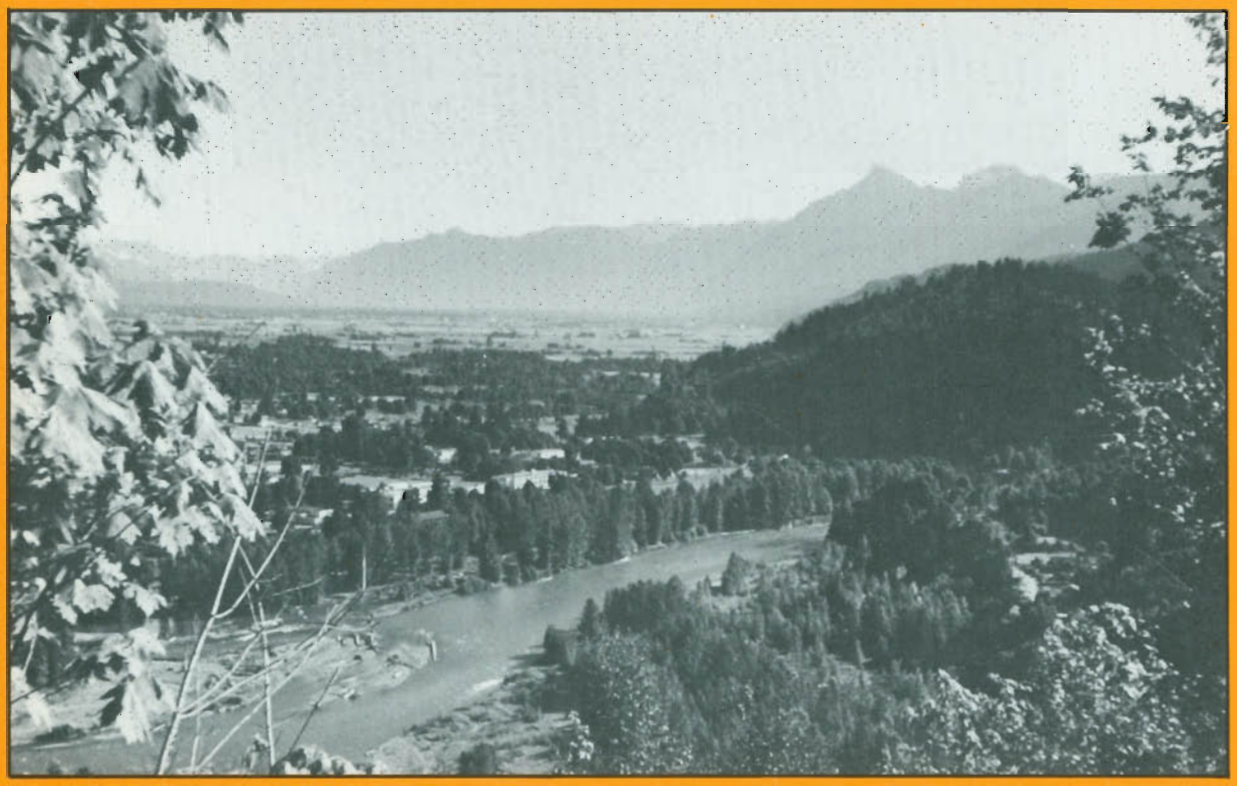

Canada

1984

PAPER 83-23

ENVIRONMENTAL AND ENGINEERING APPLICATIONS OF THE SURFICIAL GEOLOGY OF THE FRASER LOWLAND, BRITISH COLUMBIA

JOHN E. ARMSTRONG

1984

© Minister of Supply and Services Canada 1984

Available in Canada through

authorized bookstore agents
and other bookstores

or by mail from

Canadian Government Publishing Centre
Supply and Services Canada
Hull, Québec, Canada K1A 0S9

and from

Geological Survey of Canada
601 Booth Street
Ottawa, Canada K1A 0E8

A deposit copy of this publication is also available
for reference in public libraries across Canada

Cat. No. M44-83/23E Canada: $5.00
ISBN 0-660-11561-1 Other countries: $6.00

Price subject to change without notice

Cover

The eastern part of the Fraser Lowland with Vedder River in the foreground and Coast Mountains in the distance. The thick accumulations of sediments of diversified origins which underlie the Fraser Lowland reveal a complex Quaternary history.

Critical Readers

J.J. Clague
W.W. Shilts

Authors Address

206-2298 McBain Ave.,
Vancouver, B.C.
V6L 3B1

Original manuscript submitted: 1978 - 04 - 28
Approved for publication: 1983 - 08 - 16

CONTENTS

v Abstract/Résumé
1 Introduction
1 Geological mapping
1 Scope and purpose
1 Acknowledgments
2 Regional setting
2 Physiography
2 Climate
3 Drainage
5 Fraser River
5 Mountain rivers and creeks
5 Fraser Lowland rivers and creeks
5 Bedrock geology
7 Quaternary (surficial) geology
7 Introduction
7 Classification and composition of Quaternary deposits
7 Waterlain sediments
11 Glacier ice sediments
11 Glaciomarine and glaciolacustrine sediments
12 Other sediments
12 Mapping of surficial deposits
13 Subsurface geology
13 Uplands
13 Vashon Drift at or within 10 m of surface
13 Capilano Sediments more than 10 m thick at surface
15 Fort Langley glaciomarine sediments at or within 10 m of surface
15 Fort Langley ice-contact sediments at the surface
15 Sumas Drift more than 10 m thick at the surface
21 Lowlands
21 Fraser River delta
21 Fraser River valley
22 Areas of marine sediments
22 Mountain slope areas in which the surficial deposits are more than 10 m thick
24 Bedrock within 10 m of surface
24 Quaternary History
26 Applications of Quaternary geology
27 Engineering applications
27 Foundation materials
29 Foundation problems
30 Tunnels
31 Construction materials
31 Sand and gravel
32 Clay
33 Till
33 Crushed rock and rock
33 Geological hazards
33 Floods
33 Fraser River
33 Nicomekl and Serpentine rivers
34 Chilliwack River in Sumas valley
34 Mountain streams
34 Landslides
35 Landslides in bedrock
35 Landslides in unconsolidated sediments
38 Erosion
38 Volcanism
39 Faults and earthquakes
39 Hydrogeology
39 Surface water
40 Groundwater
40 Sewage disposal
41 Agricultural applications
41 Agricultural soils
42 Agricultural drainage
42 Land levelling and landscape architecture
43 Agricultural peat
43 Summary
44 Selected bibliography
49 Glossary
54 Metric conversions

Tables

3	1. Climatic data, Fraser Lowland
8	2. Quaternary formations
9	3. Quaternary stratigraphy
in pocket	4. Lithologic units and environments of deposition
10	5. Classification of sediments
28	6. Foundation properties and drainage

Figures

2	1. Index map showing location of Fraser Lowland
4	2. Locations of weather stations and stratigraphic sections
6	3. Distribution pattern of Quaternary deposits in the Fraser Lowland
10	4. Percentages of clay, silt, and sand in basic pedological textural classes
14	5. Stratigraphic sections in which Vashon Drift is at or within 10 m of the surface, Burrard Peninsula
16	6. Stratigraphic sections in which Vashon Drift is at or within 10 m of the surface, Tsawwassen, White Rock, and Surrey
17	7. Stratigraphic sections in which Vashon Drift is at or within 10 m of the surface, Port Moody and Mary Hill
18	8. Stratigraphic sections in which Capilano Sediments more than 10 m thick occur at the surface.
19	9. Stratigraphic sections in which Fort Langley glaciomarine deposits occur at or within 10 m of surface
20	10. Schematic cross-section in an area where Fort Langley ice-contact deposits are at the surface
20	11. Stratigraphic sections in which Sumas Drift is more than 10 m thick at the surface
21	12. Stratigraphic cross-section of part of Fraser River Delta
22	13. Stratigraphic sections in Fraser River valley
23	14. Stratigraphic cross-sections and section in Fraser River valley
24	15. Stratigraphic sections in Fraser River Delta, Nicomekl and Sumas valleys
25	16. Stratigraphic cross-section and section in Coast Mountain valleys
49	17. Geological column (Referred to in Glossary)

ENVIRONMENTAL AND ENGINEERING APPLICATIONS OF THE SURFICIAL GEOLOGY OF THE FRASER LOWLAND, BRITISH COLUMBIA

Abstract

A knowledge of the natural environment of the Fraser Lowland, which is bounded by mountain ranges on two sides and the ocean on the third, is essential in land use planning. The geology of the area has evolved over millions of years in the case of the bedrock and hundreds of thousands of years in the case of the unconsolidated sediments. Bedrock is at or within 10 m of the surface in less than 5% of the Fraser Lowland, consequently the geology of most concern is that of the remaining area where unconsolidated (Quaternary) sediments between 10 and 300 m thick overlie bedrock.

During the Quaternary the lowland was subjected to repeated glaciations separated by nonglacial intervals. Each major glaciation in the lowland went through three main stages: 1) an advance stage, characterized by coalescing piedmont glaciers probably terminating in the sea; 2) a maximum stage when ice attained a thickness of 1800 m or more and overrode all the Fraser Lowland and much of the adjoining mountainous areas; 3) a retreat or deglaciation stage when ice mainly occupied the valleys and arms of the sea once again. As a result of this complex Quaternary history, deposits of widely diversified origin were laid down and moulded into a succession of landscapes that were eroded and or buried, ending in our present landscape.

The geological materials, climate, and physical features (including drainage) all have important roles in the engineering and agricultural development of the area. Some geological materials form very poor bases for foundations because of low bearing capacity and/or poor drainage; others are good because of their excellent bearing capacities and/or good drainage. The most troublesome materials in the Fraser Lowland on which to support foundations are 'sensitive' marine and glaciomarine silty clays, organic sediments, and loosely compacted sand and silt.

The two commonest natural hazards in the Lowland are floods and landslides. Marine erosion is a problem at Point Grey. The Fraser Lowland lies in an earthquake zone and the National Building Code has incorporated the earthquake hazard potential in the regulations.

Construction materials are plentiful but much of them may be lost as a result of rapid urban growth and zoning regulations.

In all agricultured soil mapping the geological materials from which the 'soil' develops is a major controlling factor as to the class of topsoil. Management of the soil, including drainage and levelling, may be unsuccessful if the subsurface geology is not taken into account.

Groundwater supplies, which are plentiful in much of the Fraser Lowland, vary according to the precipitation and the drainage of the geological materials. They may become polluted if proper disposal of sewage and wastes is not undertaken.

Résumé

Une connaissance du milieu naturel des basses-terres du Fraser, région limitée sur deux côtés par des chaînes de montagnes et sur le troisième côté par l'océan, est essentielle à la planification de l'utilisation des terres. La géologie de la région évolue depuis des millions d'années dans le cas du socle rocheux et des centaines de milliers d'années dans le cas des sédiments meubles. Le socle affleure en surface ou se trouve à moins de 10 m de profondeur dans moins de 5% des basses-terres du Fraser; la géologie la plus intéressante s'avère donc celle du reste de la région, où des sédiments meubles du Quaternaire, dont l'épaisseur varie de 10 à 300 m, recouvrent le socle.

Au cours du Quaternaire, les basses-terres ont subi de nombreuses glaciations séparées par des intervalles non glaciaires. Chaque glaciation majeure a connu trois étapes principales: 1) une étape d'avancée, caractérisée par la coalescence des glaciers de piedmont qui ont probablement abouti dans la mer; 2) une étape d'avancée maximale, durant laquelle la glace a atteint une épaisseur de 1 800 m ou plus et a chevauché toutes les basses-terres du Fraser et une grande partie des régions montagneuses voisines; 3) une étape de recul ou de déglaciation, pendant laquelle la glace a encore occupé les vallées et les bras de mer. Par suite de ces événements complexes, des sédiments d'origines diversifiées ont été déposés et moulés en une succession de paysages dont l'érosion et l'enfouissement subséquents ont mené à la formation du paysage actuel.

Les matériaux géologiques, le climat et les éléments physiques (notamment le réseau hydrographique) ont tous des rôles importants à jouer dans la mise en valeur technique et agricole de la région. Certains matériaux géologiques forment de très mauvaises bases pour les fondations étant donné leur faible capacité portante, leur mauvaises conditions de drainage ou les deux; d'autres sont bons puisqu'ils disposent d'une excellente capacité portante et présentent de bonnes conditions de drainage ou les deux. Les argiles silteuses marines et glaciomarines de nature "sensible", les sédiments organiques et les sables et silts faiblement tassés présentent le plus grand nombre de difficultés pour la construction des fondations dans la région des basses-terres du Fraser.

Les inondations et les tremblements de terre sont les deux dangers naturels les plus communs de la région. L'érosion marine en particulier présente un problème à la pointe Grey. Les basses-terres du Fraser sont situées dans une zone sismique et, pour cette raison, les règlements du code national du bâtiment tiennent compte du risque sismique.

Les matériaux de construction sont abondants, mais une importante partie de ces matériaux pourrait être perdue en raison de la rapidité de la croissance urbaine et des règlements de zonage.

Pour tout travail de cartographie agricole, les matériaux géologiques à partir desquels le "sol" se forme s'avèrent un facteur déterminant pour le choix de la catégorie de la couche arable. La gestion du sol, y compris le drainage et le nivelage, pourrait ne pas réussir si l'on ne tient pas compte de la géologie de subsurface.

Les approvisionnements en eaux souterraines, abondants dans une grande partie des basses-terres du Fraser, varient en fonction de la précipitation et des conditions de drainage propres aux matériaux géologiques. Ces eaux risquent de devenir polluées si l'on ne procède pas convenablement à l'évacuation des eaux de vidange et des déchets.

INTRODUCTION

The Province of British Columbia has a population of approximately 2.6 million people (1980) of which more than 50% live in the Canadian part of the Fraser Lowland on about 0.3% of the province's land surface. At least 90% of these people live in the western third of the Lowland in the metropolitan area of Vancouver – Canada's third largest city and largest year round seaport. The population has more than doubled since the end of the Second World War and as a result expansion at times has been unplanned. The **geology** of the **unconsolidated sediments**[1] is complex and interesting; knowledge of this geology is essential for adequate planning of the land use.

Geological Mapping by Armstrong and Co-Workers in Fraser Lowland

Intermittently, during the past three decades the writer and co-workers have carried out basic geological studies and mapping in the Fraser Lowland (Fig. 1). Although the **bedrock** geology of the area was investigated (Armstrong, 1953; Armstrong and Roddick, 1965; Roddick, 1965; Roddick and Armstrong, 1965), the major thrust of the studies and mapping concentrated on the **unconsolidated (surficial) sediments** overlying bedrock. Preliminary maps of the surficial deposits of the Fraser Lowland (Armstrong, 1956, 1957, 1960a,b) resulted from what were basically data gathering efforts of a research nature, concerned primarily with the origin, **stratigraphy**, age, and history of the deposits, although a limited attempt was made to indicate the behaviour of some of the materials resulting from natural phenomena and a variety of land uses. The **stratigraphy** was subsequently updated and the maps revised (Armstrong, 1980a,b; Armstrong and Hicock, 1980a,b); these new maps are directed primarily to those with a basic understanding of geology and its terminology.

Armstrong and Brown (1953) investigated **groundwater** resources of the Fraser Lowland starting with Surrey Municipality. Halstead (1957, 1959, 1961) continued these investigations and has accumulated a wealth of information on the **subsurface geology**, the extent and nature of the **aquifers**, the quantity and quality of the groundwater, and areas of potential groundwater pollution. Leaming (1968) studied **sand** and **gravel** in the Strait of Georgia area, including the Fraser Lowland.

Scope and Purpose

This report is written to be used in conjunction with the most recent surficial geology maps of the Fraser Lowland – New Westminster (Map 1484A), Mission (Map 1485A), Vancouver (Map 1486A), and Chilliwack (Map 1487A) map areas – published by the Geological Survey of Canada (Armstrong, 1980a,b; Armstrong and Hicock, 1980a,b). An attempt is made to explain to all those concerned with land use the value of the geological information contained in the maps and reports referred to in the previous section. Thus this report illustrates that a knowledge of the geology, in particular the **Quaternary** geology, is essential to evaluating the use of the land and water in the Fraser Lowland. The information should be of value to the geotechnical consultant, civil engineer, architect, landscape architect, pedologist, regional planner, physical geographer, driller, contractor, and all others, including laymen, concerned with the proper uses and aesthetic values of the area.

In the past it has often been forgotten, ignored, or not understood that a knowledge of the geology of an area is absolutely essential before the most effective use of the land can be planned and designated. In this report some of the mistakes of the past will be pointed out. Although more and more people involved in the use of land and water now recognize the value of geological investigations, improper land use is still a common occurrence. Among the reasons that account for many of these errors are:

1) Numerous geologists who prepare and publish scientific maps and reports do not attempt to make the information understandable to nongeologists. 2) Although individuals trained in other professions (excluding the geotechnical and pedological disciplines) generally have had a limited contact with geology, they think that they know enough about it not to call in a specialist. 3) Some individuals consider geological investigations an unnecessary added expense. 4) Some individuals have no understanding or knowledge of geology and consequently do not seek geological advice.

As this report is aimed at a wide audience, geological terminology has been simplified; however a **Glossary** appears at the end of this report and defines many technical and scientific terms found in the text.

The use of this report and the surficial materials maps (Armstrong, 1980a,b; Armstrong and Hicock, 1980a,b) is limited by the scale of mapping – 1:50 000 – and the generalizations resulting therefrom. This report is an overall guide to geological conditions existing in the Fraser Lowland and should not be used as an engineering geology report for a given site. In all such site studies, a detailed geotechnical investigation report is recommended.

Acknowledgments

My thanks are extended to many geology students who helped me during the course of field work from 1948 to 1960 and 1973 to 1976. Those who undertook graduate theses under my supervision include J.A. Roddick, G.A. Wilson, W.L. Brown, F.J.E. Wagner, and S.R. Hicock. I also was aided in the field by a gifted amateur, W.M. Draycot, who deserves special attention.

Two individuals who deserve special thanks are E.C. Halstead, Groundwater Division, National Hydrology Research Institute, Environment Canada, and S.F. Leaming, Geological Survey of Canada (1960-81). Halstead, who has been conducting hydrogeology studies of the Fraser Lowland, has made thousands of water well drill records available to me and we have had innumerable discussions on the surficial geology of the area. Leaming carried out a study of the sand and gravel deposits.

In recent years (1974-83) J.J. Clague, Geological Survey of Canada, and S.R. Hicock, Department of Geology, University of Western Ontario, have been involved in many penetrating discussions with me concerning the surficial geology of the Fraser Lowland.

I also received close co-operation from the majority of the municipal engineering departments, from the Geotechnical and Materials Branch of the British Columbia Ministry of Transportation and Highways, and from the owners and operators of numerous gravel and sand quarries.

In addition, many engineering geologists and geotechnical engineers and their companies provided useful information, particularly Brian Fletcher of Golder Associates; W.L. Brown of Brown, Erdman and Associates Ltd.; H. Nasmith of Thurber Consultants Ltd.; R.A. Spence of R.A. Spence Engineering Ltd.; CBA Engineering; and R.H. Blunden, consultant.

Much valuable information was provided by the Soils Survey, British Columbia Department of Agriculture, and the Resources and Analysis Branch, British Columbia Ministry of Environment, during the late 1950s and early 1960s; I would particularly like to thank H.A. Luttmerding, C.C. Kelley, and P.N. Sprout.

[1] Terms in bold type are defined in the Glossary.

I am most grateful to Bruce Cameron of the Geological Survey of Canada, who identified foraminifera, and to L. Lavkulitch of the Soil Science Department, Faculty of Agriculture, University of British Columbia, who undertook clay mineralogy studies. Thanks are also extended to W. Blake, Jr., Geological Survey of Canada, and M. Stuiver, Quaternary Research Center, University of Washington, for providing radiocarbon dates.

And finally my thanks to W.W. Shilts and J.J. Clague of the Geological Survey of Canada for their critical reviews of this report. To Clague I am very grateful for his patience and innumerable useful suggestions that helped me to improve this report.

REGIONAL SETTING

Physiography

Fraser Lowland forms the southwest corner of the Pacific Coast mainland of Canada and the adjoining northwest corner of the continental United States (Fig. 1). It is a triangular area covered with **Quaternary** surficial deposits that have relatively low relief; its apex is 105 km east of the Strait of Georgia. The Lowland is bounded on the north by the Coast Mountains, on the southeast by the Cascade and Chuckanut mountains and on the west by the Strait of Georgia. The Fraser Lowland has an area of approximately 3500 km^2, of which approximately 2600 km^2 are north of the International Boundary. All further use of the term *Fraser Lowland* in this report will be in reference only to the Canadian part of the Lowland.

Both the Coast and Cascade Mountains are major mountain systems and have many summits in excess of 1800 m elevation. A number of these occur within 25 km of the Fraser Lowland. The Coast Mountains are dissected by deep, U-shaped glacial valleys, many of which terminate in **fiords.** Examples of fiords are Howe Sound, Indian Arm and of **fiord lakes** are Pitt and Harrison lakes. Examples of deep, U-shaped glacial valleys that terminate in the Fraser Lowland are Fraser River valley between Rosedale and Hope (25 km east of the study area), which separates the Coast and Cascade Mountains, and the western part of Chilliwack River valley in the Cascade Mountains.

The dominant **geomorphological** (see **geomorphology**) feature of the Fraser Lowland is Fraser River which occupies a late glacial and postglacial valley up to 5 km wide and 225 m deep. This river empties into the Strait of Georgia after crossing the **subaerial** delta of the Fraser; the delta is 31 km long and 20 km wide. North and south of Fraser River valley the Fraser Lowland consists mainly of gently rolling and flat-topped uplands, separated by wide, flat-bottomed valleys. Most of the upland areas consist of unconsolidated deposits, do not exceed 175 m in elevation, and range in area from 3 to 400 km^2. Their geological nature varies greatly and is discussed elsewhere in this report. All owe their origin and form to glacial and/or marine processes. In addition to these uplands a number of bedrock hills or mountains rise above the main lowland area, for example Mount Burnaby, Grant Hill, and Sumas Mountain, all above 300 m elevation.

In addition to the valley of Fraser River two other major flat-bottomed valleys transect the Fraser Lowland: Nicomekl and Sumas valleys (Fig. 2, 3), both of which were arms of the sea during the period from 13 000 to 11 000 years ago. Nicomekl valley is more than 30 km long and 5 km wide and stretches from Boundary Bay northeast to Fraser River. Sumas valley also averages 5 km in width and in Canada extends from the International Boundary northeast 25 km to Fraser River.

Climate

The climate of the Fraser Lowland, which is classed as inshore maritime, is strongly influenced by the Coast Mountains to the north and Cascade Mountains to the east. Although the Fraser Lowland is relatively flat, because of these adjoining mountains a strong increase in precipitation occurs from south to north and west to east (Table 1), as is illustrated by the following data (British Columbia Department of Agriculture, 1916-1976). The total precipitation varies greatly from year to year, for example for the period 1929-1959, annual values range from 900 to 1900 m at New Westminster and 700 to 1500 mm at White Rock. The range of monthly values is even greater: 35 and 530 mm for January 1949 and 1935, respectively, and 0 and 125 mm for July 1958 and 1932, respectively, at New Westminster.

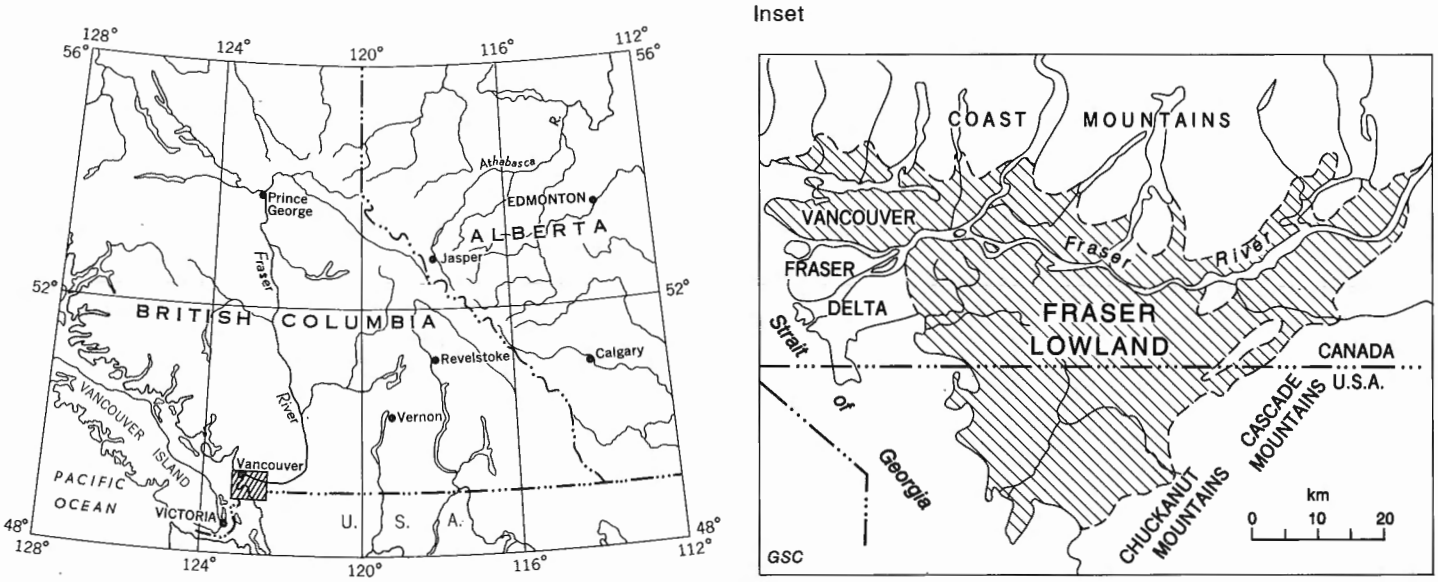

Figure 1. *Index map showing location of Fraser lowland.*

Table 1. Climatic data, Fraser Lowland

Station (elev.) (cf. Fig. 2)	Mean Monthly Temperature (°C) Jan.	Feb.	Mar.	Apr.	May	June	July	Aug.	Sept.	Oct.	Nov.	Dec.	Annual[1]	Record High	Record Low	Mean Annual Precipitation[2] (mm)
Abbotsford Airport (60 m)	1.5	4.0	6.5	10.0	14.0	16.5	19.0	19.0	16.5	12.0	6.5	3.5	10.5(21)	42.5	-24.0	1500(21)
Agassiz (15 m)	2.0	4.0	7.0	11.0	15.0	17.5	20.0	20.0	17.5	12.5	7.0	3.5	11.0(74)	44.0	-28.0	1650
Chilliwack (6 m)	2.0	4.5	6.5	10.5	14.5	17.5	20.0	19.5	17.5	13.0	7.0	3.5	11.0(16)	42.5	-22.0	1700
Mission (55 m)	2.5	4.5	7.0	10.5	14.5	17.0	20.0	19.5	17.0	13.0	7.0	4.0	11.0(13)	42.5	-21.5	1600(13)
New Westminster (114 m)	2.5	4.0	7.0	11.0	14.0	17.5	20.0	20.0	17.0	13.0	7.0	4.0	11.5(78)	42.0	-21.5	1500
Vancouver Airport (4 m)	2.5	4.5	7.0	10.5	14.0	17.0	20.0	19.5	16.5	13.0	7.0	3.5	11.0(28)	37.5	-20.0	1050(28)
Hatzic Prairie (15 m)																2100(7)
Hollyburn Ridge (950 m)																2900(12)
Ladner (1 m)																950
Pitt Polder (2 m)																2300(14)
White Rock (60 m)																1050
Vancouver City Hall (85 m)																1050

[1] Years of record given in parenthesis.
[2] Records are for at least 30 years, unless otherwise noted in parenthesis. Figures have been rounded to nearest 50 mm.

Source: British Columbia Department of Agriculture, 1916-1976.

The Vancouver airport weather station recorded 311 mm of rainfall in November 1980 making it the wettest month on record (Vancouver Sun, December 1, 1980); it also recorded a new high of 1419 mm precipitation in 1980 (Vancouver Sun, January 2, 1981).

In the winter a fairly steady succession of low pressure systems moves in from the Pacific Ocean, and the relatively warm, very humid air produces some of the most cloudy and rainy weather in Canada. About 75% of the annual total precipitation occurs from October to March inclusive; for example, at Vancouver City Hall 75% occurs during these six months and at Abbotsford Airport, 72%. Occasionally polar air masses move into the Fraser Lowland and produce heavy snowfall or freezing rain where the cold interior and damp maritime air meet. The average annual snowfall at Vancouver airport is about 45 cm, at Abbotsford 75 cm, and at Hollyburn Ridge 750 cm which is about 9 km northwest of Vancouver and 935 m higher.

In contrast to the rainy six months, the six month period from April to September has frequent long spells of sunny weather as large Pacific high pressure cells extend over the area. The air is warm but sea-breezes usually forestall very high temperature (above 30°C); the overnight temperatures seldom drop below 10°C. Rainfall is relatively low for this six months and **agricultural soil** moisture deficiencies frequently develop in July and August – the two most important crop growing months – when rainfall averages about 6% of the total precipitation.

Temperature and precipitation data for some stations in the Fraser Lowland are given in Table 1.

The longest frost-free periods in Canada exist in the Pacific Coast area of which the Fraser Lowland is part. In various parts of the Lowland this period varies from 178 days (Matsqui) to 219 days (Vancouver City Hall). The variation in this period at Vancouver City Hall from year to year may be from 150 to 300 days (Luttmerding and Sprout, 1969).

Drainage[1]

The natural surface drainage system of the Fraser Lowland includes the following: 1) Fraser River which flows across the entire length of the Fraser Lowland from east to west; 2) rivers and creeks that flow out of the adjoining Coast and Cascade mountains, onto the Fraser Lowland, and into Burrard Inlet or Fraser River; and 3) rivers and creeks that flow entirely within the Fraser Lowland and terminate either in Fraser River or Strait of Georgia. Locations of all rivers and creeks referred to here are shown in Figure 2.

[1] The general term drainage is used in this bulletin to describe the natural and artificial processes by which water that accumulates on the land surface is removed. Some of this water will flow along the surface, down any slope that leads to the nearest stream or river and thence into the ocean. This is referred to as surface drainage. The remainder of the water percolates downward into the underlying materials and is called subsurface or groundwater drainage and is discussed in the section on *Hydrogeology*.

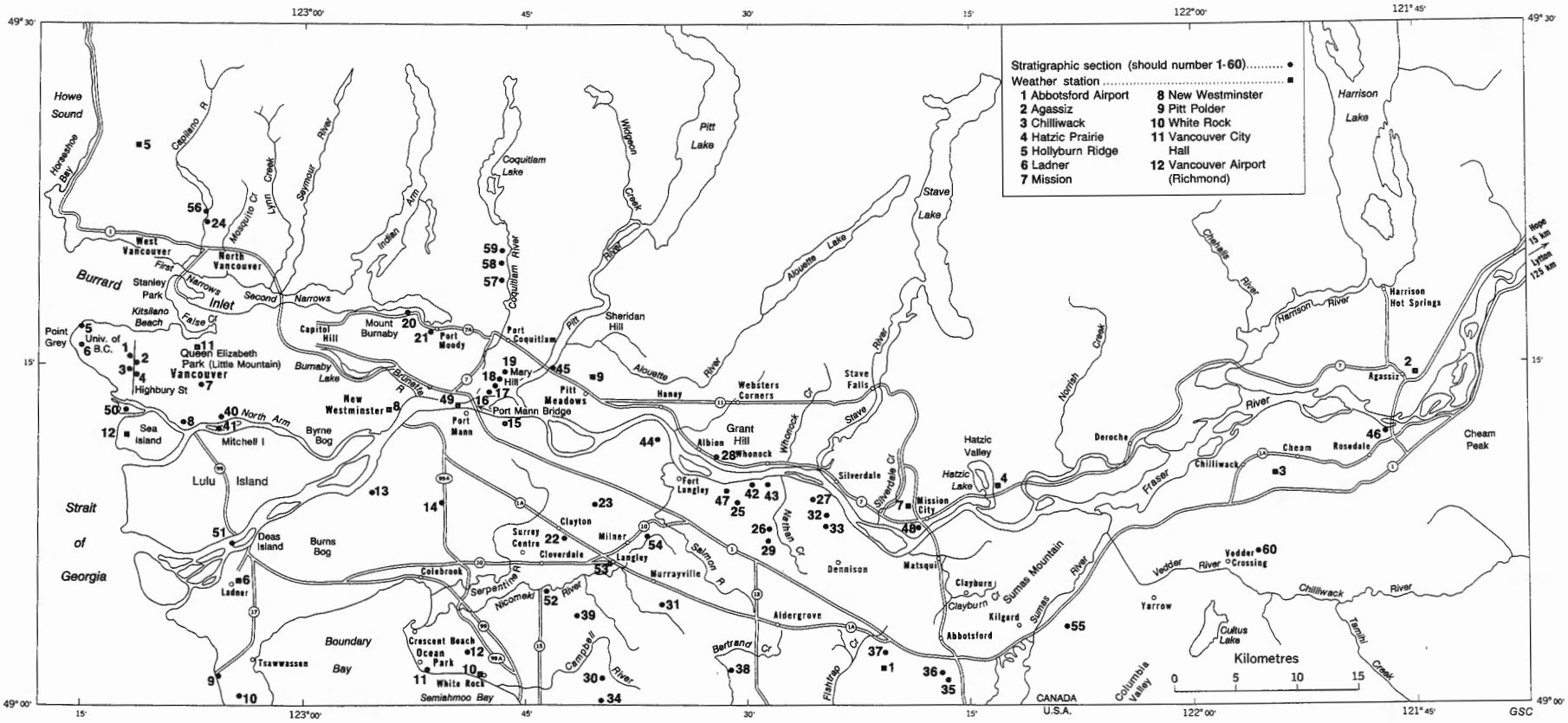

Figure 2. Location of weather stations (cf. Table 1) and stratigraphic sections (cf. Fig. 5-16) in the Fraser lowland.

Fraser River

The Fraser River system is one of the great systems of North America. It has the third largest average mean flow and the sixth largest drainage basin in Canada – 234 000 km^2 and river length of 2800 km. That part of the Fraser Lowland within Canada drained by Fraser River and tributaries constitutes less than 1% of the drainage basin. This part of the Fraser Lowland plus the basins of Fraser River tributaries west of Hope make up less than 8% of the Fraser basin.

The average annual mean flow of Fraser River at Hope (at the eastern extremity of the Fraser Lowland) is 2700 m^3/s; this annual mean flow varies from year to year from 1900 to 3250 m^3/s. The lowest daily mean flows – in midwinter – may be as low as 550 m^3/s. The highest mean daily flows – during the spring runoff (May and June) – have peaked at 15 300 m^3/s in 1948 and probably more than 16 500 m^3/s in 1894. Most years during the spring runoff, the daily mean flows range between 7000 and 12 000 m^3/s. (All data from Hoos and Packman, 1974; Barker, 1974).

Fraser River transports a heavy load of **sand, silt,** and **clay,** most of which is deposited in the Strait of Georgia to add to the growing **delta.** The sediment is derived in a large part from its basin north of Lytton, 105 km north of Hope. Sediment survey shows that approximately 18 million tonnes[1] are discharged annually past Port Mann (about 4 km upstream from New Westminster). This sediment load may vary greatly, for example from about 11 million tonnes in 1970 to more than 26 million tonnes in 1972 (Hoos and Packman, 1974); 80% of the sediment load is transported during the freshet months of May, June, and July (Milliman, 1980). During this period the bed of the river channel is markedly altered by rapid deposition and scour. About 2.4 million tonnes of sediment, mostly sand, is dredged from the river channels annually (Milliman, 1980).

Mountain Rivers and Creeks

The tributary rivers and creeks that join Fraser River west of Hope add between 20 and 25% to its annual mean flow, that is about 650 m^3/s (Hoos and Packman, 1974; Hall and Wiens, 1976; Milliman, 1980). The major tributaries are the Pitt (including the Alouette), Stave, Harrison (including the Chehalis) and Chilliwack rivers. Several prominent creeks, such as Dewdney and Norrish, and many smaller ones also drain from the mountains into Fraser River. Also flowing from the mountains into the Fraser Lowland are Capilano River, Lynn Creek, and Seymour River plus several small creeks, all of which terminate in Burrard Inlet.

All these streams flow from forested watersheds that have extensive drainage in the Coast and Cascade mountains. Their flow regime is controlled in large part by snowmelt at higher elevations. Nevertheless, high flows may occur during the wet autumn and winter months as well as during spring snowmelt. This happens if the winter weather has been mild on the coastal slopes of the mountains, for example during January and February 1977, the freezing level was consistently above 2000 m elevation. To illustrate this variation in the season when the maximum daily mean flow occurs, a study was made of the records on Chilliwack River at Vedder Crossing (Munshaw, 1976). During a 41 year period, the maximum flows were distributed as follows: January – 6 flows, February – 2, March – 0, April – 1, May – 6, June – 12, July – 0, August – 0, September – 0, October – 6, November – 3, and December – 5. The five highest maximum daily mean flows, averaging about 570 m^3/s, were from November to February; the five lowest, averaging about 170 m^3/s except for one in December, all occurred in May and June. Nine winter flows, ranging from 365 to 708 m^3/s, exceed the largest spring flow of 360 m^3/s.

The daily and the annual flows in all these rivers and creeks may vary greatly. For example, Capilano River, which has a drainage basin of only 200 km^2 has an annual mean flow of about 20 m^3/s; however, this flow ranges between daily extremes of 0.2 m^3/s to about 790 m^3/s.

Except for Pitt River, these waterways usually appear clean compared to the muddy Fraser River and the Fraser Lowland streams that carry a heavy load of fine sediment. Pitt River is tidal and during high tides Fraser River sediments are deposited at the south end of Pitt Lake (Ashley, 1977, 1979).

Fraser Lowland Rivers and Creeks

Several rivers and creeks are located entirely within the Fraser Lowland and are either tributaries of the Fraser or flow directly into Strait of Georgia. The main lowland rivers and creeks that flow into Fraser River are: on the north side, Silverdale, Whonock, Kanaka creeks, and Brunette River; and on the south side, Sumas and Salmon rivers, and Chilliwack-Atchelitz, and Nathan creeks. These streams probably contribute less than 1% of the flow added to the Fraser west of Hope (no accurate flow records are available). Nicomekl, Serpentine, and Campbell rivers flow directly into Semiahmoo Bay, Strait of Georgia. Bertrand and Fishtrap creeks flow south into Nooksack River in Washington State and thence into Strait of Georgia.

The flow of all the streams discussed above is controlled more by seasonal variations in precipitation than that of Fraser River or the mountain streams because they do not drain areas in which a winter snowpack is formed. The flow of some of the streams is largely maintained during the drier periods by groundwater either obtained directly from aquifers or from free-flowing artesian wells. This is especially true of Campbell River, and Bertrand and Fishtrap creeks. The water in the Lowland streams in the majority of cases is muddy, resulting from the fact their courses are mainly cut through unconsolidated sediments which are actively eroded.

Wiens and Beale (Hall and Wiens, 1976) measured the variation over a one-year period in the flow of Salmon River, a typical Lowland river; the daily range was from 0.5 to 10.5 m^3/s from November to May and 0.5 m^3/s or less from June to October.

Bedrock Geology

Bedrock outcrops on the southern slopes of the Coast Mountains and western slopes of the Cascade Mountains. Outcrops are also found on isolated hills in the Fraser Lowland and along several Lowland creeks and the south shore of Burrard Inlet.

The Quaternary deposits (discussed in the following section) of the Fraser Lowland are underlain by plant-bearing, freshwater, **sedimentary rocks** of Upper **Cretaceous** (10% or less) and **Tertiary** (90% or more) ages: interbedded **sandstones, siltstones, mudstones, shales,** and **conglomerates.** The Tertiary **strata,** originally horizontal, now dip about 12° south, away from the Coast Mountains; they reach a maximum thickness of about 4000 m at the International Boundary due south of Vancouver. In downtown Vancouver the Tertiary sedimentary rocks are at or within a few metres of the surface. In places the sedimentary rocks are interlayered with, intersected by, or overlain by Tertiary **basaltic volcanic rocks;** for example, Queen Elizabeth Park in Vancouver has in part been developed in two old quarries in a **basaltic sill** or **flow.**

In the New Westminster, Vancouver (Armstrong and Hicock, 1980a,b), and most of the Mission (Armstrong, 1980a)

[1] 1 tonne = 1000 kg.

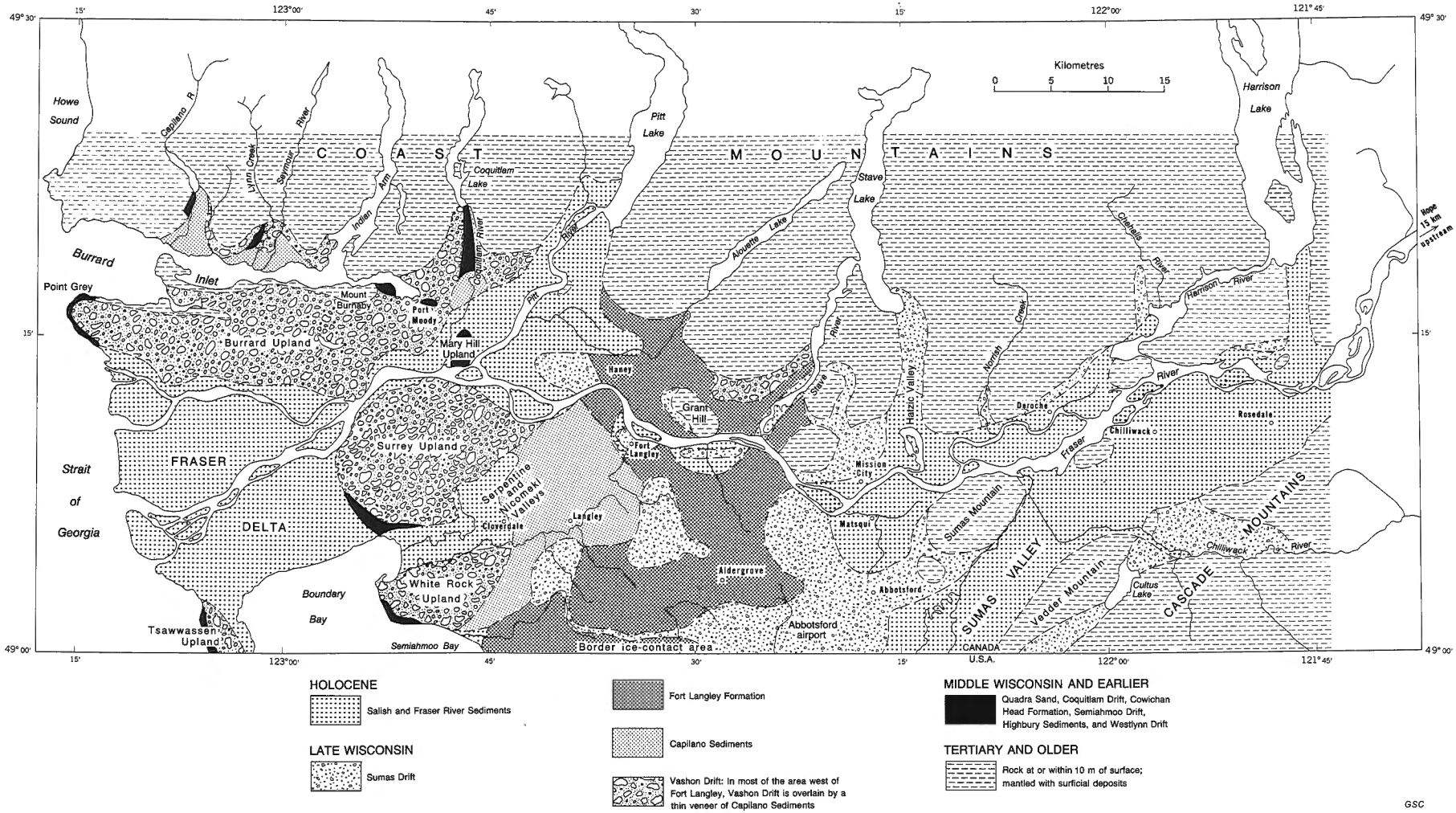

Figure 3. *Distribution pattern of Quaternary deposits in the Fraser lowland (for detailed surficial geology see Armstrong, 1980a,b; Armstrong and Hicock, 1980a,b).*

map areas, the Tertiary strata rest unconformably on **Mesozoic granitic plutonic** rocks and associated **metamorphic rocks.** These rocks are well exposed on the slopes of the Coast Mountains. South of Fraser River in the eastern part of the Mission and in the Chilliwack (Armstrong, 1980a,b) map areas Tertiary rocks rest unconformably on Upper **Paleozoic** and Mesozoic sedimentary and volcanic rocks which are extensively interspersed with granitic plutonic and associated metamorphic rocks. All these rocks are well exposed in the Cascade Mountains and on Sumas Mountain.

All the pre-Tertiary rocks have undergone many complex geological changes involved in mountain building, **plutonism,** and **plate tectonics** (e.g., Roddick, 1965; Monger, 1970; Monger and Price, 1979) and their complex history still poses many unanswered questions.

QUATERNARY (SURFICIAL) GEOLOGY

Introduction

The Fraser Lowland, like most of Canada, has been subjected to at least three major glaciations separated by nonglacial intervals. The present landscape and deposits are primarily the result of the last glaciation (Late **Wisconsin**) and postglacial (**Holocene**) processes.

The Quaternary units at the surface in the Fraser Lowland are shown on surficial geology maps of Chilliwack, Mission, New Westminster, and Vancouver areas (Armstrong, 1980a,b; Armstrong and Hicock, 1980a,b)[1]. Figure 3 shows a generalized distribution of surface materials. Almost all the surface deposits are Vashon and younger; except in a few seacliffs, river, and creek valleys, and in man-made exposures (in total less than 1% of the area), pre-Vashon units are encountered only in drillholes. Tables 2, 3, and 4 summarize the stratigraphy of these deposits from different points of view.

Table 2 shows the Quaternary **lithostratigraphic** units of the Fraser Lowland according to age with the oldest at the bottom and youngest at the top. The names listed in italics are from Armstrong (1956, 1957, 1960a,b) and are included (1) to show revision in the terminology and (2) to aid those familiar with the older unit names to equate with the new unit names.

In Table 3 the lithostratigraphic units are shown in relation to one another, to the time-stratigraphic and **geologic-climate units,** and to absolute time expressed in radiocarbon years before present (BP), where "present" is taken to be 1950 (see **radiocarbon dating**). For example, Vashon Drift of Late Wisconsin age is part of the Fraser Glaciation, and it was deposited between 13 000 and 18 000 years ago. The **time-transgressive** nature of some of the units is also shown. For example, the deposition of Salish Sediments commenced at different times in different areas: 12 000 years ago in areas above 275 m elevation and 10 000 years ago in areas below 200 m. Another good example is Quadra Sand which was deposited 29 000 or more years ago at the north end of Strait of Georgia and 15 000 years ago at the south end of Puget Lowland (Clague, 1976). Note the overlapping age of some sediments; for example, Capilano Sediments (10 000-13 000 BP) occur in the western third of the Lowland and Fort Langley Formation and Sumas Drift (11 000 to 13 000 BP) occur in the eastern two-thirds of the Lowland. Semiahmoo Drift and older lithostratigraphic units may be as complex as the younger units (see Table 4 and the section on *Subsurface Geology*).

The surface and subsurface Quaternary geology is discussed in much more detail in Armstrong (1981), Hicock and Armstrong (1981), Clague and Luternauer (1982, 1983), and Hicock et al. (1982).

The Quaternary history of the Fraser Lowland includes a discussion of many of the components that must be taken into account in order to unravel and fully understand it.

Classification and Composition of Quaternary Deposits

Table 4 shows the variety of Quaternary deposits found in the Fraser Lowland. All the deposits, except the landfill and some of the organic deposits, are sediments.[2] Some of the organic deposits are peat bogs that have grown in situ. The methods of transportation and the environments of deposition are the major factors that determine the physical makeup of the sediments. Three major groups of sediments comprise the bulk of the Fraser Lowland deposits. These are waterlain sediments transported by rivers and streams and deposited in either salt (marine) or fresh water; (2) glacier ice sediments deposited directly on land as a result of **glaciation,** and (3) **glaciomarine** and **glaciolacustrine** sediments which are waterlain deposits in which glacier-ice transported material has been dropped. In addition to these three major groups of sediments, windblown (eolian) and **colluvial** sediments are found in limited areas. **Peat** bogs and organic sediments are widespread in flat lying, lowland areas and are also found to a minor extent in upland areas.

Waterlain Sediments

The waterlain sediments which were formed in a variety of environments, include the following (Table 4): **fluvial,** marine, **lacustrine,** and **glaciofluvial** deposits. These sediments are classified according to the size of their constituent particles; Table 5 shows the common systems of classification in use in North America. The Wentworth system is normally used by geologists; however, in this report the United States Department of Agriculture terminology is used (Table 5, Fig. 4).

The fluvial deposits consist of stream **channel** and **floodplain** sediments and deltaic sediments normally deposited in the sea. The channel deposits along Fraser River are the most widespread. East of Mission they consist mainly of sandy gravel and west of Mission mainly of sand interbedded with minor quantities of sand and silty loam. Fraser River overbank deposits are mainly silty to silty clay loam. Fraser delta deposits consist, in addition to the above, of thick sections of fine sand to clayey silt. Fraser River sands have an average composition of 40% **quartz, quartzite,** and **chert;** 11% **feldspar;** 45% rock fragments; and 4% miscellaneous **detritus** (Garrison et al., 1969). In 1982 at my request, Dr. L. Lavkulitch of the Soils Department, Faculty of Agriculture, University of British Columbia, made soil analyses of six drillhole samples of Fraser Delta marine foreslope deposits, from 30 to 45 m below sea level, from near Annacis Island in the New Westminster city area. These samples were provided by Golder Associates of Vancouver. The sediments consisted of interbedded, soft to firm, grey, clayey silt, and loose to compact fine sand. The six samples consisted of 62 to 67% silt, 23 to 37% clay, and 1 to 12% fine sand. By means of X-ray diffraction, the minerals present in the clay fraction were determined: greater than 50% muscovite **mica;** 30 to 50% **kaolinite;** 10 to 30% **chlorite;** less than 10% quartz; and less than 5% **montmorillonite.** The silt and fine sand fractions consisted of muscovite mica,

---

[1] For detailed surficial geology, the reader is referred to Geological Survey of Canada Maps 1484A to 1487A, which can be purchased from the Publication Distribution offices of the Geological Survey in Vancouver, Calgary and Ottawa.

[2] A sediment is solid material, both mineral and organic, that has been moved from its site of origin by water, ice, or air, and has come to rest on the Earth's surface either above or below sea level.

Table 2. Quaternary Formations

Lithostratigraphic Units* (Mappable Units)	Probable Geologic-Climate Units and Radiocarbon Ages
FRASER RIVER SEDIMENTS Deltaic (*Richmond Delta Deposits*), distributary channel fill and overbank deposits (*Fraser Floodplain Deposits*). Overlies Postglacial estuarine and marine sediments in the Fraser River Delta.	POSTGLACIAL Present to 9000 BP
SALISH SEDIMENTS (*Salish Deposits*) Lowland and mountain stream sediments, lacustrine, eolian, colluvial, slide, beach, and bog deposits.	POSTGLACIAL Present to 12 500 BP
CAPILANO SEDIMENTS Raised deltas (*Capilano Gravel*), intertidal and beach deposits (*Sunnyside Sand and Bose Gravel*), glaciomarine (*Newton Stony Clay*), and marine (*Cloverdale Sediments*) deposits. Found to the west of Fort Langley beyond the area of Sumas Drift. Contains no recognized till diamicton.	FRASER GLACIATION (Late Wisconsin) Post-Vashon and pre-Postglacial 10 500? - 13 000 BP
SUMAS DRIFT (*Sumas Deposits*) Till (*Sumas Till*), glaciofluvial channel, floodplain, and deltaic deposits (*Abbotsford Outwash and Huntingdon Gravel*), glaciolacustrine and glaciofluvial ice-contact deposits (*Abbotsford Outwash*).	Sumas Stade 11 000? - 11 400? BP
FORT LANGLEY FORMATION Interbedded marine and glaciomarine deposits (*Whatcom Glaciomarine Deposits*); may include fluvial deposits. Glaciofluvial deltas (*Huntingdon Gravel*), glaciofluvial ice-contact deposits (*Abbotsford Outwash*), and till diamicton.	Probably represents more than one ice advance, originally called Everson Interstade 11 400 - 13 000 BP
VASHON DRIFT (*Vashon Deposits*) At least three till diamictons (*Surrey Till*), glaciofluvial channel, floodplain, and deltaic deposits (*Maryhill Outwash and Haney Outwash*), glaciofluvial ice-contact deposits (*Maryhill Outwash*), and glaciolacustrine deposits.	Vashon Stade 13 000 - 18 000 BP
QUADRA SAND (*Quadra Sediments, Colebrook Gravel, and Point Grey Beds*) Advance proglacial sediments of Fraser Glaciation; in part synchronous with, in part younger than, and in part older than Coquitlam Drift.	18 000 - 26 000 BP
COQUITLAM DRIFT Till diamictons and till-like mixtures of possible glaciomarine origin.	Pre-Vashon Stade 19 000 - 22 000 BP; may be equivalent of Evans Creek Stade.
COWICHAN HEAD FORMATION Bog and swamp deposits interbedded with flood-plain sediments overlying marine sediments.	OLYMPIA NONGLACIAL INTERVAL (Middle Wisconsin) (*Olympia Interglacial*) 25 800 - 43 000 BP
COWICHAN HEAD FORMATION (?) Organic colluvium, peat, silt, and sand.	Cowichan Head Formation probably extends back more than 58 000 BP, but this is the only finite date in this part of section.
SEMIAHMOO DRIFT (*Semiahmoo Deposits*) At least two till diamictons (*Semiahmoo Till*), glaciomarine, glaciofluvial, and glacio-lacustrine sediments (*Semiahmoo Sediments*).	SEMIAHMOO GLACIATION (Middle Wisconsin and earlier) 62 000 BP
HIGHBURY SEDIMENTS Intertill fluvial, organic, and marine sediments.	HIGHBURY NONGLACIAL INTERVAL (pre-Middle Wisconsin) Beyond the limit of radiocarbon dating.
WESTLYNN DRIFT (*Seymour Deposits*) Till diamicton (*Seymour till*), glaciomarine, glaciofluvial (*Lynn Outwash*), and glacio-lacustrine sediments (*Sisters Varved Clay*).	WESTLYNN GLACIATION (pre-Sangamon)

*See Table 4 for detailed information on types of sediments.

kaolinite, and chlorite in relatively the same proportions plus minor feldspar, amphibole, and dolomite. In this report **clay** is restricted to particles smaller than 0.002 mm. The Fraser River floodplain, channel, and delta deposits were essentially deposited in flat-lying **beds.** The composition of Fraser River gravels is discussed in the section on *Construction Materials.*

The rivers and streams flowing out of the Coast and Cascade mountains normally carry much coarser sediments than does Fraser River. Gravel and sand are deposited in their channels, floodplains, and deltas. Most of their deltas consist of foreset and topset beds.

The mineralogy of pre-Quadra Sand deposits shown in Table 3 has not been studied.

Glaciofluvial deposits probably are the most widespread of the waterlain sediments. They are similar in origin to fluvial sediments except that they are transported by **meltwater** streams flowing from advancing or wasting glacier ice. They may be subdivided into channel and floodplain, deltaic (in part in the sea), and ice-contact deposits.

Table 3. Quaternary stratigraphy

YEARS B.P. (X10³) (scale varies)	TIME-STRATIGRAPHIC UNITS	GEOLOGIC-CLIMATE UNITS	RADIOCARBON DATES (years B.P.)	LITHOSTRATIGRAPHIC UNITS Deposited by ice flowing from N and E ←, N and W→	COMMENTS
5	HOLOCENE	POSTGLACIAL	Salish and Fraser River Sediments: more than forty dates from 12 350± 190 to 570± 100 Capilano Sediments: nine dates ranging from 12 800± 175 to 10 430± 150 Sumas Drift: six dates ranging from 11 700±150 to 11 300±100 Fort Langley Formation: five dates ranging from 12 900±170 to 11 680±180	SALISH SEDIMENTS AND FRASER RIVER SEDIMENTS	See Note 2 of Table of Lithologic Units and Environments of Deposition
10 11 12 13	LATE WISCONSIN	FRASER GLACIATION		SALISH SEDIMENTS CAPILANO SEDIMENTS SUMAS DRIFT FORT LANGLEY FORMATION	Capilano Sediments: glaciomarine and marine sediments deposited when the sea was at least 15m above present sea level. In contrast to similar sediments that comprise a large part of Fort Langley Formation, Capilano Sediments were not overridden by Sumas ice Sumas Drift: these glacial deposits are not overlain by glaciomarine or marine sediments Fort Langley Formation: records at least three local advances and retreats of a valley glacier into the sea
15 17 18			Vashon glaciolacustrine sediments: two dates 18 000±150 and 17 800±150	VASHON DRIFT	Includes at least three tills. Fluvial dissection occurred between deposition of Quadra Sand and Vashon Drift
20 26			Quadra Sand and Coquitlam Drift: three dates from Quadra Sand (?) ranging from 18 700±170 to 18 300±170 from sediments overlying Coquitlam Drift. Five dates from Coquitlam Drift ranging from 22 700± 320 to 21 600±200. Four dates from Quadra Sand ranging from 26 100±320 to 24 400±900	QUADRA SAND COQUITLAM DRIFT	Quadra proglacial deposits were formed during local advances and retreats, such as the Coquitlam, and during the main Vashon ice advance Coquitlam Drift: Coquitlam ice probably represents an advance and retreat that occurred in Coquitlam Valley before Vashon ice moved into the area
30 35 41	MIDDLE WISCONSIN	OLYMPIA NONGLACIAL INTERVAL	Fourteen dates ranging from 29 600±200 to 25 800±310. Five dates ranging from 36 200± 500 to 31 000±520 Two dates 40 500±1700 and 40 200±430. Three dates >39 000 to >36 800	COWICHAN HEAD FORMATION	Olympia nonglacial interval sediments consist of subaerial deposits marked by unconformities. One such unconformity, recognized at the Mary Hill gravel pit, separates sediments from 26 000 to 30 000 years old from sediments 40 000 years old
50 60			One date at 58 800 $^{+2900}_{-2100}$ Five dates ranging from >37 000 to >43 000	COWICHAN HEAD FORMATION ?	Cowichan Head Formation? sediments are not seen in contact with sediments identified as Cowichan Head; however they appear to be part of the same lithostratigraphic unit
>62	EARLY WISCONSIN AND PRE-WISCONSIN	SEMIAHMOO GLACIATION	Eight dates ranging from >31 000 to >62 000	SEMIAHMOO DRIFT	Believed to be Early Wisconsin. Includes at least two till units plus glaciofluvial and glaciomarine sediments. Semiahmoo Glaciation probably similar in complexity and duration to Fraser Glaciation
THE OLDEST UNITS PROBABLY ARE SEVERAL HUNDRED THOUSAND YEARS OLD		HIGHBURY NONGLACIAL INTERVAL	Six dates ranging from >44 000 to >54 000	HIGHBURY SEDIMENTS	May be equivalent of Sangamon interglacial
		WESTLYNN GLACIATION	No dates have been obtained on materials known to be from this stratigraphic interval. Some of the above dates that are beyond the range of radiocarbon dating may be on materials that belong in this position	WESTLYNN DRIFT	Very poorly exposed. Westlynn Glaciation probably similar in complexity and duration to Fraser Glaciation
				OLDER SEDIMENTS	

GSC

Table 5. Classification of sediments

AUTHORITY	DESIGNATION										
TRADE NAME	MINUS 200 MESH, FINES, MINERAL FILLER		FINE AGGREGATE					COARSE AGGREGATE			
Wentworth	Clay	Silt	Very fine sand	Fine sand	Med. sand	Coarse sand	Very coarse sand	Granule	Cobble	Boulder	
American Society for Testing Materials	Clay	Silt	Fine sand	Coarse sand	Gravel						
United States Dept. of Agriculture	Clay	Silt	Very fine sand	Fine sand	Med. sand	Coarse sand	Very coarse sand	Fine gravel	Coarse gravel	Cobbles	
Unified Soil Classification	Fines (silt and clay)		Fine sand	Medium sand	Coarse sand	Fine gravel	Coarse gravel	Cobbles			
American Association of State Highway Officials	Clay	Silt	Fine sand	Coarse sand	Fine gravel	Medium gravel	Coarse gravel	Boulders			
United States Bureau of Soils	Clay	Silt	Very fine sand	Fine sand	Med. sand	Coarse sand	Gravel				
U.S. STANDARD SIEVE SIZES											
INCHES	200 140 100 50 40 30 16 10 8 4										
MILLIMETRES	.0029 .0059 .0117 .0232 .0469 .0787 .157 1/4 1/2 3/4 1 1½ 2 3 6 10										
	.002 .005 .01 .05 .1 .125 .25 .5 1. 2. 4. 10 100 1000										

GSC

The channel and floodplain sediments were deposited in flat-lying beds. The deltaic deposits, which in a large part consist of gravel, sandy gravel, and gravelly sand, normally display dipping **foreset beds** overlain by flat-lying **topset beds.** These glaciofluvial **(outwash)** deposits are the source of most of the gravel and much of the sand quarried in the Fraser Lowland. The composition of the gravels is discussed in the section entitled *Construction Materials.* Except in the case of Quadra Sand, no detailed study has been made of the glaciofluvial sands. On cursory examination by hand lens they appear to consist largely of quartz, **plagioclase** feldspar, and rock fragments with minor amounts of **ferromagnesian** and **opaque** minerals and orthoclase feldspar. The proportions of the above minerals and rock fragments vary from place to place within lithologic units and from unit to unit. Clague (1977, p. 12) stated that type C (Quadra Sand) "occurs only at Vancouver (49°14'-17'N, 123°12-16'W) and consists mainly of volcanic rock fragments (including glass), feldspar, and quartz. Hypersthene is the dominant heavy mineral; hornblende is less common ... Type C sand includes detritus of both granitic and volcanic origin. The provenance of the volcanic component is the Mount Garibaldi area, located about 70 km north of Vancouver. The volcanic detritus is mixed with sediment eroded from granitic rocks of the Coast Mountains.

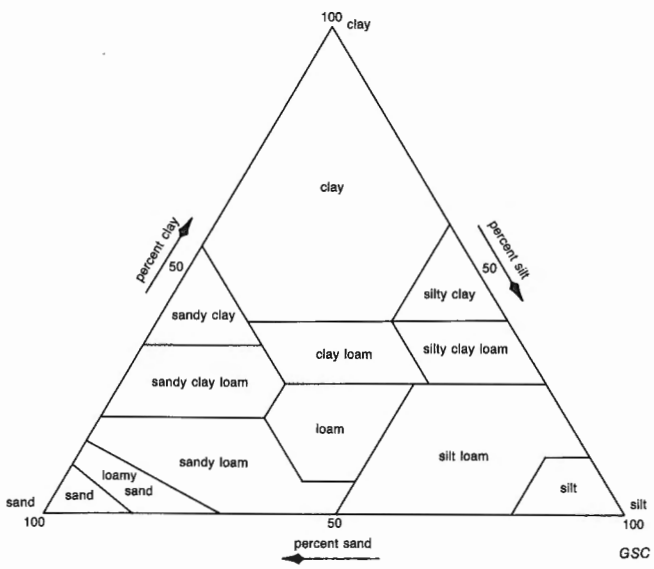

Figure 4. Percentages of clay (<0.002 mm), silt (0.002-0.05 mm), and sand (0.05-2.0 mm) in basic pedological textural classes (from U.S. Department of Agriculture Soil Survey).

Note that the term clay is used both to describe a size fraction, as illustrated here, and to describe a group of minerals that are primarily hydrous aluminum silicates. The clays in the Fraser Lowland consist mainly of the common rock-forming minerals, quartz, feldspar, ferromagnesian and opaque minerals plus rock fragments.

"At Vancouver sediment from the lower part of the Quadra Sand contains more hypersthene and volcanic rock fragments and less quartz, feldspar, and hornblende than sediment from the upper part of the unit". Clague's type C Quadra Sand does not extend to the Coquitlam-Maryhill area, approximately 30 km eastward; microscopic examination of the sand in this latter area showed no **hypersthene** but an abundance of quartz, plagioclase feldspar, and ferromagnesian minerals with a much lesser amount of rock fragments. This sand obviously represents detritus eroded from the Coast Mountains.

Ice-contact sediments are poorly to well stratified drift deposited in contact with melting glacier ice. They may consist of a mixture of pebble to cobble gravel containing clasts of glacier ice and **glaciomarine** sediments. They normally exhibit slump structures due to the fact that at time of deposition blocks of ice were entrapped and later melted. Ice-contact sediments are common in the Fraser Lowland, particularly in association with Sumas Drift and Fort Langley Formation.

Most of the glaciofluvial and pre-Salish nonglacial sediments have, in part, as their source older unconsolidated sediments that have been eroded and transported by the action of water or ice and have been redeposited downstream or in front of the moving glaciers. For example, pre-Fraser (Table 3) fluvial and glaciofluvial sediments were eroded, transported, and redeposited during Fraser Glaciation, some as glaciofluvial sediments and some as glacier ice sediments.

Glacier Ice Sediments

Sediments deposited directly on the land by glacier ice are called **till** and are commonly separated into **lodgment** (basal), **ablation** (meltout), and **flow tills.** All three types of till are found in the Fraser Lowland, with lodgment till being by far the most common.

The lodgment tills deposited by the Westlynn, Semiahmoo, Coquitlam, and Vashon **glaciers** are very compact, unsorted mixtures of sand, silt, clay, pebbles, cobbles, and boulders. The fine fraction, that is the sand, silt, and clay, is in a large part comminuted rock consisting of quartz, feldspar, minor other minerals, and rock fragments. Most of the grains are angular. Rock flour is the finely powdered, pulverized material. The compactness (preconsolidation to the geotechnical engineer) may be explained by the process of lodgment wherein fine grained rock flour is forcibly pressed into voids between larger particles during the gradual plastering on and shearing beneath a slowly moving **ice sheet** or by the loading of the overlying glacier ice (Dreimanis, 1976). The pebbles, cobbles, and boulders may comprise up to 50% of the till but commonly comprise less than 25%. They are largely made up of Coast Mountains granitic and associated rocks. Rounded stones are common **clasts** in the lodgment tills in the Fraser Lowland rather than the exception, indicating that they were not plucked from bedrock but were derived in a large part from older fluvial and glaciofluvial deposits. Where till lies directly on bedrock on the slopes of the Coast and Cascade mountains, angular clasts derived from the bedrock make up from 25% to 90% of the total.

Mechanical analyses of the fine fractions of lodgment till samples have yielded the following results: Westlynn till (1 sample), 9.2% clay, 49.5% silt, and 44.3% sand; Semiahmoo till (3 samples), 8.6% clay, 42.3% silt, and 49.4% sand; and Vashon till (9 samples) 2.7% clay, 40.1% silt, and 57.2% sand.

The lodgment tills are in a large part plastered on pre-existing landscapes and consequently may have depositional dips exceeding 15 degrees in places (see cross-sections in Armstrong, 1980a; Armstrong and Hicock, 1980a,b).

Sumas lodgment tills are also heterogeneous mixtures of sand, silt, clay, pebbles, cobbles, and boulders. The coarse materials, pebbles and larger, have been derived in a large part from rocks in the Cascade Mountains. These tills have not been compacted to the degree that the older lodgment tills have, probably because the Sumas tills have been **preloaded** by only one, relatively thin glacier.

Mechanical analyses of the fine fraction of four samples of Sumas lodgment tills showed 4.0% clay, 39.5% silt, and 56.5% sand.

No mechanical analyses or mineralogical studies have been done on Coquitlam or Fort Langley lodgment tills. Coquitlam tills are similar to Vashon lodgment tills, and Fort Langley tills are similar to Sumas lodgment tills.

The only lodgment tills that occur widely at the surface are the Vashon in the western part of the Fraser Lowland (Armstrong and Hicock, 1980a,b) and the Sumas in the eastern part (Armstrong, 1980a,b).

Ablation tills are widespread above elevations of 165 m where they overlie lodgment till. They contain less than 5 to 10% silt and clay and the remainder is sand, gravel, and boulders. They are not compact and in many places are difficult to distinguish from Capilano **beach** deposits and Salish **colluvium.** Excellent exposures of ablation till may be seen in the drumlinized area intersected by the Dewdney Trunk Road between Websters Corners and Stave Falls.

Flow tills have been identified in Vashon, Coquitlam, Fort Langley, and Sumas ice contact deposits. They are similar in composition to the lodgment tills and their degree of compactness depends on their age, the youngest being less compact. Till mapped as lodgment till may exhibit flow structures probably because some melting has taken place at the glacier ice-land interface.

Glaciomarine and Glaciolacustrine Sediments

Another widespread group of sediments found in the Fraser Lowland are the **glaciomarine deposits.** Prior to field work by the author, most of the glaciomarine sediments in the study area were referred to as till. The two groups of sediments should be separated not only because they have different environments of deposition, but also because they normally have different compositions and physical properties.

As can be seen in Table 4, the glaciomarine deposits are of mixed origin consisting of marine sediments (seafloor muds) into which ice-rafted stones and other rock debris have been dropped. The seafloor muds were in a large part transported to the sea by glacial meltwater. The glaciomarine sediments consist of stony silty clay **loam,** stony silt loam, stony silt, and till-like mixtures. In places these sediments were redeposited by the action of slumping and sliding or by the push of grounded ice. All gradations between primarily glacial and primarily marine sediments occur, especially where a grounded glacier terminates in the sea, where it calves and blocks of ice (icebergs and smaller) float out to sea. At the ice-sea interface the environment would be mostly glacial and **proglacial** but would acquire normal marine characteristics as the distance from the land-anchored glacier increased.

Glaciomarine sediments, exclusive of till-like mixtures, generally consist of more than 95% clay, silt, and sand in the following proportions: 10-50% clay, 35-75% silt, and 5 to 60% sand. Frequency curves in Armstrong (1981) illustrate that the proportions of clay, silt, and sand vary greatly from place to place; they also show that Fort Langley glaciomarine sediments contain the highest per cent of clay.

No detailed mineralogical study has been made on the fine constituents comprising the larger part of the glaciomarine sediments. They are likely in a large part glacial rock flour transported to the sea by meltwaters and consist of feldspar, quartz, and other common rock **minerals. Pedological** studies (Ahmad, 1955) suggest that the fine fraction must contain some minerals of high base exchange capacity such as montmorillonite, hydrous mica, illite, and related minerals.

In 1982 drillhole specimens of glaciomarine sediments from the Annacis Island area were provided to the writer by Golder Associates of Vancouver. The samples, which were obtained from Capilano glaciomarine clayey silt approximately 65 to 80 m below sea level and Semiahmoo? glaciomarine sediments 115 to 120 m below sea level, were analyzed by L. Lavkulitch of the Soils Department of the University of British Columbia.

The Capilano Sediments consisted of 34% clay, 58% silt, and 8% fine sand. The qualitative percentage of the clay-sized minerals was as follows: greater than 50% montmorillonite; 30 to 50% chlorite; and 10 to 30% kaolinite. The silt and sand-sized fractions consisted of, in order of abundance: plagioclase feldspar, quartz, amphibole, chlorite, kaolinite, and mica.

The Semiahmoo glaciomarine samples consisted of 43% clay, 38% silt, and 19% sand. The qualitative percentage of the clay-sized minerals was reported as follows: greater than 50% chlorite; 30 to 50% montmorillonite; less than 10% kaolinite; less than 10% mica;

less than 5% vermiculite; and less than 5% quartz. The minerals in the silt and sand-sized fractions, in order of abundance, were quartz, plagioclase feldspar, chlorite, kaolinite, amphibole, and mica.

The glaciomarine sediments where they have not been **preloaded** by younger ice or overlying sediments are poorly compacted. They have higher void ratios and lower **bulk densities** than the lodgment tills (Easterbrook, 1964). Detailed information on these deposited is given in Armstrong (1981).

Glaciolacustrine sediments have very limited distribution in the Fraser Lowland (Armstrong, 1980a,b; Armstrong and Hicock, 1980a,b). They normally consist of **varved** clays, silts, and sands which contain scattered ice-rafted dropstones. No mechanical analyses or mineralogical studies have been made on these sediments.

Other Sediments

Colluvial sediments are products of **mass wasting** and include slide and **fan deposits.** They vary greatly in composition which is dependent on the source materials. They are best exposed in the eastern half of the Fraser Lowland in the form of steep fan and slide deposits at the base of steep slopes (see section on *Landslides*). Most of the mountain slopes have thin mantles of colluvium consisting largely of pebbles, cobbles, boulders, and pieces of talus in a matrix consisting largely of sand.

Eolian (windblown) deposits are widespread in areas where Sumas Drift is at or near the surface and consist of fine well graded sand and minor silt derived from Sumas Drift. They occur up to elevations of at least 450 m and probably higher in the Chilliwack map area (Armstrong, 1980b).

Organic sediments occur in Salish Sediments, the Cowichan Head Formation, and the Highbury Sediments (see Table 4 for details on composition).

Mapping of Surficial Deposits

The deposits at the land surface are the youngest found in the area. In places younger deposits may have been removed by erosion. The maps represent primarily a two dimensional distribution of the youngest deposits. Except in widely separated natural or man-made exposures, in most places too small to map at a scale of 1:50 000, the maps convey very limited information on the third dimension (vertical).

The geological investigations from which the surficial maps were produced consisted of examining in the field the material below the agricultural soil. All outcrops in road and railway cuts, drainage ditches, seacliffs, stream and river gullies and canyons, slide areas, gravel and sand pits, and building excavations and tunnels (observable at the time of study) were examined and the geological information obtained was plotted on a topographic map base at a scale of 1:25 000. Where necessary, holes were dug or augered in order to obtain further geological data. Other major sources of geological information were:

1. Drill records of several thousand water wells in the Fraser Lowland, mostly south of Fraser River.
2. In the metropolitan area of Vancouver, additional geological information has been obtained from hundreds of engineering drill records.
3. The pedological soil maps of the Fraser Lowland have been another invaluable source of information (Holland et al., 1957; Sprout et al., 1961; Comar et al., 1962; Runka et al., 1964; Luttmerding et al., 1966, 1967, 1968, 1969, 1972).

The classification of sediments according to the size of the particles has not been standardized for all users of such information (Table 5). Various classifications have been devised in order to satisfy particular requirements, for example highway construction design. As stated previously, the classification by the United States Department of Agriculture (Table 5) is used in this report. Also, in the use of names for particles less than 2 mm in diameter – that is sand, silt, and clay – the United States Department of Agriculture terminology (Fig. 4) has been adopted. Size distribution of particles comprising a sediment is determined by mechanical analyses, at least 50 of which were done in the laboratories of the Geological Survey of Canada. This information was greatly augmented when the British Columbia Department of Agriculture carried out agricultural soils mapping east and south of the metropolitan area of Vancouver (see section on *Agricultural Soils*).

As a result of the variation in the size of the particles of a sediment constituting a **map unit** and because of the discontinuous nature of many units, some of the **geological boundaries** shown on the maps are gradational. In many places it has been necessary to interpolate data over distances of several hundred metres. More detailed studies may show in places errors in boundary positions as great as several hundred metres; however, in the Fraser Lowland, below 200 m elevation, the writer believes that boundary errors are commonly less than 100 m.

Other difficulties encountered in mapping the surface geology included 1) poor exposures; 2) map units too thin to map separately; 3) discontinuous units; and 4) units that cannot be assigned with confidence to their proper **formation.** As a result, compromises to the ideal have been made and the map units in the **legends** accompanying the surficial geology maps (Armstrong, 1980a,b; Armstrong and Hicock, 1980a,b) reflect this. In other places, as a result of a wealth of information, the major lithologic units are further subdivided into minor map units according to the **lithology** of the sediments. In some places the map units are differentiated on the basis of underlying sediments or bedrock. The sediments comprising each map unit are listed in order of abundance from most to least. Again in the legends, insofar as possible, the oldest unit is shown at the bottom and the youngest at the top. For information on age relations refer to Table 3.

As the same principles apply to all the legends accompanying the four surficial geology maps of the Fraser Lowland, one legend, that of the New Westminster map area (GSC map 1484A, Armstrong and Hicock, 1980a) will be used here to enlarge upon the statements made, above. Salish Sediments (SA) are divided into eleven lithologic map units (SAa-k) based on environment of deposition, physical nature of the sediments, and in some places on the nature of the underlying sediments. Fraser River Sediments (F) are grouped into four lithologic units (Fa-d) for the same reasons. In places a combination of Salish Sediments (SA) and Capilano Sediments (C) is one lithologic map unit (SA-C) where it has not been possible to separate the two formations. Sumas Drift (S) is divided into five lithologic map units (Sa-e) primarily according to the environment of deposition, although one lithologic unit is subdivided into two map units based on the thickness of the top unit. Fort Langley Formation (FL) is split into five lithologic map units (FLa-e) based on the environment of deposition. Capilano Sediments (C) are mapped as five units (Ca-e), some of which are lithologic units only and others take into account the thickness of the top unit plus the nature of the underlying sediments. In nonagricultural areas Vashon Drift (V) and Capilano Sediments (C) are commonly combined into one unit (VC). Normally, the younger Capilano Sediments do not exceed 3 m in thickness. Vashon Drift (V) is mapped as two units (Va-b) separated into sediments deposited primarily by

ice and sediments deposited by meltwaters flowing from ice. Pre-Vashon deposits (PVa-h) appear at the surface only in cliffs, slides, and man-made exposures, none of which have an areal extent large enough in which to map the formations separately (cf. Tables 2,3,4); Pre-Vashon deposits are separated in some of the cross-sections accompanying the maps and their nature and extent is indicated in the following section. Finally, bedrock is mapped as two units (Tertiary and pre-Tertiary).

Subsurface Geology

Table 3 shows the stratigraphic sequence of the Quaternary sediments found in the Fraser Lowland. The apparently obvious, although in many places inaccurate, method of determining the subsurface Quaternary geology of an area would be to count down from the top (youngest) formation through progressively older formations and identify them by their lithology and apparent stratigraphic position. This somewhat simple method of **correlating** subsurface Quaternary formations ignores, however, the Quaternary geological history of the area (see *Quaternary History* section).

The pre-Middle Wisconsin Semiahmoo and older deposits may be seen in widely spaced natural and man-made exposures. Similar deposits are also intersected in many drillholes. Table 4 illustrates the complex variety of lithologically similar units found in all the **drift** deposits including the Vashon. Similar complexity occurs in the nonglacial sediments. The areal distribution of each lithologic unit is unknown because of the fragmentary information available. This limited knowledge about these older (pre-Middle Wisconsin) drift and nonglacial units is in a large part due to their poor exposure and the unreliability of drillhole information especially as these deposits are too old to date by radiocarbon dating methods. Also much difficulty is encountered in applying standard stratigraphic interpretations and lithologic correlations. Without radiocarbon dates the stratigraphic succession of pre-Vashon deposits may be incorrectly interpreted for the following reasons: (1) The deposits related to the Semiahmoo and Westlynn glaciers contain lithologically similar units which may be attributed to the wrong glaciation on the basis of lithology only. The same applies to the nonglacial Cowichan Head, Highbury, and other sediments. (2) Deposits related to the pre-Vashon units may be in part or entirely missing as a result of one or more later erosional intervals as explained in the next section.

Taking the Quaternary history of the area into account and because of the difficulties outlined above, only in a few localities have most of the pre-Vashon lithologic units been positively identified. The Highbury Street Tunnel probably provided the most complete section (Armstrong and Hicock, 1980b).

In order to illustrate and emphasize these stratigraphic and mapping problems, the physical features of the area have been subdivided on the basis of the material at and immediately below the surface. This has been done to enable the reader (and map user) to obtain a qualitative description of how one area differs from another. Thus, it is hoped, the user will get a general understanding of and feel for the area without having to know all the complexities of the subsurface geology. The stratigraphy is illustrated by actual, reconstructed, diagrammatic, and composite sections and cross-sections. The locations of the sections are shown on Figure 2.

Uplands

Surficial deposits on uplands form gently rolling and flat-topped areas between 20 and 175 m elevation. They range in area from small hills, such as Mary Hill (3 km^2), to large upland areas up to 650 km^2. The largest area extends from Murrayville east to Abbotsford and from the International Boundary north to Fraser River Valley. According to their Quaternary geological history, these areas may be separated from one another as listed below.

Vashon Drift at or Within 10 m of the Surface

Where Vashon Drift is not at the surface it is commonly overlain by Capilano glaciomarine, **intertidal,** and beach deposits; in a few places it is overlain by Salish Sediments. The original Vashon depositional surface has been modified by marine processes that produced Capilano Sediments; consequently, the present landscape reflects these marine processes rather than the glacial processes. Vashon Drift was deposited on a pre-Vashon surface that is in a large part formed of Quadra Sand, Cowichan Head, and older formations. The drift laid down by Vashon ice resulted in only minor modification of the pre-existing slopes; for example, Vashon Drift is at or near the surface on the south slope of Vancouver city extending from the highest part of Burrard Peninsula to Fraser River where the slope dips south under the Fraser Delta.

The main areas included in this subdivision are: Burrard, Surrey, White Rock, Tsawwassen, and Mary Hill uplands; the representative stratigraphic sections and cross-sections shown in Figures 5,6, and 7 illustrate the complex Quaternary subsurface geology. In most of these areas Vashon Drift is at or near the present day land surface and overlies sediments which constitute one or more pre-Vashon upland areas, that is, it may directly overlie any one of the pre-Vashon formation shown in Tables 3 and 4. In only a few places has the next oldest formation – Quadra Sand – been identified immediately below Vashon Drift (Fig. 5, sections 1-8; Fig. 6, sections 11,15). In other places probable Quadra Sand and Coquitlam Drift underlie Vashon Drift (Fig. 6, sections 9,10,12-14; Fig. 7, sections 18-21). In still other places Semiahmoo Drift is directly overlain by Vashon Drift (Fig. 5, section 4; Fig. 7, section 17). Additional complexities shown in the sections are as follows: the Vashon Drift apparently includes in places up to three tills and **interbedded** glaciofulvial deposits (Fig. 5, sections 3,4; Fig. 7, sections 16,17) and the older drifts may show the same complexity (Fig. 5, sections 2,3; Fig. 7, section 17). The nonglacial deposits may include one or more pre-Vashon units and lithologically similar deposits may be correlated only on the basis of educated guesswork. Many of these features were described by Armstrong and Hicock, 1975, 1976).

Capilano Sediments More Than 10 m Thick at the Surface

Included here are upland areas of two types, namely (1) raised glaciofluvial deltas originally deposited in the sea area and (2) upland areas (similar to the Vashon Drift uplands already described) in which the Capilano glaciomarine and marine sediments are more than 10 m thick.

The raised deltas of Capilano Sediments are found mainly in the lower basins of Capilano, Seymour (including Lynn), the Coquitlam rivers (Fig. 3). The deltas at their back commonly exceed elevations of 175 m. They are normally terraced, with each **terrace** having a relatively flat surface (Fig. 8), and are underlain by thick deposits of deltaic sand and gravel which overlie Capilano marine and glaciomarine sediments. These deltas were formed as the rivers developed during post-Vashon **deglaciation** (13 000 to 11 000 BP).

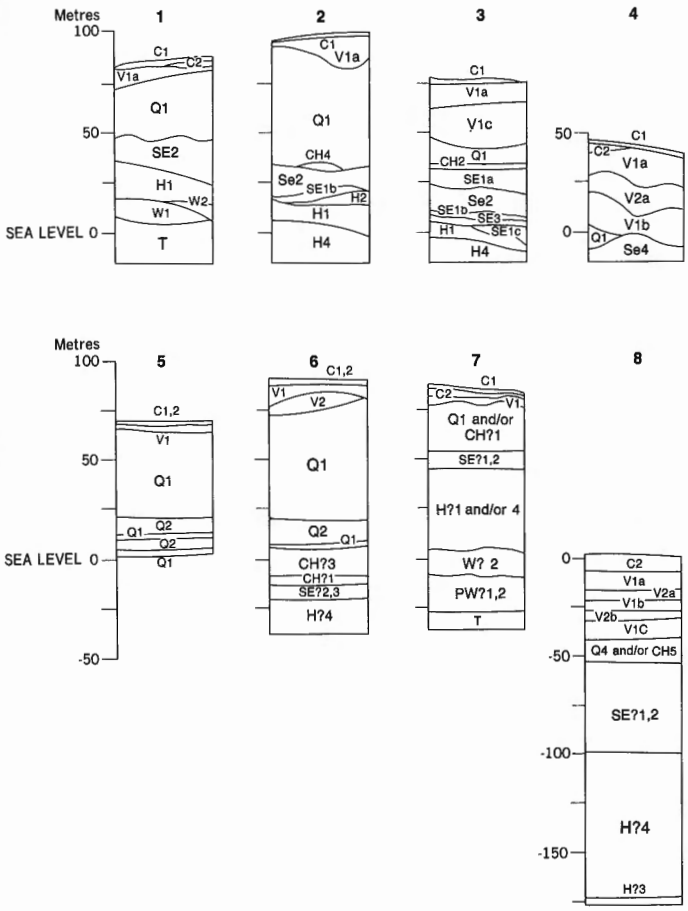

SURFICIAL DEPOSITS

CAPILANO SEDIMENTS (C)

- C1 Beach gravel
- C2 Glaciomarine stony silt to clay loam

VASHON DRIFT (V)

- V1 Sandy, loamy lodgment till; a,b,c, youngest to oldest
- V2 Glaciofluvial pebble to boulder gravel and sand; a,b,c, youngest to oldest

QUADRA SAND (Q)

- Q1 Fine to coarse sand; minor silt and gravel
- Q2 Interbedded silt, fine sand, and minor peat
- Q4 Silt, sand, and silty clay, minor gravel; probably of marine origin

COWICHAN HEAD FORMATION (CH)

- CH2 Silt, silty clay, and sand; peat beds in places
- CH3 Sandy gravel and gravelly sand
- CH4 Organic colluvium and peat
- CH5 Marine silt, silty clay, and sand; lenses of gravel

SEMIAHMOO DRIFT (SE)

- SE1 Loamy lodgment till, minor lenses of sand and gravel; a,b,c, youngest to oldest
- SE2 Glaciomarine and marine, stony silt loam, clayey silt, and silty clay
- SE3 Silty sand to sandy gravel; in places pumice rich
- SE4 Glaciolacustrine silt, silty clay, and fine sand

HIGHBURY SEDIMENTS (H)

- H1 Silt, silty sand, minor gravel; lenses of gravelly sand
- H4 Marine fine sand, silty sand, silt, clay, and minor gravel

WESTLYNN DRIFT (W)

- W1 Silty loamy lodgment till
- W2 Glaciomarine stony silty clay loam

PRE-WESTLYNN SEDIMENTS (PW)

- PW1 Sand and gravel; 1a, glaciofluvial?; 1b, marine?
- PW2 Probably marine silt, clay, and minor sand

BEDROCK

TERTIARY BEDROCK (T)

PRE-TERTIARY BEDROCK (PT)

GSC

Figure 5. *Stratigraphic sections in which Vashon Drift is at or within 10 m of the surface – Burrard Peninsula.*

Section 1. along Highbury Tunnel, 49°15.4'N, 123°11.2'W; based on drillhole information (courtesy W.L. Brown, Brown, Erdman, and Associates Ltd.).
2. same as (1), except at 49°15.0'N, 123°11.2'W.
3. same as (1), except at 49°14.5'N, 123°11.2'W.
4. same as (1), except at 49°14.1'N, 123°11.2'W.
5. seacliffs at Point Grey, University of British Columbia Endowment Lands, 49°16.5'N, 123°15'W (centre).
6. biosciences water well, University of British Columbia, 49°16'N, 123°14.5'W; based on drillhole information (courtesy E. Livingstone, Pacific Hydrology Consultants Ltd.).
7. composite section Oakridge (Woodward's) Shopping Centre, 49°14'N, 123°7'W (centre); based on drillhole information (courtesy W.L. Brown).
8. drillhole section near southwest Marine Drive at south end of Granville Street, Vancouver, 49°12.2'N, 123°8.2'W.

Although the geological history of the Fraser Delta may be complicated by more than one adjustment of the land-sea relationship, in general they were deposited during a relative lowering of sea level and consequently the highest terraces contain the oldest sediments (Fig. 8, cross-section 24).

Only one major upland area – between Serpentine and Nicomekl valleys north and east of Cloverdale (Fig. 3) – is covered by Capilano glaciomarine and marine sediments more than 10 m thick. Sections 22,23 (Fig. 8) show that the stratigraphy is similar to that underlying the Vashon uplands except for the thicker Capilano Sediments.

Fort Langley Glaciomarine Sediments at or Within 10 m of Surface

Much of the western half of the large upland area south of Fraser River in the central part of the Fraser Lowland has Fort Langley glaciomarine sediments exposed at the surface or below a thin mantle of Sumas Drift. This area extends from the Fort Langley area east 27 km to Sumas Mountain and valley and south from Fraser River 17 km to the International Boundary (Fig. 3). Part of this upland has been overidden by Sumas ice and in places Sumas till and/or glaciofluvial sediments from less than 1 m to 10 m thick are found (see *Sumas Drift*). A second large upland area in which Fort Langley glaciomarine sediments occur at or near the surface lies north of Fraser River and stretches from near Haney 20 km east to Stave River and north 5 km to the front of the Coast Mountains (Fig. 3) along the Dewdney Trunk Road (Highway). The surfaces of these uplands range from 30 to 165 m above sea level with the greater part of the area lying between 65 and 165 m. The **microtopography** of the uplands varies from hummocky (up to 10 m relief) in the east to nearly flat in the west. The uplands are dissected by several major gullies, some occupied by small streams including Nathan, Bertrand, and Kanaka creeks and Salmon River. Other gullies, particularly near the International Boundary, are Sumas meltwater channels with no established drainage pattern, although they are occupied in part by present day streams such as Campbell River and Bertrand Creek.

The underlying Vashon or probable Vashon Drift normally is near or below sea level throughout much of these two major areas. Drillhole records indicate that Fort Langley sediments range in thickness from 30 m to more than 165 m. In bedrock areas north of Fraser River the thickness of Fort Langley sediments is less than 30 m.

The Fort Langley Formation exposed in the Fort Langley area consists of a sedimentary sequence with the older units at lower elevations and the younger units at higher elevations (Fig. 9, sections 25-34), suggesting a rising sea level at time of deposition in this area. Note that in many sections (Fig. 9), in addition to a glaciomarine stony silty clay loam at or near the surface, one or more similar older units occur interbedded with glaciofluvial deltaic sand and gravel, marine silt and clay, and till. The surface glaciomarine stony silty clay unit ranges in thickness from 3 m to 60 m and consequently is the material that is of primary concern to the users of the land.

Because of the lack of radiocarbon dates and exposures, the correlation of the units underlying the Fort Langley Formation is in most places problematical, and those suggested by the drillhole records (Fig. 9, sections 29-33) are based on my overall knowledge of the geology. The few organic samples obtained from drillhole material were too old to date. For example, no materials that could be correlated with Quadra Sand or Cowichan Head Formation have been found; it is possible that (1) these two formations were not deposited in the areas where Fort Langley sediments are at the surface; (2) they were deposited and were completely removed by later erosion; or (3) they were deposited but have not been identified. This last possibility is probably the correct answer.

Fort Langley Ice-Contact Sediments at Surface

Fort Langley ice-contact sediments occur at the surface in only one fairly large area which stretches from near Highway 99 at the International Boundary east 8 km and north and south of the border about 1 km (Fig. 3). The highest elevation on this upland is about 165 m; the ice-contact sediments disappear below Fort Langley glaciomarine sediments at an elevation of about 105 m. The surface is hummocky and contains **kettle holes** suggesting that a **moraine** formed during the decay of ice at the time of retreat of one of the Fort Langley local ice advances. The reconstructed cross-section in Figure 10 shows an interpretation of the geology in this area.

Sumas Drift More Than 10 m Thick at the Surface

The last glaciation in the Fraser Lowland deposited the Sumas Drift. This material was laid down in front of and beneath a piedmont glacier advancing at least 65 km into the Fraser Lowland from the east and northeast about 11 000 BP. The Sumas ice commenced its advance when sea level was at least 90 m higher than at present and withdrew when sea level was within 15 m of the present sea level. Upland areas in which Sumas Drift is more than 10 m thick are discussed here; areas of Sumas Drift less than 10 m thick have been included in the Fort Langley glaciomarine uplands.

A large area of Sumas Drift makes up the eastern half of the upland between Fraser River and the International Boundary in the central part of the Fraser Lowland (Fig. 3). The physical features of this area are described in the preceding section on Fort Langley glaciomarine uplands. Another large Sumas Drift upland about 25 km^2 lies north of Fraser River surrounding the village of Mission City. Other areas of Sumas Drift, especially glaciofluvial deltas, are found farther west.

For the purposes of describing the subsurface geology, the Sumas Drift uplands are subdivided into (1) morainal areas, (2) glaciofluvial areas consisting of raised deltas, originally deposited in the sea, and outwash floodplains, and (3) ice-contact areas.

The morainal areas, which are best observed south and northeast of Abbotsford and in the Mission area, are characterized by a rolling topography with a maximum microrelief of up to 15 m. Sections 35, 36, and 37 of Figure 11 show that these areas consist of till at or near the surface overlying thick deposits of Sumas advance glaciofluvial outwash.

Sumas glaciofluvial deposits occur in two large and several smaller areas. The largest (30 km^2) delta, 1.5 km due south of Langley City, has a flat surface and is 45 m elevation at the front and 55 m at the back. It consists of up to 40 m of sand and gravel overlying Fort Langley sediments (Fig. 11, section 39). The second largest (24 km^2) raised delta is 6.5 km east and north of Langley City. This delta has an elevation of 82 m at the front and 87 m at the back. The subsurface geology is similar to that of the delta south of Langley.

The largest Sumas outwash floodplain surrounds the Abbotsford airport. It has an area of about 20 km^2, the surface is flat, dipping gently from the north to the south (65 m to 45 m). The deposits consist of gravel and sand up to 30 m thick overlying an uneven surface on the underlying Fort Langley sediments (Fig. 11, section 37).

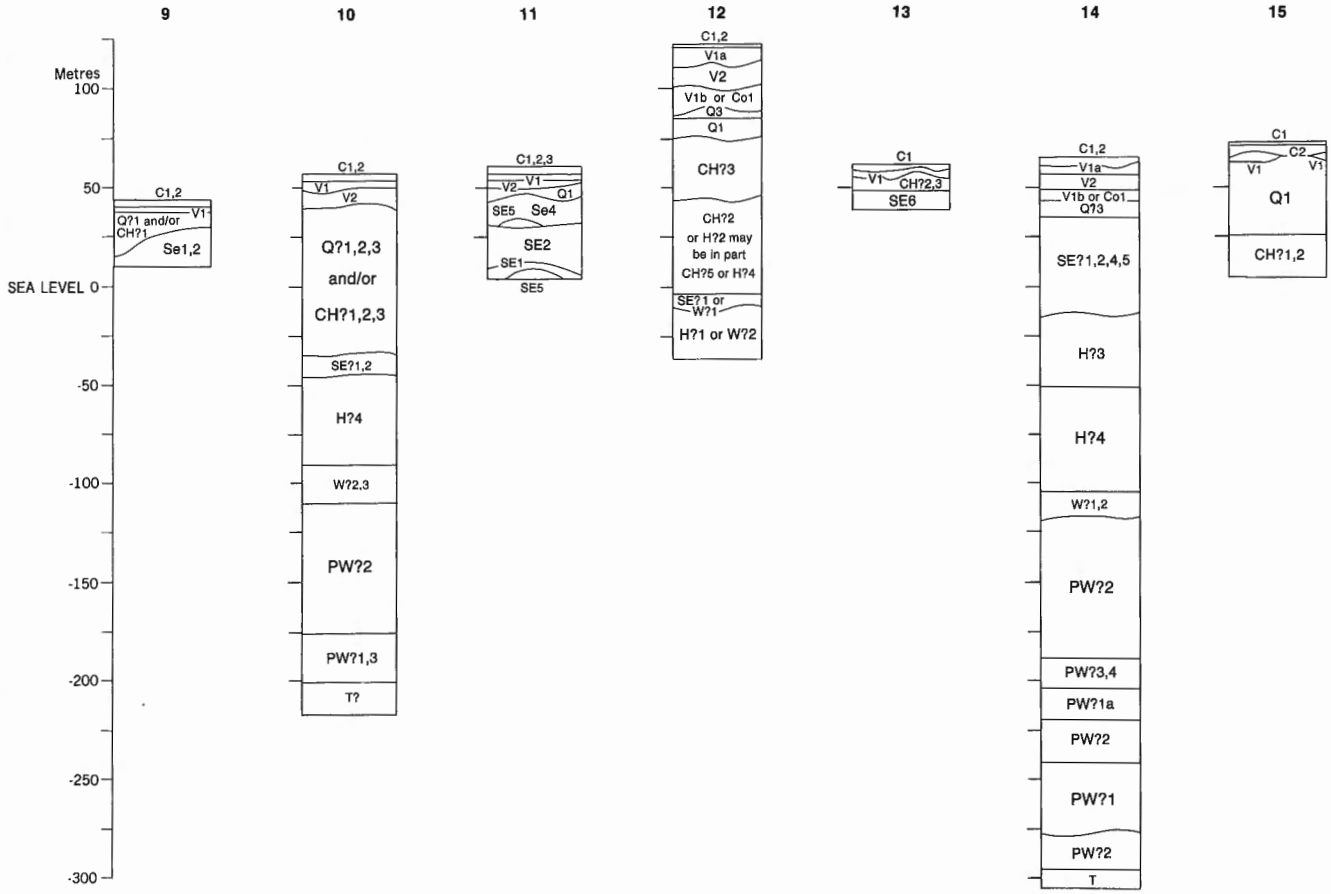

SURFICIAL DEPOSITS

CAPILANO SEDIMENTS (C)

- C1 Beach gravel
- C2 Glaciomarine stony silt to clay loam
- C3 Intertidal sand

VASHON DRIFT (V)

- V1 Sandy, loamy lodgment till; a,b,c, youngest to oldest
- V2 Glaciofluvial pebble to boulder gravel and sand; a,b,c, youngest to oldest

COQUITLAM DRIFT (CO)

- CO1 Sandy loam lodgment till

QUADRA SAND (Q)

- Q1 Fine to coarse sand; minor silt and gravel
- Q2 Interbedded silt, fine sand, and minor peat
- Q3 Sandy gravel and gravelly sand

COWICHAN HEAD FORMATION (CH)

- CH1 Sand and silty sand
- CH2 Silt, silty clay, and sand; peat beds in places
- CH3 Sandy gravel and gravelly sand
- CH5 Marine silt, silty clay, and sand; lenses of gravel

SEMIAHMOO DRIFT (SE)

- SE1 Loamy lodgment till, minor lenses of sand and gravel; a,b,c, youngest to oldest
- SE2 Glaciomarine and marine, stony silt loam, clayey silt, and silty clay
- SE4 Glaciolacustrine silt, silty clay, and fine sand
- SE5 Glaciofluvial gravel and sand; boulder gravel in places
- SE6 Glaciofluvial ice-contact gravel and sand

HIGHBURY SEDIMENTS (H)

- H2 Silty clay, organic silty clay, and peat
- H3 Sand and sandy gravel
- H4 Marine fine sand, silty sand, silt, clay, and minor gravel

WESTLYNN DRIFT (W)

- W1 Silty loamy lodgment till
- W2 Glaciomarine stony silty clay loam
- W3 Glaciofluvial gravel and sand

PRE-WESTLYNN SEDIMENTS (PW)

- PW1 Sand and gravel; 1a, glaciofluvial?; 1b, marine?
- PW2 Probably marine silt, clay, and minor sand
- PW3 Loamy till
- PW4 Glaciomarine stony silty clay loam

BEDROCK

TERTIARY BEDROCK (T)

GSC

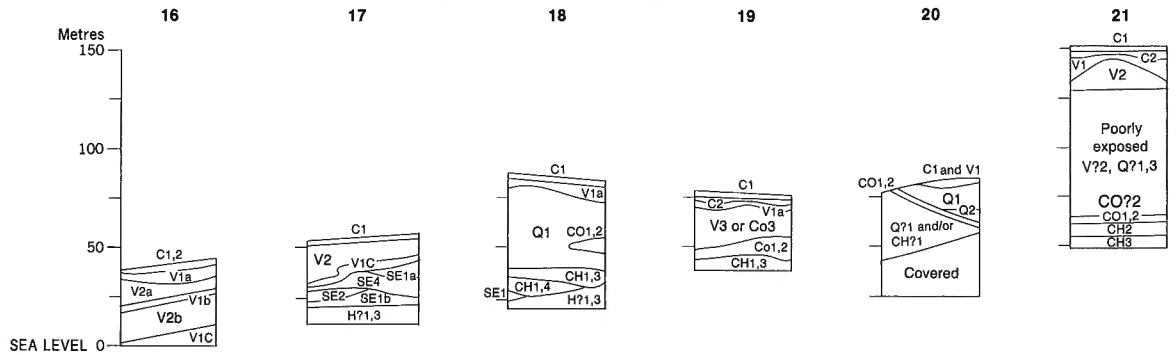

SURFICIAL DEPOSITS

CAPILANO SEDIMENTS (C)

- C1 Beach gravel
- C2 Glaciomarine stony silt to clay loam

VASHON DRIFT (V)

- V1 Sandy, loamy lodgment till; a,b,c, youngest to oldest
- V2 Glaciofluvial pebble to boulder gravel and sand; a,b,c, youngest to oldest

COQUITLAM DRIFT (CO)

- CO1 Sandy loam lodgment till
- CO2 Glaciofluvial gravel and sand
- CO3 Ice-contact gravel and sand

QUADRA SAND (Q)

- Q1 Fine to coarse sand; minor silt and gravel
- Q2 Interbedded silt, fine sand, and minor peat

COWICHAN HEAD FORMATION (CH)

- CH1 Sand and silty sand
- CH3 Sandy gravel and gravelly sand
- CH4 Organic colluvium and peat

SEMIAHMOO DRIFT (SE)

- SE1 Loamy lodgment till, minor lenses of sand and gravel; a,b,c, youngest to oldest
- SE2 Glaciomarine and marine, stony silt loam, clayey silt, and silty clay
- SE4 Glaciolacustrine silt, silty clay, and fine sand

HIGHBURY SEDIMENTS (H)

- H1 Silt, silty sand, minor gravel; lenses of gravelly sand
- H3 Sand and sandy gravel

GSC

Figure 7. *Stratigraphic sections in which Vashon Drift is at or within 10 m of the surface – Port Moody and Mary Hill.*

Sections 16, 17, 18, 19. reconstructed sections in the Mary Hill gravel pit of Construction Aggregates Limited (closed 1976), Mary Hill upland; all four are along at line extending NNE from Fraser River through the pit; 49°13.7'N, 122°46.8'W (centre).

20. section exposed in Port Moody disposal pit on Barnet Highway, Burrard peninsula, 49°17.5'N, 122°52.7'W.

21. composite section on south side face of Burrard peninsula, south of Port Moody, 49°16.5'N, 122°52'W (centre).

(opposite)

Figure 6. *Stratigraphic sections in which Vashon Drift is at or within 10 m of the surface – Tsawwassen, White Rock, and Surrey.*

Section 9. seacliff section at English Bluff, Tsawwassen upland, 49°1.5'N, 123°06'W.

10. Richfield Pure exploration oil well drillhole, Tsawwassen upland, 49°0.2'N, 123°4.5'W (courtesy British Columbia Department of Mines and Petroleum Resources).

11. Ocean Park seacliff section, Semiahmoo Bay, Whiterock upland, 49°1.6'N, 122°52.5'W.

12. water well drillhole section, White Rock upland, 49°2.5'N, 122°49'W (courtesy E.C. Halstead, National Hydrology Research Division).

13. gravel pit Surrey upland, 49°9.4'N, 122°55.5'W.

14. Allenbee South Brazeau exploration oil well drillhole, Surrey upland, 49°9'N, 122°50'W.

15. gravel pit, south side Fraser River, Surrey upland, 49°12.5'N, 122°46.5'W.

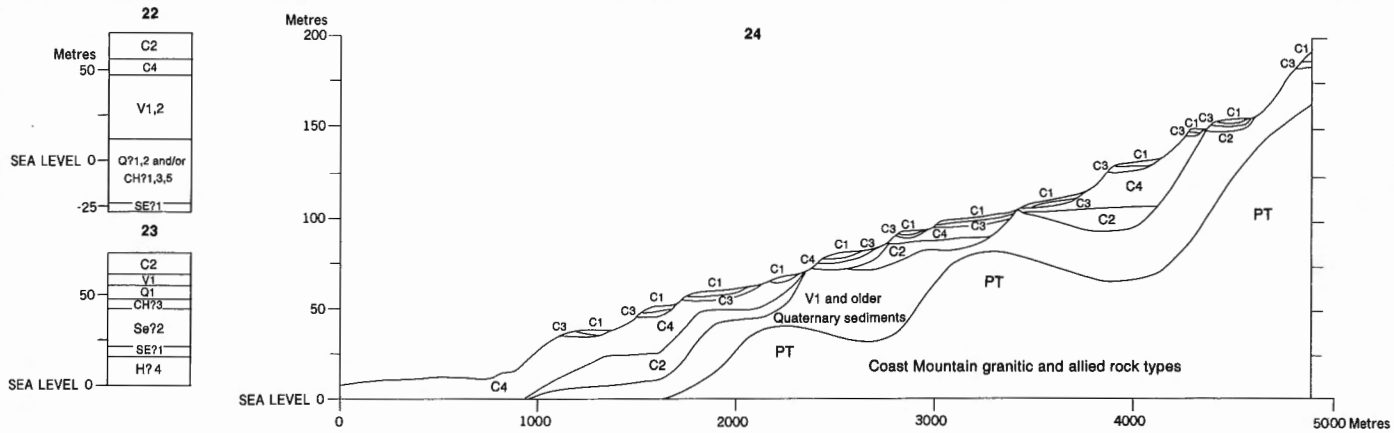

SURFICIAL DEPOSITS

CAPILANO SEDIMENTS (C)

- C1 Beach gravel
- C2 Glaciomarine stony silt to clay loam
- C3 Intertidal sand
- C4 Proglacial deltaic gravel and sand

VASHON DRIFT (V)

- V1 Sandy, loamy lodgment till; a,b,c, youngest to oldest
- V2 Glaciofluvial pebble to boulder gravel and sand; a,b,c, youngest to oldest

QUADRA SAND (Q)

- Q1 Fine to coarse sand; minor silt and gravel
- Q2 Interbedded silt, fine sand, and minor peat

COWICHAN HEAD FORMATION (CH)

- CH1 Sand and silty sand
- CH3 Sandy gravel and gravelly sand
- CH5 Marine silt, silty clay, and sand; lenses of gravel

SEMIAHMOO DRIFT (SE)

- SE1 Loamy lodgment till, minor lenses of sand and gravel; a,b,c, youngest to oldest
- SE2 Glaciomarine and marine, stony silt loam, clayey silt, and silty clay

HIGHBURY SEDIMENTS (H)

- H4 Marine fine sand, silty sand, silt, clay, and minor gravel

BEDROCK

PRE-TERTIARY BEDROCK (PT)

GSC

Figure 8. *Stratigraphic sections in which Capilano Sediments more than 10 m thick occur at the surface.*

Section 22. water well drillhole section, Clayton upland, 49°7.3'N, 122°42'W (courtesy E.C. Halstead).
23. water well drillhole section, Clayton upland, 49°8.8'N, 122°40'W (courtesy E.C. Halstead).
24. diagrammatic cross-section of a raised Capilano delta, lower basin of Capilano River.

(opposite)

Figure 9. *Stratigraphic sections in which Fort Langley glaciomarine deposits occur at or within 10 m of the surface.*

Section 25. gravel pit section on 256th Street, 2.5 km south of Fraser River, 49°8.9'N, 122°30.8'W.
26. roadcut on 272nd Street, 4 km south of Fraser River, 49°7.8'N, 122°28.2'W.
27. Bradner Road hill, 1 km south of Fraser River, 49°09'N, 122°25.5'W.
28. gravel pit on south side of Grant Hill, north of Fraser River, 49°10.5'N, 122°31.7'W.
29. HMCS Aldergrove test hole on 272nd Street, 1.5 km north of Aldergrove, 49°4.3'N, 122°28.2'W (courtesy E.C. Halstead).
30. water well drillhole section on 8th Avenue, 0.2 km east of 200th Street, 49°01'N, 122°39.8'W (courtesy E.C. Halstead).
31. water well drillhole section on 224th Street near 38th Avenue, 49°4.3'N, 122°36.2'W (courtesy E.C. Halstead).
32. water well drillhole section, north end of Satchell Road, 49°8.4'N, 122°24.7'W (courtesy E.C. Halstead).
33. water well drillhole section, junction of McTavish and Satchell roads, 49°8'N, 122°24.7'W (courtesy E.C. Halstead).
34. schematic section representative of Fort Langley sections (no one location).

In sections 29-33 FL1 stony silt and clay loam is difficult to distinguish from FL3 silty clay and clayey silt loam, especially if stones are widely scattered.

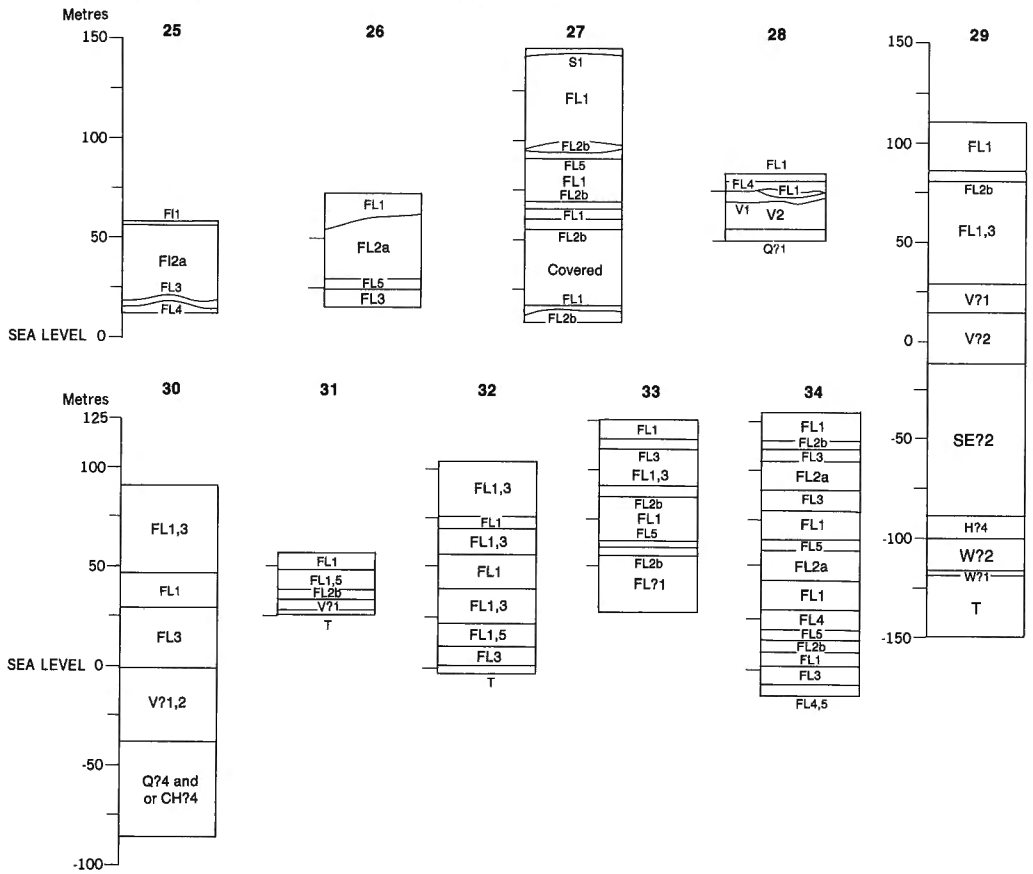

SURFICIAL DEPOSITS

SUMAS DRIFT (S)

- S1 Lodgment till and minor flow till

FORT LANGLEY FORMATION (FL)

- FL1 Glaciomarine stony silt to clay loam
- FL2a Proglacial deltaic gravel and sand
- FL2b Proglacial channel and floodplain gravel and sand
- FL3 Marine fine sand, silt, clayey silt, and silty clay
- FL4 Glaciofluvial ice-contact gravel and sand; lenses and clasts of FL1, FL5
- FL5 Lodgment till and flow till

VASHON DRIFT (V)

- V1 Sandy, loamy lodgment till; a,b,c, youngest to oldest
- V2 Glaciofluvial pebble to boulder gravel and sand; a,b,c, youngest to oldest

QUADRA SAND (Q)

- Q1 Fine to coarse sand; minor silt and gravel
- Q4 Silt, sand, and silty clay, minor gravel; probably of marine origin

COWICHAN HEAD FORMATION (CH)

- CH4 Organic colluvium and peat

SEMIAHMOO DRIFT (SE)

- SE2 Glaciomarine and marine, stony silt loam, clayey silt, and silty clay

HIGHBURY SEDIMENTS (H)

- H4 Marine fine sand, silty sand, silt, clay, and minor gravel

WESTLYNN DRIFT (W)

- W1 Silty loamy lodgment till
- W2 Glaciomarine stony silty clay loam

BEDROCK

TERTIARY BEDROCK (T)

GSC

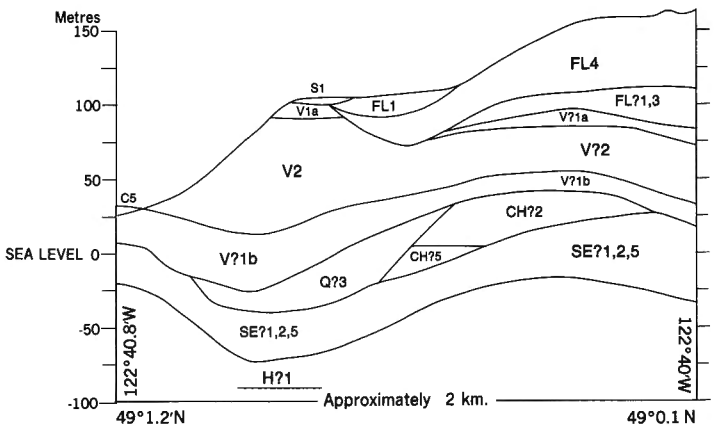

SURFICIAL DEPOSITS

CAPILANO SEDIMENTS (C)

C5 Marine silt loam to clay loam; minor sand and silt; minor glaciomarine sediments (C2)

SUMAS DRIFT (S)

S1 Lodgment till and minor flow till

FORT LANGLEY FORMATION (FL)

FL1 Glaciomarine stony silt to clay loam
FL3 Marine fine sand, silt, clayey silt, and silty clay
FL4 Glaciofluvial ice-contact gravel and sand; lenses and clasts of FL1, FL5

VASHON DRIFT (V)

V2 Glaciofluvial pebble to boulder gravel and sand; a,b,c, youngest to oldest

QUADRA SAND (Q)

Q3 Sandy gravel and gravelly sand

COWICHAN HEAD FORMATION (CH)

CH2 Silt, silty clay, and sand; peat beds in places
CH5 Marine silt, silty clay, and sand; lenses of gravel

SEMIAHMOO DRIFT (SE)

SE1 Loamy lodgment till, minor lenses of sand and gravel; a,b,c, youngest to oldest
SE2 Glaciomarine and marine stony silt loam, clayey silt, and silty clay
SE5 Glaciofluvial gravel and sand; boulder gravel in places

HIGHBURY SEDIMENTS (H)

H1 Silt, silty sand, minor gravel; lenses of gravelly sand

GSC

Figure 10. *Schematic cross-section in an area where Fort Langley ice-contact deposits occur at the surface.*

Figure 11. *Stratigraphic sections in which Sumas Drift is more than 10 m thick at the surface.*

Section 35. gravel pit on east side of Sumas valley, 1.6 km north of International Boundary, 49°1'N, 122°16.5'W.

36. water well drillhole section, about 1.5 km south of Abbotsford, 49°1.2'N, 122°17.2'W (courtesy E.C. Halstead).

37. test hole section about 1.5 km southwest of Clearbrook, 49°2.3'N, 122°20.9'W (courtesy E.C. Halstead). Sumas Drift is only 2 m thick; this is a small knob projecting above Sumas outwash.

38. test hole section, near Bertrand Creek and 12th Avenue, 49°1.4'N, 122°31.3'W (courtesy E.C. Halstead).

39. Test hole section, Campbell upland, on 32nd Avenue, 49°3.6'N, 122°41'W (courtesy E.C. Halstead).

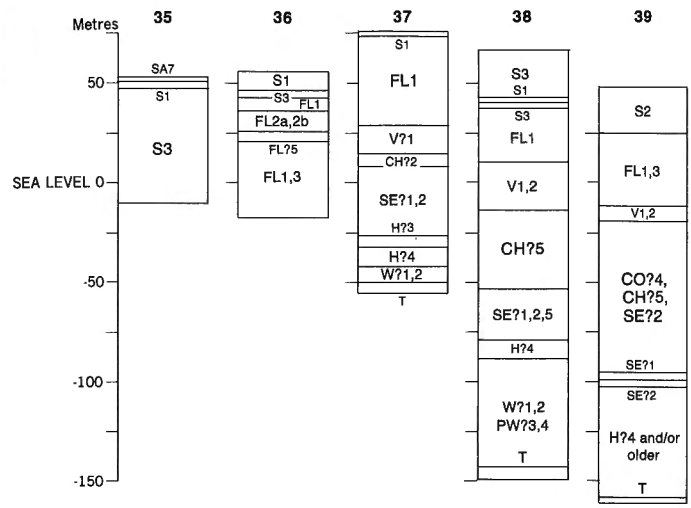

SURFICIAL DEPOSITS

SALISH SEDIMENTS (SA)

SA7 Eolian sand, silt, and silt loam

SUMAS DRIFT (S)

S1 Lodgment till and minor flow till
S2 Proglacial deltaic gravel and sand
S3 Glaciofluvial channel and floodplain gravel and sand

FORT LANGLEY FORMATION (FL)

FL1 Glaciomarine stony silt to clay loam
FL2a Proglacial deltaic gravel and sand
FL2b Proglacial channel and floodplain gravel and sand
FL3 Marine fine sand, silt, clayey silt, and silty clay
FL5 Lodgment till and flow till

VASHON DRIFT (V)

V1 Sandy, loamy lodgment till; a,b,c, youngest to oldest
V2 Glaciofluvial pebble to boulder gravel and sand; a,b,c, youngest to oldest

COQUITLAM DRIFT (CO)

CO4 Marine and glaciomarine stony silt loam and silty clay loam

COWICHAN HEAD FORMATION (CH)

CH2 Silt, silty clay, and sand; peat beds in places
CH5 Marine silt, silty clay, and sand; lenses of gravel

SEMIAHMOO DRIFT (SE)

SE1 Loamy lodgment till, minor lenses of sand and gravel; a,b,c, youngest to oldest
SE2 Glaciomarine and marine stony silt loam, clayey silt, and silty clay
SE5 Glaciofluvial gravel and sand; boulder gravel in places

HIGHBURY SEDIMENTS (H)

H3 Sand and sandy gravel
H4 Marine fine sand, silty sand, silt, clay, and minor gravel

WESTLYNN DRIFT (W)

W1 Silty loamy lodgment till
W2 Glaciomarine stony silty clay loam

PRE-WESTLYNN SEDIMENTS (PW)

PW3 Loamy till
PW4 Glaciomarine stony silty clay loam

BEDROCK

TERTIARY BEDROCK (T)

GSC

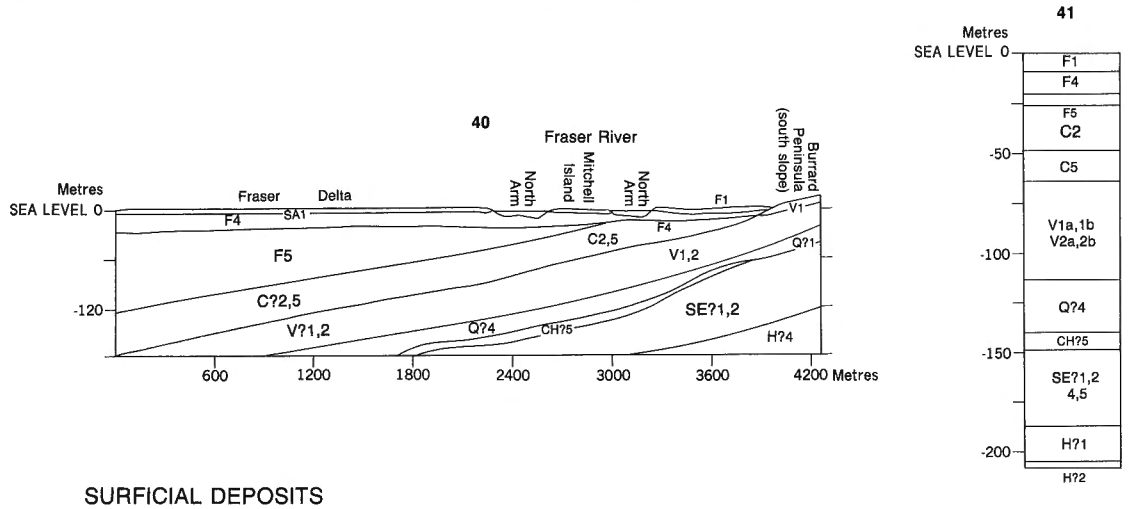

SURFICIAL DEPOSITS

FRASER RIVER SEDIMENTS (F)

- F1 Channel and floodplain silty sand to silty clay loam; minor organic sediments
- F4 Deltaic and channel fine to coarse sand; minor silt, silty loam, and silty clay loam
- F5 Deltaic fine sand to clayey silt; includes estuarine deposits

CAPILANO SEDIMENTS (C)

- C2 Glaciomarine stony silt to clay loam
- C5 Marine silt loam to clay loam; minor sand and silt; minor glaciomarine sediments (C2)

VASHON DRIFT (V)

- V1 Sandy, loamy lodgment till; a,b,c, youngest to oldest
- V2 Glaciofluvial pebble to boulder gravel and sand; a,b,c, youngest to oldest

QUADRA SAND (Q)

- Q1 Fine to coarse sand; minor silt and gravel
- Q4 Silt, sand, and silty clay, minor gravel; probably of marine origin

COWICHAN HEAD FORMATION (CH)

- CH5 Marine silt, silty clay, and sand; lenses of gravel

SEMIAHMOO DRIFT (SE)

- SE1 Loamy lodgment till, minor lenses of sand and gravel; a,b,c, youngest to oldest
- SE2 Glaciomarine and marine, stony silt loam, clayey silt, and silty clay
- SE4 Glaciolacustrine silt, silty clay, and fine sand
- SE5 Glaciofluvial gravel and sand; boulder gravel in places

HIGHBURY SEDIMENTS (H)

- H2 Silty clay, organic silty clay, and peat
- H4 Marine fine sand, silty sand, silt, clay, and minor gravel

GSC

Figure 12. *Stratigraphic cross-section of part of Fraser River Delta.*

Section 40. north-south cross-section at Mitchell Island in North Arm of Fraser River, Knight Road Bridge; 49°11.6'N, 123°5.2'W (centre).
41. Mitchell Island test hole, 49°12.2'N, 123°5.5'W (courtesy W.L. Brown).

An upland area composed largely of Sumas ice-contact sediments extends in an arc about 1.5 km wide from the International Boundary south of Aldergrove to Fraser River (Armstrong, 1980a,b; Armstrong and Hicock, 1980a,b). It has hummocky topography and is dissected by large meltwater channels. A second large area of Sumas ice-contact sediments occurs north of Fraser River east of Deroche. The subsurface geology in these areas of ice-contact sediments shows so much variability due to the nature of the deposits that it is not possible to correlate in detail the lithologic units observed.

Lowlands

Flat-bottomed lowland areas consisting of surficial deposits may be subdivided into three types according to their geomorphic history, namely (1) the delta of Fraser River, (2) the valley of Fraser River, and (3) valleys that were areas of marine sedimentation through much of their Quaternary history.

Fraser River Delta

The delta of Fraser River, which is still growing, stretches from New Westminster west 31 km to the Strait of Georgia and is up to 24 km wide. It probably started forming about 8000 years ago. Postglacial Fraser River Sediments, which make up the delta, are up to 200 m thick and normally consist of the following sedimentary sequence: overbank sandy to clay loam about 2 m thick at the surface, overlying up to 15 m of deltaic and distributary channel fill and floodplain sand and minor silt, which in turn rest on **estuarine** deposits consisting of fine sand to clayey silt up to 185 m thick (Fig. 12, sections 40,41).

Fraser River Valley

The valley in which Fraser River flows is in part a pre-Sumas arm of the sea and in part a late Sumas valley cut by meltwater. In most places the valley is 1 to 5 km wide, except in the vicinity of Sumas and Pitt river valleys where it is up to 10 km wide. The valley floor reaches an elevation of about 15 m at Rosedale, about 100 km from the Strait of Georgia. The deposits laid down by the modern Fraser River during the past 10 000 to 11 000 years consist mainly of gravel and sand east of Sumas Mountain (Fig. 13, section 46) and sand and minor silt west of the mountain (Fig. 13, sections 42-45). These channel and **overbank** deposits are incised up to 40 m into Sumas and older deposits. Low lying gravel terraces 5 to 15 m above the valley floor, west of

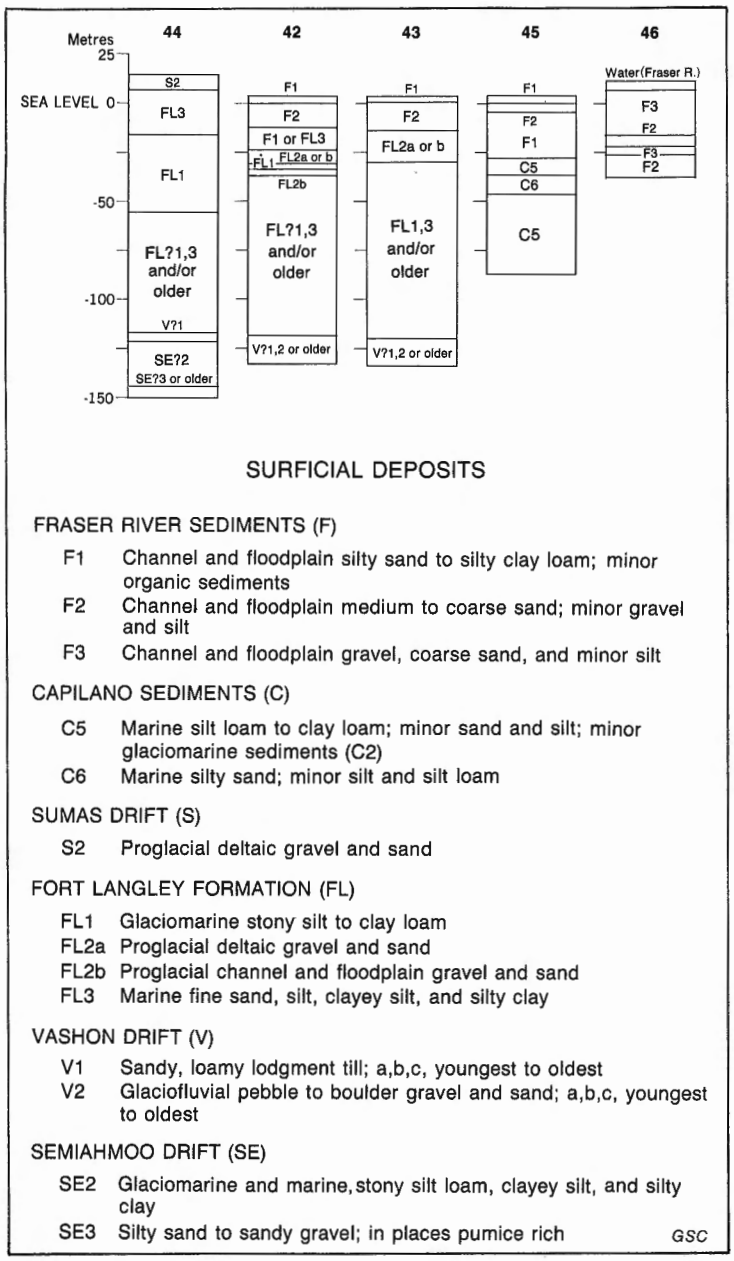

Figure 13. *Stratigraphic sections in Fraser River valley.*

Section 42. water well drillhole section near Fraser River on 88th Avenue near 264th Street, 49°9.7'N, 122°29.4'W (courtesy E.C. Halstead).

43. water well drillhole section near Fraser River on 88th Avenue near 272nd Street, 49°9.7'N, 122°28.4'W (courtesy E.C. Halstead).

44. water well drillhole section about 3.2 km northwest of Fort Langley, 49°11.6'N, 122°36.5'W (courtesy E.C. Halstead).

45. test hole section near Pitt River bridge, 49°14.9'N, 122°43.5'W (courtesy N. Peters).

46. test hole section near Agassiz bridge, 49°12.5'N, 121°46.5'W.

Sumas Mountain, are considered to be recessional Sumas outwash; the modern Fraser has not deposited gravel this far west. Some modern Fraser River **meander** scars are evident, particularly east of Sumas Mountain; however, the steep slopes on the south side of the valley between New Westminster and Matsqui are in part marine-cut seacliffs and in part meltwater meander scars. The subsurface geology in the valley in which the Fraser flows illustrates the complex origin of the valley (Fig. 14).

Areas of Marine Sediments

Three large lowland areas that were subjected to marine sedimentation through much of their Quaternary history are: (1) Nicomekl valley, (2) Sumas valley, and (3) lower Pitt valley. Nicomekl valley, which is more than 30 km long and 5 km wide in places, stretches from Boundary Bay northeast to Fraser River. It was an arm of the sea throughout late Wisconsin and probably earlier Quaternary time. The floor of the valley has a maximum elevation of about 15 m. The valley is underlain by marine silt, clay silt, and fine sand up to 300 m thick; the youngest of these deposits contained fossil shells at 15 m elevation that were dated 11 930 ± 190 BP (GSC-168). The subsurface geology is illustrated in sections 52-54 of Figure 15.

Sumas valley, which lies between Sumas Mountain and Mount Vedder, stretches from near Chilliwack where it merges with Fraser River valley southwest 30 km to the International Boundary. It averages about 5 km in width and the maximum elevation of its floor is about 15 m. This valley was originally formed as a **graben** probably in late Tertiary time. During much of the Quaternary, particularly throughout Wisconsin time, it was an arm of the sea. In **Holocene** time it was occupied by a shallow lake – drained in 1926 – formed behind a **fan delta** laid down by Chilliwack River. The postglacial Sumas Lake deposits are normally less than 5 m thick and consist of fine sand, silt, and clay. They overlie up to 300 m or more of silt, clayey silt, and fine sand – in large part, marine deposits laid down prior to the Sumas Stade. The age of these deposits is unknown; they probably consist of Fort Langley and older formations (Fig. 15, section 55).

Lower Pitt River valley, which is 8 km wide, is underlain by floodplain and overbank deposits of Pitt and Fraser rivers. These may be up to 15 m thick and they overlie up to 300 m of marine silt, sand, and clay of Capilano and pre-Capilano age. This valley, together with Pitt Lake, represents a fiord.

Mountain Slopes With Surficial Deposits More Than 10 m Thick

Mountain slopes where surficial deposits are more than 10 m thick include slopes of the Coast and Cascade mountains adjoining the Fraser Lowland and the intermontane valleys dissecting these slopes. The more important of these intermontane valleys are those of Capilano, Seymour, Coquitlam, Alouette, Stave, Chehalis, and Chilliwack rivers; Lynn and Norrish creeks; and Hatzic and Cultus valleys. On the slopes below elevations of 250 m, the bedrock in many places underlies more than 50 m of unconsolidated sediments. Unconsolidated sediments up to 200 m thick occur on some intermontane valley sides, for example, the west side of Coquitlam River valley (Fig. 16, sections 57-60). These mountain slope areas, in which thick Quaternary deposits overlie bedrock, exhibit the same complex subsurface geology as that found in the adjoining part of the Fraser Lowland. A cross-section at the Capilano dam is shown in Figure 16 (section 56).

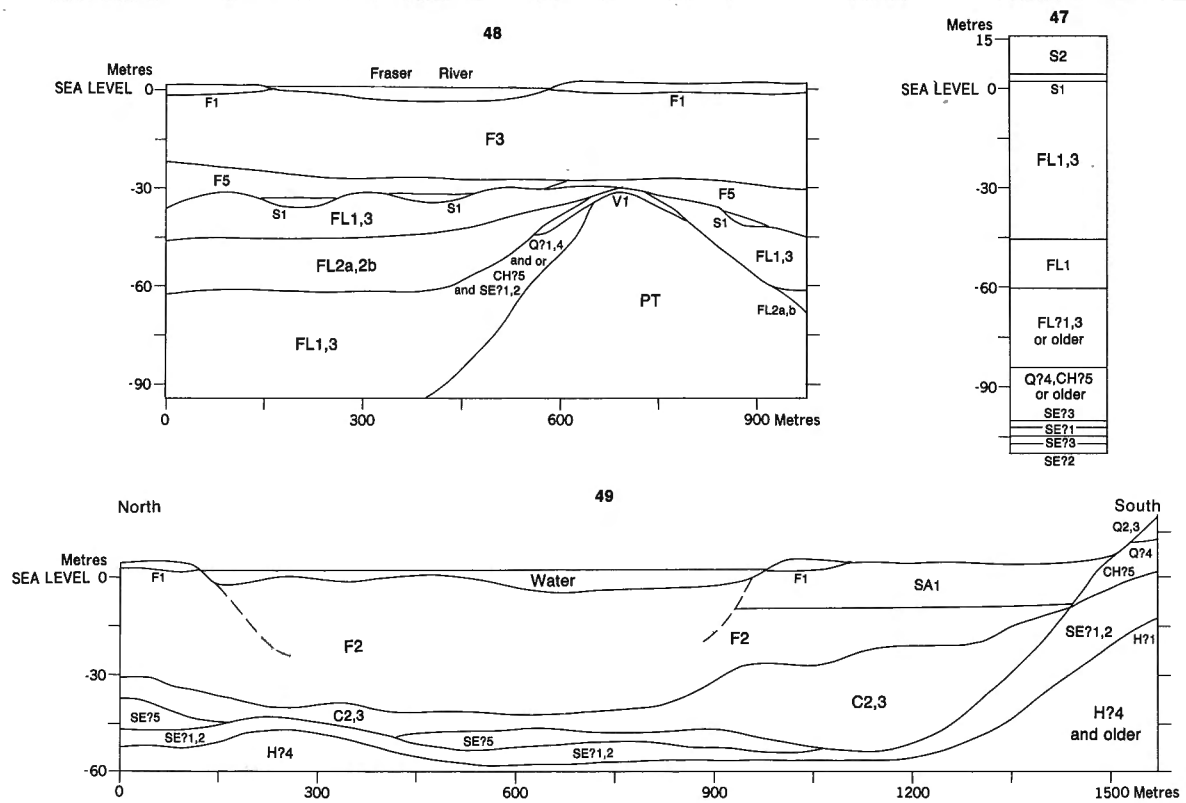

SURFICIAL DEPOSITS

SALISH SEDIMENTS (SA)

- SA1 Peat, organic silt loam, and silty clay loam

FRASER RIVER SEDIMENTS (F)

- F1 Channel and floodplain silty sand to silty clay loam; minor organic sediments
- F2 Channel and floodplain medium to coarse sand; minor gravel and silt
- F3 Channel and floodplain gravel, coarse sand, and minor silt
- F5 Deltaic fine sand to clayey silt; includes estuarine deposits

CAPILANO SEDIMENTS (C)

- C2 Glaciomarine stony silt to clay loam
- C3 Intertidal sand

SUMAS DRIFT (S)

- S1 Lodgment till and minor flow till
- S2 Proglacial deltaic gravel and sand

FORT LANGLEY FORMATION (FL)

- FL1 Glaciomarine stony silt to clay loam
- FL2a Proglacial deltaic gravel and sand
- FL2b Proglacial channel and floodplain gravel and sand
- FL3 Marine fine sand, silt, clayey silt, and silty clay

VASHON DRIFT (V)

- V1 Sandy, loamy lodgment till; a,b,c, youngest to oldest

QUADRA SAND (Q)

- Q1 Fine to coarse sand; minor silt and gravel
- Q2 Interbedded silt, fine sand, and minor peat
- Q3 Sandy gravel and gravelly sand
- Q4 Silt, sand, and silty clay, minor gravel; probably of marine origin

COWICHAN HEAD FORMATION (CH)

- CH5 Marine silt, silty clay, and sand; lenses of gravel

SEMIAHMOO DRIFT (SE)

- SE1 Loamy lodgment till, minor lenses of sand and gravel; a,b,c, youngest to oldest
- SE2 Glaciomarine and marine, stony silt loam, clayey silt, and silty clay
- SE3 Silty sand to sandy gravel; in places pumice rich
- SE5 Glaciofluvial gravel and sand; boulder gravel in places

HIGHBURY SEDIMENTS (H)

- H1 Silt, silty sand, minor gravel; lenses of gravelly sand
- H4 Marine fine sand, silty sand, silt, clay, and minor gravel

BEDROCK

PRE-TERTIARY BEDROCK (PT)

GSC

Figure 14. *Stratigraphic cross-sections and section in Fraser River valley.*

Section 47. water well drillhole section near Fraser River on 84th Avenue, 49°9.3'N, 122°31.2'W (courtesy E.C. Halstead).
48. schematic cross-section of Fraser River valley at Mission City.
49. diagrammatic cross-section of valley of Fraser River at Port Mann.

Bedrock Within 10 m of the Surface

Bedrock areas include (1) Coast and Cascade mountains where bedrock is at or within 10 m of the surface; (2) isolated bedrock hills and mountains within the Fraser Lowland (includes Little Mountain, Mount Burnaby, Capitol Hill, Grant Hill, Sumas Mountain, and Chilliwack Mountain); and (3) low lying areas in which Tertiary bedrock is at or near the surface (includes Burrard Inlet, False Creek, Kitsilano Beach, Brunette River, and Kanaka Creek). The presence of bedrock at or near the surface presents a different set of problems with regards to land use, most of which are obvious and will be discussed in other sections of this report.

Quaternary History

The major physiographic elements of the region probably existed more or less in their present form before the Quaternary events recorded in this report. These include the Coast Mountains, Cascade Mountains, and Georgia Depression which is now occupied by the Strait of Georgia. The pre-Quaternary area occupied by the Fraser Lowland was an area of fresh water for tens of millions of years as is evidenced by the fact that the Tertiary (up to 65 million years old) sedimentary rocks that underlie the surficial deposits contain no marine fossils but only plant fossils. Much of the Georgia Depression area was also an environment in which freshwater sediments were deposited.

SURFICIAL DEPOSITS

SALISH SEDIMENTS (SA)

- SA4 Lacustrine silt to clay loam
- SA5 Lacustrine sand to sandy loam

FRASER RIVER SEDIMENTS (F)

- F1 Channel and floodplain silty sand to silty clay loam; minor organic sediments
- F2 Channel and floodplain medium to coarse sand; minor gravel and silt
- F5 Deltaic fine sand to clayey silt; includes estuarine deposits

CAPILANO SEDIMENTS (C)

- C2 Glaciomarine stony silt to clay loam
- C3 Intertidal sand
- C4 Proglacial deltaic gravel and sand
- C5 Marine silt loam to clay loam; minor sand and silt; minor glaciomarine sediments (C2)
- C6 Marine silty sand; minor silt and silt loam

FORT LANGLEY FORMATION (FL)

- FL1 Glaciomarine stony silt to clay loam
- FL3 Marine fine sand, silt, clayey silt, and silty clay

VASHON DRIFT (V)

- V2 Glaciofluvial pebble to boulder gravel and sand; a,b,c, youngest to oldest

QUADRA SAND (Q)

- Q4 Silt, sand, and silty clay, minor gravel; probably of marine origin

SEMIAHMOO DRIFT (SE)

- SE1 Loamy lodgment till, minor lenses of sand and gravel; a,b,c, youngest to oldest
- SE2 Glaciomarine and marine, stony silt loam, clayey silt, and silty clay
- SE3 Silty sand to sandy gravel; in places pumice rich

HIGHBURY SEDIMENTS (H)

- H4 Marine fine sand, silty sand, silt, clay, and minor gravel

WESTLYNN DRIFT (W)

- W2 Glaciomarine stony silty clay loam

PRE-WESTLYNN SEDIMENTS (PW)

- PW1 Sand and gravel; 1a, glaciofluvial?; 1b, marine?
- PW2 Probably marine silt, clay, and minor sand
- PW3 Loamy till
- PW4 Glaciomarine stony silty clay loam

BEDROCK

TERTIARY BEDROCK (T)

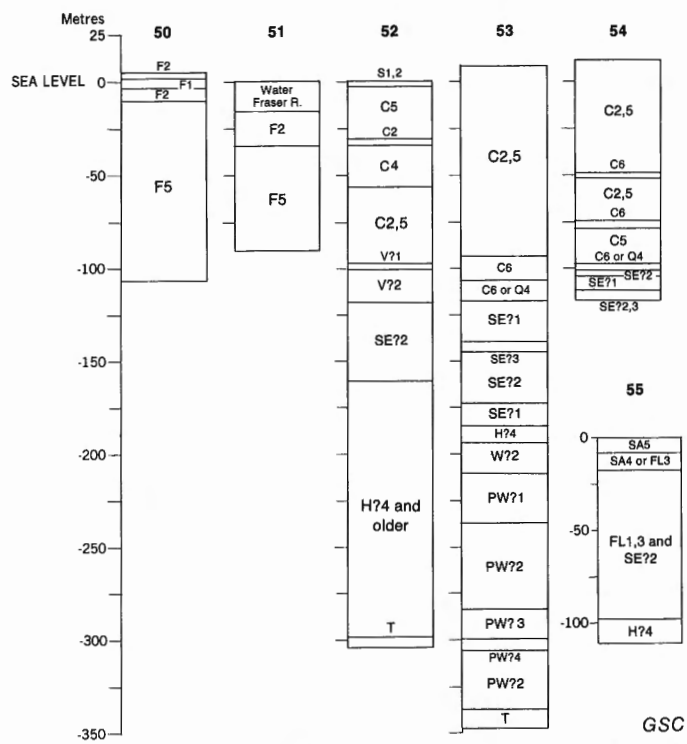

Figure 15. *Stratigraphic sections in Fraser River Delta – Nicomekl and Sumas valleys.*

Section 50. drillhole section on Iona Island, 49°13.1'N, 123°12'W.
51. drillhole section on Fraser River near Deas Island tunnel, 49°7.4'N, 123°4.5'W.
52. test hole section on 48th Avenue, Nicomekl valley, 49°5.4'N, 122°43.5'W (courtesy E.C. Halstead).
53. water well drillhole, Langley City, 49°6.3'N, 122°39.5'W (courtesy E.C. Halstead).
54. water well drillhole near Milner, 49°7.4'N, 122°37.2'W (courtesy E.C. Halstead).
55. water well drillhole at Sumas airstrip, 49°3.2'N, 122°8.5'W (courtesy E.C. Halstead).

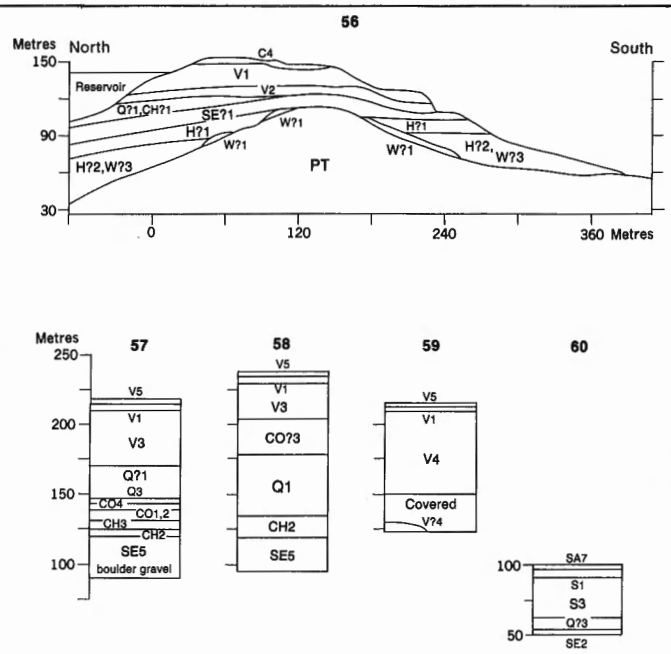

SURFICIAL DEPOSITS

CAPILANO SEDIMENTS (C)

C4 Proglacial deltaic gravel and sand

SUMAS DRIFT (S)

S1 Lodgment till and minor flow till
S3 Glaciofluvial channel and floodplain gravel and sand

VASHON DRIFT (V)

V1 Sandy, loamy lodgment till; a,b,c, youngest to oldest
V2 Glaciofluvial pebble to boulder gravel and sand; a,b,c, youngest to oldest
V3 Glaciofluvial ice-contact gravel and sand
V4 Glaciolacustrine silt, fine sand, and silty clay
V5 Ablation till and post-Vashon colluvium

COQUITLAM DRIFT (CO)

CO1 Sandy loam lodgment till
CO2 Glaciofluvial gravel and sand
CO3 Ice-contact gravel and sand
CO4 Marine and glaciomarine stony silt loam and silty clay loam

QUADRA SAND (Q)

Q1 Fine to coarse sand; minor silt and gravel
Q3 Sandy gravel and gravelly sand

COWICHAN HEAD FORMATION (CH)

CH1 Sand and silty sand
CH2 Silt, silty clay, and sand; peat beds in places
CH3 Sandy gravel and gravelly sand

SEMIAHMOO DRIFT (SE)

SE1 Loamy lodgment till, minor lenses of sand and gravel; a,b,c, youngest to oldest
SE2 Glaciomarine and marine, stony silt loam, clayey silt, and silty clay
SE5 Glaciofluvial gravel and sand; boulder gravel in places

HIGHBURY SEDIMENTS (H)

H1 Silt, silty sand, minor gravel; lenses of gravelly sand
H2 Silty clay, organic silty clay, and peat

WESTLYNN DRIFT (W)

W1 Silty loamy lodgment till
W3 Glaciofluvial gravel and sand

BEDROCK

PRE-TERTIARY BEDROCK (PT)

GSC

Figure 16. *Stratigraphic cross-section and section in Coast Mountain valleys.*

Section 56. cross-section at Capilano Dam, North Vancouver District (courtesy V. Dolmage, Dolmage, Mason, and Stewart Ltd.).
57. diagrammatic stratigraphic section, sand and gravel pit, west side of Coquitlam River, 49°18.6'N, 122°46.7'W.
58. diagrammatic stratigraphic section, Cewe gravel pit, west side of Coquitlam River, 49°19.3'N, 122°46.7'W.
59. diagrammatic stratigraphic section, slide area, west side of Coquitlam River, 49°20'N, 122°46.7'W.
60. stratigraphic section on southeast side of Fraser River valley in Bailey sanitary landfill pit, 49°6.5'N, 121°55.3'W.

When the sea entered the Georgia Depression and the Fraser Lowland is unknown but it must have been early in the Quaternary. Westlynn Drift lying on Tertiary bedrock in the Highbury Tunnel consists in part of glaciomarine sediments containing abundant shells (Armstrong and Hicock, 1980b). At that time the Fraser Lowland consisted of a shallow arm of the sea containing scattered islands such as Mount Burnaby and Sumas Mountain. The sea lapped onto the lower slopes of the Coast and Cascade Mountains.

During the three or more **glaciations** – Westlynn, Semiahmoo, and Fraser – and the intervening nonglacial intervals – pre-Westlynn, Highbury, and Olympia (Table 3) – the areas between the islands were filled and modified and the present-day topography of the Fraser Lowland was developed. The modern topography bears no direct relationship to the underlying bedrock except for the preservation of some of the bedrock islands. A good example of this nonrelationship may be found in the Cloverdale area, where bedrock within the village centre (elevation 10-15 m) is about 55 m below sea level whereas bedrock underlying the hill 2 km to the east of Cloverdale (elevation 40-60 m) is 250 m below sea level.

When attempting to unravel the Quaternary history of the Fraser Lowland several major controlling factors must be evaluated: (1) The area is surrounded by high mountain ranges on two sides and the sea on the third side. (2) During part of Quaternary time the lowland was covered by the sea. (3) The major glaciers probably terminated in the sea during their advance. For example Semiahmoo glaciomarine deposits intersected in the Highbury Tunnel are found below Semiahmoo till (Armstrong and Hicock, 1980b). Also near the junction of the King Georgia Highway and Highway 10 silty sand containing abundant fossil shells was found below Vashon till (Armstrong and Hicock, 1980a). At their maximum advance the major glaciers probably filled the Strait of Georgia, crossed Vancouver Island, and entered the Pacific Ocean (Fyles, 1963). (4) Mean annual air temperatures during the advance and retreat of the major glaciers were probably only a few degrees, at the most 5°C, cooler than at present. Variation in precipitation, especially snow, may have played a much larger role in the Quaternary history than did temperature changes. (5) The area was **tectonically** active throughout Quaternary time, including **volcanism** in the nearby Cascade and Coast mountains. (6) Prior to **Wisconsin** Glaciation, rivers flowed into the area, predominantly from the Coast and Cascade mountains, and were probably similar to present-day Capilano and Chilliwack rivers. Although a pre-Wisconsin Fraser River has been suggested, evidence of such is missing. During Wisconsin and probably during earlier Quaternary glaciations the Lowland was subjected to repeated glacier ice advances separated by nonglacial intervals. Although most deposits of the Semiahmoo and Westlynn glaciations are encountered only in drillholes, the similarity of their deposits to those of the Fraser Glaciation enables the following conclusions to be drawn regarding all the major glaciations.

Each major glaciation was made up of three main stages in the Lowland and one advance in the adjoining Coast and Cascade mountains. At the beginning of each major glaciation, alpine glaciers advanced down the valleys. This was followed in the Lowland by (1) a piedmont glacier stage characterized by coalescing valley glaciers moving out of the mountains; (2) a maximum stage when the ice attained a thickness of 1800 m or more and overrode much of the adjoining mountain areas; and (3) a retreat or deglaciation stage when the ice mainly occupied the valleys and arms of the sea and underwent local readvances (Fort Langley, Sumas), possibly as surging glaciers. Each major glaciation was accompanied by **isostatic** and **eustatic** adjustments that may have been further complicated by **tectonic** adjustments. The relative sea level changes that accompanied the isostatic and eustatic adjustments at times exceeded 200 m (see below).

The glaciers that moved into the Fraser Lowland during Quaternary time initially moved over bedrock or the seafloor and later moved over landscapes that had previously been modified by fluvial processes. The extent to which the glaciers themselves modified these earlier landscapes varied, depending on, for example: (1) the nature of the preglacial relief, (2) the thickness of the glaciers, and (3) temperatures at the base of the glaciers. The glaciers flowing down the mountain valleys had considerable erosive power, creating fiords and U-shaped valleys. In places in the Fraser Lowland, however, the erosive power of the glaciers was limited. In the case of the Vashon glacier, and probably the Semiahmoo and Westlynn glaciers, the basal (lodgment) tills are to a large extent blanketed on the pre-existing landscapes. Meltwaters, which flowed from the glaciers during the advance and retreat stages of glaciation, modified the pre-existing landscapes to a much greater extent than the glaciers themselves. Some of the meltwater rivers had great erosive power, cutting deep channels into older landscapes; for example, it is evident that during the last major glaciation (Fraser) rivers flowing from the advancing ice in places removed one or more older lithostratigraphic units. Large meltwater channels, resulting from the local Sumas glacier, are common between Abbotsford and Langley.

The nonglacial Cowichan Head Formation and Highbury Sediments are river channel and floodplain sediments where they were deposited in valleys and are marine, estuarine, and **lagoonal sediments** where they were deposited in the sea. They have a more limited areal distribution than the drift deposits. During both nonglacial intervals the pre-existing landscapes were remodelled, possibly more than once as is evidenced by old landscape surfaces exposed in the Cowichan Head sediments at Mary Hill.

The constantly changing sea levels throughout Quaternary time greatly modified the present and older landscapes. These changes resulted from three main controlling factors: (1) The isostatic depression and rebound of the land during each glaciation was brought about by the build-up of glacier ice and removal of this ice. As already stated, at the maximum of each major glaciation the ice was up to 1800 m thick and the resulting weight of the ice depressed the land as much as 300 m. (2) The world-wide eustatic lowering of sea level was at least 100 m during each major glaciation; this was brought about by the removal of water from the oceans by precipitation in the form of snowfall that was converted to ice to form continental glaciers. (3) Tectonic changes resulted in the raising or lowering of the land surface in relation to the oceans; these tectonic adjustments may be brought about by a variety of factors, the most important of which are related to **seafloor spreading.**

As a result of this complex Quaternary history, thick sediments – at least 300 m in places – of widely diversified origin were deposited. The environments of deposition and the lithology of the deposits are summarized in Table 4.

APPLICATIONS OF QUATERNARY GEOLOGY

Many of man's activities involve the use of geological materials that constitute the surface and the underlying subsurface. These activities include construction of buildings, roads, railways, bridges, and airports; drainage and

sewage systems; water supply systems; mining of construction materials; farming and forestry. The role of geology in all these activities is enlarged upon in later sections of this report. An attempt is made to show with examples how the geological information may be used and to indicate the **geological hazards** that should be considered.

Engineering Applications

Foundation Materials

The term foundation as used here refers to the lower, man-made, supporting part of an engineering structure, in direct or indirect contact with the underlying geological materials. The foundation transmits the weight of the structure and its included load to these underlying materials which in this report are called **foundation materials.** Where the foundation material is bedrock in the Fraser Lowland, no major foundation problems are encountered, except for higher excavation costs; discussion will be limited to unconsolidated foundation materials. Normally the **pedological (agricultural) soil**[1] is removed and the structure erected on the graded underlying foundation material (soil in the engineering sense)[1] on excavated surfaces, and on fill placed on this material. The fill is, in the majority of cases, foundation material – processed or unprocessed – that is brought to the structure site. Only the foundation materials found at the original sources are discussed here.

The discipline of **soil mechanics** is the systematic study of the physical properties and utilization of foundation materials. The engineer specializing in soil mechanics undertakes a variety of tests to determine in detail the physical properties of the foundation materials, including particle size distribution, composition of the particles, content of plant matter, porosity, density, water content, and in the case of fine sediments the **plastic** and **liquid (Atterberg) limits** of the unconsolidated materials. Also determined is the degree of natural consolidation and the amount of compaction needed. The terms consolidation and compaction as used by soils engineers refer to reduction in volume and increase in density of foundation materials in response to increased load or compressive stresses – for example, the adjustment of a saturated material involving the squeezing of water from pore spaces. Normally engineers use the term consolidation to refer to all natural and mechanical changes, and compaction to refer to mechanical changes only. To the geologist consolidation means any process whereby loosely aggregated, soft, or liquid earth materials become firm and coherent rock. The term unconsolidated sediments is used in this report with the geological meaning and includes all the soils of the engineer. Upon completion of his tests, the soils engineer determines the **bearing capacities** of the foundation materials.

Foundation materials are discussed here from the viewpoint of a geologist and the general conclusions are not meant to replace detailed site investigations of the engineer; however, it is hoped these conclusions will be useful to all those concerned with foundation materials. Table 6 classifies all the materials likely to be encountered in the foundations of structures under the headings: type of deposit, bearing capacity, workability, and drainage. The types of deposits are those listed in Table 4, which includes all the lithologic units of the Fraser Lowland classified according to particle size, origin, and environment of deposition.

The bearing capacities shown in Table 6 (which have not been quantified) are based on 1) the composition and origin of the materials and 2) information obtained from engineers and the history of settling below structures. The oldest deposit likely to be encountered in foundations is Quadra Sand and consequently only Quadra and younger deposits are shown; however pre-Quadra sediments have been encountered in foundation excavations in a few places in the past. Cowichan Head, Semiahmoo, Highbury, and Westlynn deposits were all involved in the foundation for the Upper Level highway between Lynn Creek and Lonsdale Avenue, North Vancouver. In some of the uplands in which Vashon Drift is at or near the land surface, Cowichan Head and Semiahmoo sediments occur within 10 m of the surface (see section on *Subsurface Geology*). Also, in some of the seacliffs and mountain river valleys pre-Quadra sediments are exposed and in the case of the Capilano and Seymour dams, form part of their foundations. All these pre-Quadra deposits have been compressed by thick deposits of younger sediments and by great thicknesses of glacial ice; consequently, the bearing capacities are good to excellent. The most serious problem likely to arise in these older sediments is that of groundwater drainage, especially if aquifers are encountered.

Ideally in areas of unconsolidated sediments the nature of the subsurface sediments should be determined to at least a depth of twice the width of the foundation. When using Table 6, one should always bear in mind that the material exposed at the surface may, in many cases, be thin and completely excavated in preparing a structure's foundation; consequently the underlying materials become the foundation materials.

Drainage of the foundation materials refers to natural drainage without the use of man-made drainage systems. The composition of the Quaternary deposits decides the method of drainage. The **permeability** of the sediments forming the land surface is normally the controlling factor in determining whether the excess water is removed by surface or subsurface drainage. Impervious sediments and those with very limited permeability are subject to surface drainage, whereas pervious and partly pervious sediments are subject entirely or partly to subsurface drainage. This is certainly true for all the upland areas underlain by pervious sediments. In places in the lowland areas where pervious sand occurs at the surface, the **groundwater table** during most of the year is too near the land surface to permit downward movement of water.

Table 4 of lithologic units and their environments of deposition lists the Quaternary sediments found at or below the surface in the Fraser Lowland. Except in a few small areas, mainly seacliffs, river and stream valleys, gullies, and gravel pits, Vashon Drift and younger deposits occur at the surface. For all practical purposes most of the tills, glaciomarine sediments and glaciolacustrine sediments are impervious. Also impervious or nearly so are post-Vashon offshore marine, fluvial and lacustrine silts, silty clays, and clayey silts. Most of the remaining Vashon and younger sediments are pervious or partly pervious. Some of the

---

[1] The term soil as used in the scientific and technical literature has different meanings when used by different people. Engineers and many geologists use the word soil to include all unconsolidated materials in the earth's crust overlying bedrock, with the possible exclusion of the thin layer of pedological soil which is of such importance to agriculture and forestry. The agriculturists refer to this pedological soil only as soil, and to the underlying material as **parent material.** In this report the term **pedological** or **agricultural soil** is used for the agriculturist's soil and the term **unconsolidated materials** is used for the engineer's soil. Although most soils engineers, argicultural soil scientists (pedologists), and geologists are familiar with the two conflicting uses of the term soil, many others who may have occasion to use their reports or this report may be unfamiliar with the two terminologies, and as a result unnecessary and at times costly mistakes are made, especially in the fields of landscape architecture and gardening.

Table 6. Foundation Properties and Drainage

Type of Deposit (cf. Table 4)	Bearing Capacity	Workability	Drainage
Vashon lodgment till	Excellent	Fair, may need to be dynamited especially if large boulders are present	Mainly good surface drainage, also limited groundwater drainage
Sumas and Fort Langley lodgment tills	Good to excellent excellent	Good	Mainly surface drainage, also limited groundwater drainage
Quadra, Vashon, Fort Langley, Sumas, and Capilano glaciofluvial gravel and sand	Good to excellent	Excellent	Excellent groundwater drainage
Sumas glaciolacustrine silt, clayey silt, silty clay, and sand, rhythmically bedded	Poor to fair	Good	Surface drainage
Fort Langley and Capilano glaciomarine stony silt, silt loam, and silty loam	Poor to fair where not preloaded by younger sediments or ice; fair to good where they have been preloaded	Good except high moisture content may give trouble. In a few places large boulders may present problems	Surface drainage, may be poor because most have rolling surfaces without good natural surface drainage system. Very poor groundwater drainage
Fort Langley and Capilano offshore marine interbedded silt, clayey silt, and fine sand	Poor to fair where not preloaded by younger sediments or ice; fair to good where they have been preloaded	Good except high moisture content may give trouble	Surface drainage, may be poor for same reason that applies to the glaciomarine deposits in low lying areas; where water table is at or near surface the surface drainage is very poor
Capilano and Salish shore marine gravel and sand	Good, however deposit is usually too thin to play important role	Good	Good groundwater drainage except where water table is at or near surface
Salish and Fraser River fluvial sand and gravel	Fair to good depending on density	Good, except sides of excavations subject to slumping	Groundwater drainage; however most of the year water table near surface and surface drainage will be necessary
Salish and Fraser River fluvial interbedded silt, silty clay, sandy, silty and clayey loam, and loam	Poor	Good except high moisture content probably will give trouble	Surface drainage. Fraser River deposits all occur in flat, low-lying areas with water table at or near surface
Salish lacustrine and eolian sand	Fair, normally density is low	Good	Groundwater drainage good in eolian sand; in Salish lacustrine sand water table may be at surface

Table 6 (cont.)

Type of Deposit (cf. Table 4)	Bearing Capacity	Workability	Drainage
Salish lacustrine interbedded silty sand, clayey silt, and silt clay	Poor	Good except high moisture content probably will give trouble	Surface drainage, these deposits all occur in flat lying areas with water table at or near surface
Salish colluvium	Variable from poor to good		Groundwater and surface drainage
Salish organic sediments	Very poor	Good	Water is mainly absorbed by the organic sediments
Landfill	Many problems depending on material used		

pre-Vashon deposits which normally would be considered pervious have been made nearly impervious as a result of preloading of these older sediments; for example, boulder gravel of probable Semiahmoo Drift found in Coquitlam valley is impervious. Table 6 lists the drainage properties and foundation information of the Quaternary deposits. In order to use the information shown in Table 6, the reader should refer to the surficial geology maps (Armstrong, 1980a,b; Armstrong and Hicock, 1980a,b) to find out which lithostratigraphic unit occurs at or within one metre of the surface and then find the corresponding unit in Table 6; for example, if on the surficial map, Fort Langley glaciomarine stony clayey silt occurs at the surface, look for the same unit in Table 6.

Where natural surface or subsurface drainage is unsatisfactory, man-made drainage systems are needed to make the land usable. This is especially true in flat-lying areas of nearly impervious materials. Such areas occur throughout most of the Fraser River floodplain and delta, in the Nicomekl-Serpentine lowland, and in Sumas valley (see *Floods*).

Also in many areas underlain by pervious material where the groundwater (subsurface) drainage is good, the depth of the excavation may penetrate the groundwater table. In this case artificial drainage is needed to permit construction under dry conditions and to maintain stability of the sides of the excavation. Also, on completion of the structure, it is necessary to maintain the lowered water level below the normal water table by means of permanent drains.

Foundation Problems

A few examples of special geological conditions that are known to exist in the Fraser Lowland and that may require special treatment in planning foundations are discussed below.

Most of the downtown area of the city of Vancouver (False Creek to Burrard Inlet) and much of the north slope of Burrard peninsula have Tertiary sedimentary rocks at or within 10 m of the land surface. These are excellent foundation materials for heavy, large structures. This bedrock, however, is traversed by depressions that have been filled with marine and glaciomarine sediments which are relatively unsatisfactory foundation materials (see discussion below on these materials). The scale of mapping and the lack of information has made it impossible to delineate all these depressions on the surficial geology maps. One large depression is known to stretch from English Bay to Burrard Inlet, but the largest known depression is that occupied by False and Still creeks (Armstrong and Hicock, 1980b). In this latter depression drillholes for the Granville Street bridge intersected thick deposits (more than 20 m) of marine and glaciomarine sediments above Tertiary bedrock and Vashon Drift. Blunden (1971) provided more detailed information on foundation conditions in downtown Vancouver.

Landfill up to 15 m thick has been used to produce a large area of reclaimed land in the False Creek area (Lim, 1974). Also most of the small drainage valleys on the north slope of Burrard peninsula have disappeared below fill. Landfill and sanitary landfill are widely disseminated throughout the Fraser Lowland. One of the largest areas of sanitary landfill occurs in the southeast corner of Vancouver. Both these types of fill may consist of a great variety of materials ranging from geological materials excavated from elsewhere to man-made waste such as blocks of concrete and asphalt, pieces of wood and metal, solid garbage (bottles, cans, household utensils, and appliances) and sawdust. Special care is obviously needed in these areas of fill. The original land surface and its geological composition should be outlined.

Glaciomarine and marine sediments of post-Vashon age are widespread throughout the Fraser Lowland. They are composed of mixtures of clay and silt with minor amounts of fine sand; glaciomarine sediments also contain minor amounts of ice-rafted debris up to boulder size. Studies in the St. Lawrence River valley and in Scandinavia on materials of similar origin show that where they have not been naturally preloaded, they are distinguished by their sensitivity (**sensitive clay**), that is, loss of strength on remolding. They also have relatively high **void ratios** (Easterbrook, 1964), and under heavy loads the void water is squeezed out resulting in settlement of up to 1 m or more. The settlement is usually very uneven. Under light loads settlement will occur due to shrinkage by drying (**desiccation**). These materials all present major drainage problems. Where they occur on steep slopes they may slide at very low angles (see section on landslides in this chapter).

In the Fraser Lowland the Capilano glaciomarine and marine sediments have not been naturally preloaded, except where overlain by thick deposits of Holocene age, and as a

result are subject to many settlement problems. Fortunately, except in a few areas such as False Creek and the upland between Langley and Cloverdale, they are less than 10 m thick and can be removed by excavation for foundations of large structures. The Fort Langley glaciomarine and marine sediments have been compressed by the Sumas glacier and its deposits. In the area west of Aldergrove the extent of Sumas ice cover has not been fully determined and little information is available on the amount of compression that has taken place. Farther east, near the Abbotsford airport, the glaciomarine deposits that are exposed below the agricultural soil have undergone some preconsolidation; this may be accounted for by 65 m of ice, if the ice rested directly on the land surface and was not separated by a thin layer of meltwater (B.C. Department of Highways, personal communication, 1965). The extent of this compaction elsewhere has not been ascertained. Much of the Trans Canada Highway between Abbotsford and Surrey upland rests on glaciomarine deposits. During the planning and construction of this roadway an attempt was made to use the desiccated layer of the glaciomarine and marine deposits wherever possible. The desiccation, which extends down to 3 m, results from the relatively dry summers and has reduced the void ratio and allowed some natural settlement (B.C. Department of Highways, personal communication, 1965).

The Fraser River and lowland Salish sediments that consist of silt, clay, and minor sand present major foundation and drainage problems. Most of the year they are saturated from the agricultural soil down due to an extremely high water table. Under heavy loads they are subject to fairly large (up to 2 m) and uneven settlements. This may be remedied by preloading with fill as has been done at many sites bordering Fraser River between Port Mann and the Strait of Georgia; much of the fill used is sand pumped from the channels of Fraser River. In a large part of the Fraser delta the silt and finer sediments at the surface do not exceed 5 m in thickness and are underlain by 15 m or more of fluvial sand (Armstrong and Hicock, 1980a,b). Many of the large structures in the delta are built on **pile foundations** which are anchored in this underlying sand. Excavated basements are not recommended in these fine sediments as they would be below the groundwater table.

At places in the Fraser delta, especially near the sea, deposits of clay and silt, less than 2 m thick, lie above sea level and are underlain by permeable sand open to the sea. During the dry season in particular the water level in these sands changes with the tides. Foundations are affected by this phenomenon at the former Boundary Bay military airport.

Large areas of organic sediments, particularly the peat bogs in the Fraser Lowland, present major foundation problems for highways and other structures, including light structures such as homes. **Peat** will hold up to 26 times its own weight of water and will undergo major uneven settlement when loaded. The history of highway construction across peat bogs in the Fraser Lowland illustrates the tremendous improvement in techniques in handling organic terrain. Prior to the Second World War the normal procedure was to place relatively thin landfill on the bog and to build the road before most of the settlement took place. Consequently, in a few years the road developed a roller coaster type of surface, for example, Highway 99A east of New Westminster. This was followed by an attempt to drain the bogs with ditches, building culverts on piles over the ditches, and proceeding as described above. The result in a few years was to have the culverts project above the road which had settled between the culverts; a good example was on Highway 7 between New Westminster and Port Mann bridge. The next major approach was to remove the peat and fill the excavation with sand landfill as was done reasonably successfully on Highway 99 where it transects a major peat bog on Lulu Island. The procedure is expensive if the peat is more than 2 m thick. More recently, especially in areas of thick organic sediments, the technique has been to preload the peat. This is done by placing sufficient fill on the organic sediments to bring about the maximum compaction. The amount of fill required and the period of time it should be in place to bring about this compaction is calculated in advance by the geotechnical engineer. On completion of the preloading, part of the fill is normally removed and the road is built on the remainder. This procedure was successfully undertaken on the Trans-Canada Highway in the Burnaby Lake area.

Some of the stony glaciomarine sediments are similar in appearance to till. Nevertheless, due to the different origins they may have contrasting bearing capacities – the glaciomarine sediments rating as poor and the tills as excellent. On the surface the two are not difficult to separate, but in drillholes they may be difficult to distinguish in places, especially if the glaciomarine deposits have undergone some natural preloading. When the Port Mann bridge was built, deep pile foundations were planned to rest on till, but during the construction major arguments developed amongst various engineers and geologists as to the depth at which the till was to be found. The confusion was likely due to the fact that a till-like glaciomarine deposit lies directly above till at this site (Fig. 14, section 49).

Foundation problems at the proposed Pitt River bridge are discussed by Peters (1973), who concluded that in this area about 25 m of Fraser River channel and floodplain deposits consisting largely of highly compressible organic silts and clays overlie about 55 m of sensitive marine silt, clay, and minor sand. Since this material lacks adequate bearing capacity, friction piles were necessary.

Tunnels

Tunnels are discussed in conjunction with foundation materials as it is these materials that they traverse. In construction of tunnels, however, the bearing capacity of the underlying material plays a much less important role than it does in the case of structures on the surface. Of course, if heavy loads use the tunnel, the bearing capacity is important. In construction of tunnels the presence of groundwater and caving ground are in many places major problems.

Included in this discussion are large tunnels for water, sewage, railways, and highway traffic; not included are the myriad of underground conduits installed for water, storm drains, sewage drains, electric, and telephone installations. In the Fraser Lowland this latter group is installed by excavating from the surface to a depth of about 1 to 3 m, installing drain pipes, and then covering them with suitable landfill. Due to the temperate climate, deep frosts are not a problem. During construction care must be taken to guard against collapse of the walls.

A railway tunnel beneath Vancouver intersects Tertiary sedimentary rocks and has presented no major problems in construction or maintenance. The Greater Vancouver Water System has major watermains crossing Burrard Inlet at First and Second Narrows; the water is conveyed down vertical shafts more than 100 m deep on the north side of Burrard Inlet, through tunnels driven in Tertiary sediments underlying the Inlet and then brought back to the surface on the south side of the Inlet where it enters the Greater Vancouver Water System. In the tunnel at the First Narrows, Tertiary bedrock was reached on the north side of the First Narrows at a depth of approximately 40 m below sea level. The shaft penetrating unconsolidated materials above the Tertiary bedrock was a cylindrical concrete caisson 7.3 m in diameter.

Some of the boulders that had to be removed in sinking this shalf were more than five tonnes and some had to be blasted in the confined space of the caisson. The bottom of the shaft was sealed with concrete and excavation proceeded through the concrete base into bedrock where it continued without difficulty (Smaill and Wynne-Edwards, 1933).

Only one major highway tunnel has been constructed in the Fraser Lowland – on Highway 99 under Fraser River at Deas Island. It is a split, four-lane concrete tunnel that was constructed as precast sealed lengths that were floated over the tunnel line and sunk into place in a previously prepared trench in the Fraser River bed sands. During construction water wells were drilled along the line of the tunnel and pumped to capacity in order to lower the groundwater table.

From the viewpoint of a geologist, by far the most interesting tunnel constructed in the Vancouver area is the Highbury trunk sewage tunnel extending from near Fourth Avenue south 4 km to southwest Marine Drive. It was also one of the most difficult to construct as it traverses unconsolidated sediments for 2.5 km of its length. The tunnel is 90 m below the land surface at its deepest point. At the north entrance it is in Tertiary bedrock but to the south the tunnel enters unconsolidated sediments consisting of lithologic units belonging to the Westlynn, Highbury, Semiahmoo, Quadra, Vashon, and Capilano formations (see Tables 3,4; cross-section A-A in Armstrong and Hicock, 1980b; Fig. 5, sections 1-4). All these formations are below the groundwater table which presented a major problem during construction; 107 water wells were drilled and pumped to control groundwater flow. In the southern part of the tunnel, saturated silts with interbeds of sand, probably Semiahmoo in age, were intersected. As these interbeds of sand were water-bearing, when one started to flow from the face, the water would move large quantities of sediment, forcing temporary abandonment of tunnelling operations. The tunnel was subsequently placed under air pressure in order to maintain the face (Brown, 1983; W.L. Brown and R.B. Erdman, unpublished report, 1962). The preconstruction drilling program was not done in sufficient detail to allow the consultants to interpret the complex Quaternary geology and predict some of the problems.

Construction Materials

In this section are discussed all the materials engineers and contractors might use in structural developments that have as their source the geological materials found in the Fraser Lowland and adjoining mountain slopes and valleys. These include sand and gravel, clay, till, crushed rock, and rock.

Sand and Gravel. Leaming (1968) discussed sand and gravel resources of the Strait of Georgia area, including all of the Fraser Lowland and adjoining mountain slopes and valleys. For information on terminology, size classification, standard tests for aggregates, processing of sand and gravel, estimation of sand and gravel reserves, and transportation, the reader is referred to Leaming (1968).

Leaming (1968, p. 1) wrote as follows:

"Sand and gravel are vital commodities in modern society. Their greatest importance lies in the construction of transportation facilities such as roads, airfields and railways but they are also widely used in concrete for bridges, dams, foundations and buildings. Vast quantities are used annually and although the material is at present relatively accessible, abundant and low-priced, without good planning this will not necessarily continue to be true. With increasing urbanization, depletion of the supply is accelerating, both by increased consumption and by reduced availability through zoning regulations. As the more accessible reserves become depleted or unavailable, new sources at greater distances must be found thus involving greater transportation costs. It is in the common interest that the best use be made of these resources. This will involve planning by municipal authorities and foresight by private industry."

These conclusions were based on information up to 1966 at which time more than 150 pits were being operated. As of 1978 there were more than 70 producing pits in the Fraser Lowland with a total output of the order of 2 700 000 m^3 per year (Hora and Basham, 1981). Several large operations have been forced to close because of new zoning regulations, including the largest, that of Construction Aggregates (Ocean Cement Ltd., 1968) at Mary Hill. The nearest major source of processed sand and gravel available to Vancouver is in Coquitlam River valley. The largest operator in Coquitlam valley was recently fined in excess of $150,000 for polluting the Coquitlam River (Vancouver Sun, February, 1981).

The lithologic units from which sand and gravel are produced are: Capilano, Sumas, Fort Langley, Vashon, Quadra, Coquitlam, and Semiahmoo glaciofluvial deposits; and Salish and Fraser River fluvial deposits (Table 4). At present the only identifiable Coquitlam glaciofluvial deposits being mined are found in Coquitlam valley, and the only Semiahmoo glaciofluvial deposits being mined are in a pit in east Delta municipality. Probable Semiahmoo glaciofluvial deposits are being mined in a pit in Coquitlam valley. Vashon glaciofluvial deposits are quarried in the Grant Hill area east of Haney and near the Langley-Surrey municipality boundary, just north of the International Boundary. As the Vashon and older glaciofluvial deposits are covered by post-Vashon deposits or Vashon till throughout the Fraser Lowland, their distribution is not shown on the surficial maps except in cliffs and steep slopes. A study of the stratigraphic sections and cross-sections shown in Figures 5 to 16 indicates that these older glaciofluvial deposits are widespread (for example, Fig. 5, sections 1-7; Fig. 6, sections 9,13,15; Fig. 7, sections 16-20, Fig. 10; Fig. 16, sections 57,58).

The remaining operating pits are in Fort Langley, Sumas, Capilano, Salish and Fraser River sediments, the majority using Sumas sand and gravel. The widespread distribution of these sand and gravel units is shown on the surficial maps of the Fraser Lowland (Armstrong, 1980a,b; Armstrong and Hicock, 1980a,b). Many of the stratigraphic sections and cross-sections illustrate the thickness of these units (Fig. 8-11,13, 14). Table 4 indicates the general nature of all the sand and gravel units and their average and maximum thicknesses. The units include some which are mainly sand, some which are mainly gravel (ranging from poorly sorted silty boulder gravel to well sorted pebble gravel), and some which contain lenses of till and glaciomarine sediments.

Except for Fraser River gravels, the constituents of the sand and gravel deposits are almost entirely derived from the bedrock exposed in the Coast and Cascade mountains. Although Fraser River gravels are in part derived from the same sources, they are also derived from bedrock north and east of the Coast Mountains (see *Bedrock Geology*). Listed below are the results of studies in which the lithology of pebbles found in some of the gravel unit are identified. The pebbles have been separated into eight major groups, namely:

1. **Granitic rocks** (GR) which include granite, granodiorite, **quartz diorite, diorite, migmatite, granulite,** and associated coarse grained **metamorphic rocks** (Roddick, 1965); these may be derived from the Coast or Cascade mountains but are at least twice as abundant in the Coast Mountains.

2. Metamorphic rocks (MR) which include medium and fine grained **amphibolites, greenstones, metasediments, metavolcanics, schists,** and **gneisses;** these may be derived from the Coast or Cascade mountains but are commoner in the Coast Mountains.

3. Argillaceous rocks (AR) which include **shale, slate, argillite,** and **pelite;** these are mainly derived from the Cascade Mountains.

4. Cherty rocks (CR) which include **chert** and cherty argillite derived entirely from the Cascade Mountains.

5. Volcanic rocks (VR) which include **porphyritic** and nonporphyritic flows, **tuffs, breccias, dykes,** and **sills;** these may be derived from the Coast or Cascade Mountains.

6. Quartzitic rocks (QR) which are mostly true **quartzite** from the Cascade Mountains or, particularly in the case of Fraser River gravels, much to the north in the Cariboo Mountains.

7. **Quartz** (Q). The source is indeterminate.

8. Miscellaneous rocks (MSR). Included here are Tertiary sediments and miscellaneous other sedimentary rocks including **conglomerate, sandstone,** and **greywacke** from the Cascade and Coast Mountains.

The gravels show the following distribution of pebbles:

1. Vashon gravel, 5 samples from north of Fraser River – 70% GR, 22% MR, 0.5% CR, 3% VR, 1% QR, 0.5% Q, 3% MSR; source, Coast Mountains.

2. Quadra gravel, 5 samples from south of Fraser River –42% GR, 21% MR, 3% AR, 8% CR, 14% VR, 8% QR, 2% MSR; probable source, Cascade Mountains and Coast Mountains in Harrison Lake area.

3. Fort Langley gravel, 34 samples – 43% GR, 19% Mr, 8% AR, 12% CR, 10% VR, 5% QR, 1% Q, 2% MSR; source, Cascade Mountains.

4. Sumas gravel, 30 samples – 46% GR, 18% MR, 4% AR, 12% CR, 8% VR, 6% QR, 1% Q, 5% MSR; source, Cascade Mountains.

5. Capilano gravel, 5 samples from the north side of Burrard Inlet – 74% GR, 18% MR, 0.5% AR, 0.5% CR, 3% VR, 0.5% QR, 0.5% Q, 3% MSR; source, Coast Mountains.

6. Fraser River gravels – 4 samples from bars between Rosedale and Hope – 24% GR, 8% MR, 12% AR, 9% CR, 12% VR, 28% QR, 1% Q, 6% MSR; probable source of at least 50% of material is from north of Lytton, that is, east of the Coast Mountains, north of the Cascade Mountains.

Most of these pebbles are hard, inert fragments, but some unsound material is present in places. A noticeable feature of many pits is the decomposed granitic stones which may amount to as much as 10% of the total granitic component. In most cases these rocks are so weak that they disintegrate on washing and screening. The decomposition of the granitic stones appears to be restricted to those containing **biotite mica** and apparently results from chemical changes in this mineral during weathering (Bustin and Mathews, 1979). Shales and argillites are relatively weak rocks and in those pits where they form an appreciable percentage of the components, an inferior gravel results. Many pits contain some chert pebbles. This is a deleterious substance in many parts of the world as some types of cherts react with **alkali** in the cement to form "pop-outs" and hence failures in the finished concrete; however, the chert found in pits in the Fraser Lowland is not alkali reactive.

The sands are largely composed of mineral grains of which quartz, feldspar, and mica are the main representatives with minor quantities of fine grained rocks, **hornblende, hypersthene, magnetite,** and **zircon.** Most gravel deposits in the Fraser Lowland are sandy and are classified as sandy gravel. Only rarely is it necessary to add sand to a gravel deposit to obtain the required grading. Pits in fine sandy gravel are commonly short of crushing material and when this material is required blending of larger sizes from other sources is the solution.

In the operation of sand and gravel pits, difficulties that may be attributed to geological conditions include:

1. excessive overburden of glacial till or glaciomarine sediments, both of which are difficult to handle with a shovel and to dispose of; some of the larger operators process the overlying till;

2. the 'lensy' nature of many of the gravel beds; as a result, the **pit-run** contains much sand for which the market is limited especially as sand dredged from Fraser River can commonly be marketed at a lower price;

3. the large size of some of the boulders, which in many places are from 1 to 4 m in diameter and cannot be handled without blasting; the large boulders are set aside in many pits and used later to make crushed rock;

4. the occurrence of interbedded thin strata of silt or clay-sized materials which cannot be handled satisfactorily in the washing and sizing;

5. the presence at the base of some deposits of glaciomarine sediments or glacial till; if the ridges are high, they make the overlapping gravel and sand deposit too thin to mine economically;

6. the presence of a high groundwater table, a particularly troublesome problem to the small operator using only shovels and not washing or crushing.

The Fraser Lowland is indeed fortunate in the abundance of good gravel and sand deposits close to Vancouver and, as a result, enjoys some of the lowest cost gravel and sand products in North America. In most small operations, only pit-run gravel and sand are produced. In many medium-sized operations and all large operations, the material is washed and sized and may also be crushed.

Clay. During the past 80 years the glaciomarine and marine clay-rich sediments of Capilano and Fort Langley formations have been utilized in the Surrey, Langley, and Haney areas to produce common structural clay products including hollow clay drain tile, structural tile, face brick, common brick, flue lining, and flowerpots. These deposits, however, present two major handling problems: (1) they are normally saturated and as a consequence form wet muddy surfaces in the pits and (2) they must be dried before processing. As transportation has improved over the years and the cost of using clay products brought from outside the Fraser Lowland has dropped, all of the plants using the geological materials referred to above have closed. The last to close was the plant operated by Haney Brick and Tile Limited at Haney which operated for more than 80 years before closing in 1978. The clay at this site is from the Fort Langley Formation and is classified as a silty clay (Fig. 4) as it contains about 46% clay, 42.5% silt, and 11.5% fine sand. This silty clay, which is glaciomarine in origin, contains a few widely scattered stones and fossil marine shells. A chemical analysis of a typical sample is as follows: SiO_2 – 58.5%, Al_2O_3 – 21.2%, Fe_2O_3 – 8.6%, CaO – 6.5%, MgO – 0.5%, and ignition loss 4.8%.

Up until a few years ago Tertiary shales exposed on the north face of Mount Burnaby were used to produce a variety of clay products.

Clayburn Brick and Tile company operate several pits in Tertiary shales and fireclays exposed on the east side of Sumas Mountain at Kilgard where fireclay and brickclay are mined from several seams. The largest of these operations is that of Clayburn Industries Ltd., who have been in production more than 65 years. In 1974 the underground mine at Kilgard produced 15 496 tonnes of fireclay and open pit development in other seams produced 71 163 tonnes of brickclay (B.C. Department of Mines and Petroleum Resources, 1975).

Till. As mentioned, some of the large sand and gravel operations are capable of processing till along with the sand and gravel, especially as most tills in this area contain only minor amounts of clay. Due to the fact that in its natural state in this area till commonly has low compressibility and is a hard, dense deposit, it can be used satisfactorily for landfill for highways and other structures.

Crushed Rock and Rock. Although granitic rock in almost unlimited quantities occur in both the Coast and Cascade mountains, and much of it would be suitable as building stone, it is not competitive in price with imported building stones brought in by ship. Only two fairly large granite quarries are operated in the Fraser Lowland – on the west side of Pitt River about 9 km north of Highway 7 bridge across the Pitt, and on Sheridan Hill across the river.

The Gilley pit on the west side of the river has been in production since prior to 1916 (Parkes, 1917) quarrying quartz diorite. Crushed rock **riprap** and **armour rock** are produced (343 731 tonnes in 1973). The owners are now Construction Aggregates Ltd.

The Pitt River quarry, on the east side of Pitt River on the northern side of Sheridan Hill, is owned by Dillingham Corporation of Canada Ltd. Quartz diorite is quarried; crushed rock, riprap and armour rock are produced (544 220 tonnes in 1974).

Geological Hazards

In land use planning and development in the Fraser Lowland and lower slopes of the adjoining mountains, the probability of land and structural damage with resultant loss of money, and in extreme cases loss of life, may result from the lack of knowledge or lack of adequate precautions in areas of hazardous geological conditions. These **geological hazards** include disasters resulting from both natural geological conditions and the work of man which may intensify the natural geological hazards or create entirely new ones. In some parts of the world geological hazard impact reports must be prepared before a decision is made as to whether a site may be used as proposed (for example, this the law now in California, USA). The common natural geological hazards are floods, **landslides,** coastal **erosion, volcanism,** geologically active **faults,** and **earthquakes.** In the Fraser Lowland, floods, landslides, the coastal erosion are in many places brought about or intensified by the work of man. In the ensuing discussion a few examples will be given of geological hazards in the Fraser Lowland and areas will be indicated where hazardous conditions occur.

Floods

The climate, physical features and geology of the Fraser Lowland and adjoining mountainous areas make floods inevitable under natural conditions. Examples of floods in the past 85 years, the causes, and measures taken by man to combat floods are discussed below. These floods are of two main types: (1) those caused by spring runoff, particularly along Fraser River, and (2) those caused by greatly increased flows in the mountain and lowland rivers and streams crossing the Fraser Lowland. These last are mainly autumn and winter floods during periods of excessive precipitation and at times above-average temperatures. Flooding of the low, flat-lying land bordering the sea may be much accentuated during periods of high tides and/or gales.

The surficial geology maps of the Fraser Lowland (Armstrong, 1980a,b; Armstrong and Hicock, 1980a,b) delineate the areas subject to flooding. Floods are undoubtedly our greatest geological hazard and landslides the next most serious hazard, many of which result from the same basic causes as floods.

Fraser River. It is common throughout the world that rivers flowing through broad, low valleys overflow their banks at the time of high water. Fraser River would normally overflow its banks annually during the spring freshet if no man-made barriers existed. During much of the year the banks are from 2 to 5 m above river level. At the time of high water, the level of the water in the river, as measured at Mission, may rise as much as 6 to 8 m. The flat areas bordering Fraser River that are subject to floods are the floodplain and delta. During the past 85 years high water level at Mission has exceeded 7 m[1] in 1894, 1948, and 1950. To combat flooding an extensive system of **dykes (levees)** has been built along the Fraser and since the disastrous flood of 1948 they have been improved to the extent that they are now believed to be capable of handling a high water of 8 m[1], which is considered to be the probable maximum once every 150 years. Since 1973 a floodplain policy forbids new building developments below the 9 m[1] level at Mission (existing developments are excluded). The 1948 flood destroyed sections of the existing dykes and inundated more than 2000 ha of land and left more than 2000 people homeless. Although total damage is unknown, at least 20 million dollars were paid in flood costs (Barker, 1974). The dyke failures occurred in areas where the river changes course; the main current struck the dykes and eroded them. Seepage under the dykes will always be a problem because in many places, especially from Mission east, the dykes have been built directly on permeable sand and gravel or on thin (less than 3 m thick) overbank deposits of silt, silt loam, and clayey silt loam which overlie the sand and gravel. Consequently, when the water level in the river is higher than the land behind the dyke, hydrostatic pressure forces some of the water through the sand and gravel beneath the dyke, saturating or flooding the dyked land.

The lower reaches of Fraser River in the delta area are greatly affected by high tides and local flooding, especially when heavy precipitation occurs; for example, during the winter 1977-78 Mitchell Island in the north arm of the Fraser was covered by water for short periods during high tide.

Nicomekl and Serpentine Rivers. Floods in the Nicomekl-Serpentine lowland are common events during the winter season of high precipation. Nicomekl and Serpentine rivers, occupying an old arm of the sea, flow in shallow channels cut into thick impervious deposits of marine sediments and are unable to handle the runoff from both the adjoining uplands and the valley during the rainy season. Both rivers are bordered by extensive dyke systems. I grew up in Cloverdale, which lies on the border of the flat area in which Nicomekl River flows, and recall that almost every year the lowland area was covered by 0.3 to 1 m of water for periods of a week or more.

[1] These levels are above the gauge datum which is approximately 6.5 m above sea level (Geodetic Survey of Canada, 1977).

A case history of the 1935 flood – one of the worst floods in the area – has been outlined by the engineering department of the municipality of Surrey and is summarized below as it explains the conditions causing flooding and the drainage problems.

During the night of January 20, 1935, more than 500 mm of snow fell onto already frozen ground which was covered with about 200 mm of snow from a previous snowfall, the equivalent of about 70 mm of water. On the morning of January 21 it started to rain, and more than 125 mm fell in the first 24 hours of the storm. A total of 300 mm of rain fell in the four days that the storm lasted. As already stated in the section dealing with climate, January 1935 was the wettest month ever recorded at New Westminster with total precipitation about 530 mm. This storm and the antecedent snowfall are considered to be a 100-year storm, that is, in any given year such a storm has a 1 in 100 chance of happening.

The flooding in the Nicomekl-Serpentine lowland was enhanced by two other serious factors: 1) the storm occurred during a period of high tides and 2) both rivers were frozen over at the commencement of the storm. The ice broke up as the rivers rose and blocked the floodgates at the dams which existed and still exist near the mouths of both rivers. Attempts to clear the ice through the flood-boxes using dynamite were unsuccessful and the rivers overflowed the dykes and increased the depth of floodwaters in the valley to more than 1.3 m. At the peak of the flood nearly all the lowland area west of 184th Street (1 mile east of Pacific Highway 15) was under water, including most of the roads; many of the interior dykes were submerged. Today many of these dykes are higher.

Since 1935 two other notable storms have occurred: on January 24 and 25, 1951, 103 mm of rain fell in 46 hours and from November 2 to 4, 1955, 140 mm of rain fell in 50 hours. Neither storm was accompanied by high tides and the area of land flooded was small compared to the 1935 flood. The floods in the Nicomekl-Serpentine lowland have caused over the years considerable damage to private property and public roads, but the greatest cost probably is the loss in yield of crops due to poor drainage.

Chilliwack River in Sumas Valley. Flooding in Sumas valley, especially in the Yarrow area, is caused by three main factors: (1) periods of very heavy precipitation augmented by snowmelt greatly increase the flow of Chilliwack River, which is diverted through Sumas valley by the Vedder Canal; (2) a nearsurface groundwater table forces excess water into the surface drainage system; and (3) the flat-lying surface of the valley provides a negligible amount of gravity flow. The Vedder Canal flows between earth dykes (levees). Along the eastern part of the canal the levees overlie pervious sand and gravel. The tremendous variation in the flow of Chilliwack River has been discussed in the section on *Climate*. For example, the flood on December 3, 1975, which caused thousands of dollars of damage in the Yarrow area and in Chilliwack valley itself, recorded the eighth highest daily flow in 65 years (Munshaw, 1976). Dredging and deepening Vedder Canal has been suggested as one method of controlling flooding in the Yarrow area but this would impair fish spawning grounds.

Mountain Streams. In addition to Chilliwack River and smaller streams that drain the Cascade Mountains, numerous streams (referred to in the section on *Drainage*) flow off the Coast Mountains. Regularly all the large mountain rivers, and most small streams, reach flood proportions and, where not controlled, may cause considerable destruction. Many of these mountain streams drain slopes where impervious till or bedrock is found at the surface. During heavy precipitation and snowmelt most of the water must be removed by surface flow, which may be extremely rapid, especially where the vegetation cover has been removed by forestry operations and by the development of subdivisions.

The daily flow of Coast Mountain streams varies tremendously (see section on *Drainage*), ranging from a high of 50 times or more the mean annual flow to a low of less than one one-hundredth of the mean annual flow. Typical of damage caused by these streams where the flow is not controlled is the damage done by Mosquito Creek, North Vancouver, in November 1955 during a period of heavy precipitation. This creek in the summer can be walked across stepping from stone to stone without getting wet. In November 1955 it was a raging torrent, probably at least 2-3 m deep and 10-20 m wide. At this time the creek reoccupied an old channel in which numerous modern homes had been built and most of these homes were destroyed. No authority would accept the responsibility for allowing the homes to be built at this site. Since then building restrictions are much better controlled.

The 1975 flooding of Sumas valley brought about by flood conditions on Chilliwack River was accompanied by flooding and much damage in Chilliwack River valley. Washouts, slope failures, and **mudflows** were widespread. During the flood a minor bridge was destroyed and several forest access roads were washed out; the main access road along Chilliwack River was cut in one place, covered by a mudslide in a second, and subsided due to slope failure in a third place (Munshaw, 1976).

The Mosquito Creek and Chilliwack River floods are only two examples of probably innumerable floods in the past 65 years that have occurred along mountain rivers and creeks flowing into the Fraser Lowland. Although such floods are inevitable, measures can be taken to limit the extent of damage. Protection against floods may be enhanced by vegetation cover and check dams. Other protective measures, such as planning, that would forbid development and logging in flood-prone areas are designed to minimize the destructive effects of these natural forces. Dams on the Capilano, Seymour, Coquitlam, Alouette, and Stave rivers are aids in controlling the water flow. The maintenance of forest growth in the Capilano, Seymour, and Coquitlam river basins by the Greater Vancouver Water Board in order to protect the water supply has certainly helped to regulate the flow of these rivers.

Excessive flooding occurred in late December 1980 in many parts of southwestern British Columbia, with total damage exceeding 10 million dollars. The only parts of the Fraser Lowland flooded were in the Hatzic and Matsqui areas. The flooding was brought about by heavy precipitation (record totals for November and December) and high temperatures causing snowmelt.

Landslides

Landslide as used here refers to the en masse downslope movement of materials consisting of one or more of the following: rock, unconsolidated sediments, topsoil, vegetation cover, and man-made fills or structures. The moving mass may proceed by falling, sliding, or flowing, or by their combinations. The normal downslope creep that produces colluvium on the mountain slopes is not included in the term landslide.

Described below are examples of landslides that I have observed and classified according to movement. The probable causes of slope failure are also outlined as are areas of potential slides. The climate, physical features, and geology of the study area are of a nature that makes

landslides in parts of it inevitable. In many places the principal cause of the slide cannot be eliminated, and thus attempts must be made to alleviate the effects of landslides. In some places it may be necessary to forbid development in slide-prone areas, for example on the north slope of Mount Burnaby.

Landslides in Bedrock. Included here are rockfalls and landslides in which bedrock comprises the major part of the material involved in the slide. Some overlying Quaternary sediments are normally involved as well as the overlying pedological soil and plant growth.

Slides. The two largest slides of this type that I have investigated are on the north side of Mount Burnaby along Barnet Highway and on the north side of Cheam Peak along the Trans-Canada Highway. They include large masses of bedrock.

Mount Burnaby is underlain by interbedded Tertiary conglomerate, sandstone, siltstone, and shale. These beds strike approximately east-west and dip about 10° to the south. The steep north slope of the mountain represents a major east-west fault. During faulting, which apparently predates Quaternary sedimentation, the Tertiary bedrock developed deep-reaching **shear** surfaces along which sliding later took place. **Rockfalls** may have accompanied the sliding. The major bedrock sliding predates the advent of white settlers. The bedrock slides are typical of **slumps** in which the sliding bedrock moves in a series of blocks with the top surface of each block tilting backwards towards the slope, that is, rotational slump blocks. Some of the slide blocks exceed several million tonnes in mass. The slide debris includes material from small fragments to these large blocks. Later, some unconsolidated sediments were deposited on the surface of the slide and eventually became thoroughly mixed with the blocks of bedrock, largely as a result of groundwater action aiding downslope movement. This continued until an angle of repose was established. On several occasions the angle of repose has been disturbed by the construction of roads and railways; each time new slump slides have developed in the old slide material, the sliding continuing until an angle of repose was established once again. When the Barnet Highway was upgraded in the 1950s one such slide developed. The slide involved a blacktop driveway, leading to several homes, which demonstrated some of the classical step **scarps** of slumps. The problem of further serious sliding was brought under control by installation of lateral drains. Also, the homes were removed and further development in the area stopped.

The Cheam slide was studied by Smith (1971) whose conclusions are summarized here. The slide debris at its toe overlies Fraser River floodplain gravel and sand, the surface of which is at about 16 m elevation. The slide debris, which varies in thickness from a fraction of a metre to 60 m, probably averages 3.5 m thick and has a volume of $4 \times 10^7 m^3$. The base of the slide has an undulating surface which may be of glacial origin. The surface of the slide has an average elevation of 45 m and consists of hummocks and arcuate ridges with vertical relief of more than 10 m in places. This surface topography was formed by the slide movement. The slide debris consists of blocks of Mesozoic and Paleozoic bedrock derived from the outcrops exposed on the mountain side to the south and east. The blocks, which range from pieces many tonnes in size to small fragments a few centimetres across, are mixed with much fine material which probably is in large part comminuted bedrock. The nearest source of the **limestone** that is abundant in the bedrock blocks and fragments is at an elevation of about 1200 m on Cheam Peak to the south and east where a probable headwall scarp exists. Much of the slide debris must have commenced its movement as a result of rockfalls and avalanches and accumulated near the base of the mountain where it continued moving mainly by sliding. Although the major part of the slide is prehistoric, sliding, rockfalls, and avalanches still occur during adverse weather conditions.

No other major areas of rock sliding occur in, or on, the lower slopes of the mountains adjoining the Fraser Lowland; however, rock slides are common in the valleys throughout the Coast and Cascade Mountains. One of the most spectacular rock slides in recent years occurred on January 9, 1965, 160 km east of Vancouver on the Hope-Princeton highway. The original road is now buried to a depth of up to 79 m under the pile of 130 million tonnes of rock that came down from the steep northern side of the valley. Two small earthquake shocks that were associated with heavy snow avalanches and some landslides appear to have been the triggering mechanism (Mathews and McTaggart, 1969). Much of the slide debris resulted from rockfall.

On the surficial geology maps of the Mission and Chilliwack areas Armstrong (1980a,b) has mapped numerous areas of fan deposits at the base of adjoining mountain slopes. These originated by the gravational falling, rolling, and sliding of bedrock debris, normally accumulating at the contact of drainage channels with the lowland areas. The flow of water is intermittent along most of these channels.

Rockfalls. A **rockfall** consists of the relatively free fall or precipitous movement of a newly detached segment of bedrock of any size from cliffs or other very steep slopes. Rockfalls are common in the Coast and Cascade mountains adjoining the Fraser Lowland, for example, along the Trans-Canada Highway east of Rosedale, the southern provincial highway from Hope to Princeton (east of study area), and the Howe Sound highway to Squamish (north of study area). In these areas rockfalls are a constant problem especially during the October to April heavy rainfall period. They vary from small rock fragments to large blocks of rock many tonnes in size. Generally the rockfalls occur where cracks (**joints** and shears) in the bedrock become filled with water which, upon freezing, expands and helps to loosen the rock. This is most common where a set of cracks dips downward from the face of the cliff or slope.

In the descriptions of the Mount Burnaby and Cheam landslides, the relative role of rockfalls was pointed out; in the Cheam area especially, rockfalls will continue to have an important role in the future. One area within Vancouver prone to small rockfalls is along the seawall walk in Stanley Park from Prospect Point to Ferguson Point. In much of this area Tertiary sandstone forms near vertical cliffs from 10 to 25 m high. During the two year period from 1976-1977, two small rockfall slides occurred between Prospect Point and Siwash Rock, the latest being on December 25, 1977 when about 27 m^3 of sandstone cliff, loosened by frost and runoff, fell on the seawall walk. The debris included blocks up to one tonne or more plus smaller pieces of rock, sand, and tree stumps. A Park Board spokesman said there are cracks in the rock and that it is impossible to determine in advance which cracks are going to give away (Vancouver Sun, December 27, 1977).

Landslides in Unconsolidated Sediments. During the past 30 years I have observed several slides in unconsolidated sediments in which sliding and flowing have been the main types of movement. No sharp division can be made, however, between slides in which sliding movements predominate and those in which flowing movements predominate. The predominant type of movement depends on the degree of saturation and the types of sediments above the slide surface.

Slides. A good example of a slide in which the sliding movements predominate is a relatively small slide that occurred in the 1950s in the seacliff bordering Semiahmoo Bay. At this site the seacliff is approximately 60 m high and consists of nearly impervious Semiahmoo glaciomarine and marine sediments and till at the base, overlain by pervious Quadra silts, sands, and gravel capped by thin deposits of impervious Vashon till and Capilano glaciomarine sediments and pervious intertidal deposits (Fig. 6, section 11). This seacliff presents an unstable slope at all times but especially in areas where the surface drainage, mainly directed into small streams, penetrates the impervious Vashon and Capilano sediments and enters the underlying pervious Quadra sediments. Man-made drains that direct water over the top of the cliff and normal surface runoff add to the flow of the streams. The Quadra sediments contain groundwater year round and provide water to the small streams during dry periods. During periods of excessive rain, however, the groundwater in the pervious sediments is greatly increased from all the sources mentioned above and, in addition to greatly increasing the flow of the small drainage streams, it seeps in a steady stream at the interface of the upper surface of the underlying impervious Semiahmoo clay-rich sediments. The landslide apparently started as a landslip along this interface but was soon joined by flowage of the Semiahmoo sediments themselves, which apparently was caused by the increasing water content and small slip surfaces within these sediments. The Burlington Northern railway runs around the base of this cliff and at places its roadbed has been cut into the Semiahmoo sediments. Apparently when the unstable conditions referred to above developed in the winter, the vibration of a train triggered the slide, as it occurred when the train was passing. The slide debris hit the third car back and pushed two cars off the track over the embankment onto the beach.

Detailed geological studies of this seacliff between White Rock and Crescent show that many small landslides have occurred in the past. The most recent slide in this area took place on November 21, 1980 (Vancouver Sun, November 21, 1980). November 1980 was the wettest November on record at the Vancouver airport weather station where 311 mm of rainfall was recorded (Vancouver Sun, December 1, 1980). Although future landslides are probably unavoidable, they could be minimized by redirecting as much surface drainage as possible away from the cliff or by piping the surface water from the top of the cliff down the slope to sea level. In addition vegetation should be encouraged on the slope.

Similar geological conditions exist on the north side of Chilliwack valley from Tamihi Creek west and many landslides have occurred in this area (Munshaw, 1976).

Flows. During construction of a steel rolling mill at Port Moody in 1954, an old slide of major dimensions was exposed. The area at the southeast end of Burrard Inlet where the plant was built consists of 3 to 10 m of very poorly sorted gravel, containing small pockets of clay and silt, overlying Vashon till. When the area was bulldozed a buried forest was found in which were remnants of trees that had been sheared off by the slide. On further examination of the nearby area, the probable source of the material was found approximately 0.8 km to the south near the crest of the hill south of Port Moody. Here the overlying Vashon till has been breached over a fairly extensive area and the underlying glaciofluvial gravel and sand are exposed in a bowl-shaped area from which the slide debris appears to have been derived. Probably the slide commenced as a slump during excessive rainfall which removed the vegetative cover, allowing the saturated underlying sediments to wash down the slope probably in the form of a debris flow. Possibly an impervious silty clay body formed an interface at which the slide started as such sediments have recently been exposed on the lower slope of the same hill.

A damaging landslide occurred in the Port Moody area in December 1979. Between December 12 and 14 approximately 130 mm of rain fell in the Port Moody area and between December 16 and 18 another 150 mm of rain fell.

Eisbacher and Clague (1981, p. 211-212) described the landslide as follows: "At the end of the first phase of the December storm . . . a slab of sediment about 5000 m^3 in volume collapsed at the edge of the Coquitlam upland. After the initial collapse, the sediment became oversaturated with water and rapidly advanced down a minor gully, entering one of the main ravines dissecting the escarpment face. It continued down the main ravine for more than 500 m and irrupted over a densely urbanized section of Port Moody. The debris flow picked up additional sediment and stripped vegetation from the floor and sides of the ravine down which it travelled. Tree trunks incorporated into the flow were responsible for much of the impact damage in Port Moody. The mobilization of the debris after its initial collapse from the head scarp was achieved by large amounts of runoff water flowing into the ravine from the adjacent uplands. In addition, a storm-sewer pipe discharged directly onto the toe of the incipient slide.

"Damage to houses and storm sewers in Port Moody was considerable . . . although/again by good fortune no lives were lost. When the debris came to rest, runoff water flooded through Port Moody and reworked the debris flow deposits, causing additional damage. During the storm, other smaller failures occurred along the slopes above Port Moody, prompting temporary evacuations of some homes.

"Much of the slope which straddles the municipal boundary between Coquitlam and Port Moody probably will never be used for home sites. Nevertheless, past urbanization has infringed on it both from below and above. Although vegetation may help to stabilize such slopes, it obviously cannot prevent shallow landslides during storms of the 1979 intensity. Meticulous care for surface runoff, however, could reduce the hazard considerably."

Somewhat similar, but much smaller slides occurred between Port Hammond and Haney in December 1980. Several metres of Sumas glaciofulvial gravels overlie more than 25 m of Fort Langley glaciomarine stony silty clay loam. The clay loam, which is exposed on a steep slope, develops slumps during periods of excessive rainfall.

The post-Vashon glaciomarine stony silt, silt loam, silty clay loam, silty clay, clay loam, loam, and associated offshore marine sediments of similar composition but stone free are subject to considerable landsliding. These materials probably are the engineer's **sensitive clays;** this means that their **shear strength** is reduced to a very small fraction of their former values on remolding (see **remolded soil**) at constant moisture content. When materials of this type are exposed in sloping to vertical faces along river and creek banks and in man-made cuts, landslides may occur especially in wet weather. The movement of the landslide debris is in the form of an actual flow as excess water inside the material is released and the material converted to liquid mud. Slip surfaces within the moving mass are usually not visible or are short lived. Slip surfaces along which the landslides commence in many places develop originally along cracks formed during dry weather. During wet weather these cracks, as well as the overlying material, become saturated and the pore water pressure is built up so that part of the material is supported by interstitial water with a consequent decrease in shear strength.

West of Nicomekl-Serpentine valley these glaciomarine sediments are commonly less than 8 m thick and consequently, except on steep natural or excavation slopes, present minor sliding problems; however, east of the valley, slopes up to 150 m high containing large volumes of these sediments are found (Fig. 9, section 27). Sliding has occurred along the Canadian Pacific railway near Albion and the Canadian National railway near Mount Lehman Road and east of Fort Langley. Sliding is common along Nathan Creek valley, particularly along new roadcuts. As a general rule whenever these materials are exposed by removal of vegetation, landslides occur during the wet periods. Stabilization of the slopes under normal conditions can be brought about by reducing their steepness, maintaining vegetation, directing as much surface drainage away from the slopes as possible, and not allowing heavy structures too near the tops of the slopes.

Landslides also are common in the glaciolacustrine deposits (Table 4); however, thick deposits are found only in the mountain valleys in areas of no major development. On the west slope of Coquitlam valley near the south end of Coquitlam Lake (Fig. 16, section 56) a large slide can be seen, exposing a thick section of interbedded silts and fine sands. The sliding appears to have initiated during wet weather when the thoroughly saturated sands and silts commenced to flow, probably following relatively minor slumps.

Washouts. Included here are the dominant type of mass movement phenomena that occur in the Fraser Lowland and which have previously been referred to as washouts (Armstrong, 1956, 1957, 1960a,b, 1961).

Washouts occur in steep slopes where thick pervious deposits, particularly sand and sandy silt but also gravel, underlie a thin (up to 5 m) or discontinuous mantle of impervious till and glaciomarine stony silty clay loam (Fig. 5, section 5; Fig. 6, sections 9, 15; Fig. 16, section 55). These pervious materials contain groundwater that seeps out at the surface of lower impervious sediments if they are above sea level. Normally small streams drain these slopes and the land above the slopes; the streams may be nearly dry much of the year but become torrents during heavy precipitation, particularly where man-made drainage is diverted to them. These streams rapidly erode the pervious materials and undercut the impervious sediments overlying them causing them to collapse. The stream sediment load, which is redeposited at the base of the slope, is augmented by fine sediment moved by excessive groundwater seepage along the face of the slope. This seepage is greatest at the interfaces with nearly impervious layers.

Two major washout slides occurred (1) in the Point Grey seacliff at the University of British Columbia in January 1935 and (2) in the west slope of Coquitlam River valley during the winter of 1951-52. In January 1935 the weather was probably the worst experienced since the area was settled from the viewpoint of slope stability. The weather at that time has already been described in the section on flooding in Nicomekl-Serpentine valley. To recapitulate, more than 370 mm of precipitation fell on frozen ground in four days. In the University of British Columbia area much of this water drained into a small creek – the Jordan – which became a torrent that washed out about 100 000 tonnes of Quadra Sand that is so prominently displayed in the seacliffs at Point Grey (Fig. 5, section 5). The stream was entrenched below a thin mantle of Vashon till and during the washout the till was undercut and fell into the stream channel, a bridge and several buildings were washed out, and a new sand beach was formed. The lowest 15 m of Quadra Sand is interlayered with nearly impervious clayey silt and organic sediment, at the surface of which much seepage of groundwater occurs. The cliff suffers from sliding, gullying, and slumping every winter during periods of heavy precipitation. Marine erosion discussed in the next section helps complicate the picture. As a result of all processes the cliff is receding about 30 cm per year.

The 1951-1952 washout on the west slope of Coquitlam River was started by a small spring-fed stream issuing from the base of 100 m section of pervious Quadra Sand, Coquitlam sand and gravel, and Cowichan Head or older silt at its contact with impervious, partly compacted Semiahmoo or older glaciofluvial gravel (Fig. 16, section 55). Seepage and springs normally issue at this interface, and during heavy rain the groundwater content of the pervious material became overloaded and the flow of the small spring-fed stream increased many times, starting erosion which probably commenced with the immediately overlying silts becoming fluid. Within 24 hours more than 300 000 to 450 000 tonnes of material were washed out into Coquitlam River, blocking it for several days.

During the course of mapping Fraser Lowland, evidence of many washouts slides similar to those described above were observed. Areas that are prone to such washout slides, and in most cases bear extensive evidence of old washouts and accompanying gullies, include (1) the seacliffs at Point Grey; (2) the north slope of the upland south of Fraser River east of Port Mann bridge; (3) the west slope of Coquitlam valley south of Coquitlam Lake; and to a lesser extent (4) part of the west slope of the Surrey upland between Highways 1A and 10; and (5) the north slope of Nicomekl-Serpentine valley between Colebrook and Highway 99A. In all these areas possible future washouts can be minimized if vegetative cover is not removed and if the drainage of these slopes is brought under control.

Washouts resulting from man's activities have occurred in several areas, for example at Mary Hill and Capilano valley.

In the spring of 1953 a large washout occurred in the then Gilley Brothers (later Construction Aggregates) gravel pit at Mary Hill. At the site of the washout, silty Vashon glaciofluvial gravel and sand underlying two discontinuous layers of Vashon till were being mined (Fig. 7, section 16). The glaciofluvial deltaic sediments dipped about 25° to the south and interbedded with them was a relatively impervious sandy silt bed about 70 cm thick. When the shovel cut through this bed a reservoir of groundwater impounded behind it was tapped. At first the flow was only a few tens of litres per minute and was not considered dangerous; however, during the night, apparently as a result of the fines being washed out, the whole slope commenced to slide and flow, and within a few hours a pit in excess of 60 000 m^3 was opened. A conveyor belt, monitor, shovel, bulldozer, and part of a road were buried beneath 3 m or more of gravel, sand, and till. The peak flow of water exceeded 5000 L per minute although within three months it was reduced to less than 200 L per minute; none of these flows were measured, they are estimates only.

An unusual washout occurred following the construction of the Cleveland Dam across Capilano River and after the reservoir had been flooded to its present level. Actually it probably should be referred to as minor slumping resulting from conditions similar in part to those causing washouts. Small seepages were discovered on the downstream side of the dam in the embankment to the east of the dam. These were accompanied by relatively minor slumping. Investigation showed that groundwater contained in a permeable gravel and sand unit V2 (Fig. 16, cross section) was the source of the seepage which had caused the slumping. Three drainage tunnels and a shaft with a small horizontal tunnel at the bottom were put into this slope to remove the

potential danger. This operation has been completely successful; regular measurements indicate that total seepage is about 0.03 m^3/s and that the silt transported by the water is minimal (Dolmage, 1960).

Erosion

Problems of **erosion** considered here are only those brought about by the wearing away and redeposition of unconsolidated materials by the action of water. These problems may be divided into those caused by fluvial erosion and those caused by marine erosion.

Fluvial Erosion. The errosive power of rivers, creeks, and surface runoff is obvious especially during periods of heavy precipitation and increased runoff flows. Rivers and creeks in addition to causing problems of flooding at these times, also undercut their banks causing collapse – in essence, landslides; a recent example was in December 1980 along Anderson Creek, south of Langley. In all the settled areas extensive use of drainage ditches has also been made in order to aid in removal of excess water in periods of heavy precipitation. These drainage ditches, especially along roads in upland areas, have created problems particularly where culverts under roads are too small (all too common). Channel erosion in these storm drainage ditches often causes undercutting of roads and streets and blocking of culverts (Gorman, 1974).

Marine Erosion. As the Fraser Lowland terminates at the sea (Strait of Georgia) geological hazards that are in part or entirely of marine origin are a fact that must be considered in the development of an area that borders the sea. The continuous movement of the sea water and its erosive power on the seacoast, especially during storms, and the cyclical effects of tides all must be considered when discussing the geological hazards of a coastal area.

The Strait of Georgia is a protected reach of the Pacific Ocean that lies between Vancouver Island and the British Columbia mainland, consequently the intensity of the storms within the strait is less severe than where the coast is open to the ocean proper. Also the waves are of lower magnitude. Nevertheless the storm waves, even within the strait, have considerable erosive power, especially where they come in contact with loose unconsolidated sediments exposed in cliffs or steep slopes. Three headlands which have cliffs and steep slopes consisting of unconsolidated sediments occur in the Fraser Lowland: the elongate Ocean Park headland which lies between Semiahmoo Bay and the Nicomekl-Serpentine lowland (Fig. 6, section 11); Point Grey headland of Burrard peninsula between the Fraser River delta and Burrard Inlet (Fig. 5, sections 5,6); and Point Roberts peninsula which in its Canadian portion exposes unconsolidated deposits in the Tsawwassen area (Fig. 6, section 9). All three headlands have glacial till at or very near the surface, overlying glaciofluvial and fluvial sediments. The profusion of boulders on most of the beaches surrounding these headlands must have been derived from the till as a result of storm erosion undercutting the cliffs and dropping the boulders and other material to the beach where the fines were transported by longshore currents to deeper waters.

The Ocean Park headland has been protected against marine erosion ever since the Burlington Northern railway was built. Slides, however, still occur along this headland (see section on *Landslides*). The main area of marine erosion in the Tsawwassen area in the past has been at English Bluff; the jetty constructed to the B.C. Ferries landing gives some protection to this area. Marine erosion is most active on the southeast point of Point Roberts in the United States where collapse of the cliff may be seen.

At present the Point Grey upland is the area most affected by marine erosion brought about by storm wave action and longshore currents. Also, as already described in the section on landslides, both surface runoff and groundwater add to the erosion problem of the headland. Many studies have been made of the erosion of this headland and the consensus of opinions is that it is receding about 15 to 30 cm per year (Carswell, 1955; Waslenchuk, 1973; Lum, 1975; McLean, 1975). In 1935 as a result of a major washout slide (see section on *Landslides*) large quantities of Quadra Sand were deposited on the north side of the headland in the area known as Towers beach (on the northern side of Point Grey). Longshore currents (**littoral** drift) constantly remove this sand eastward into the English Bay area. At considerable expense an attempt was made to maintain a good sand beach and protect the headland at Towers beach. In 1974 a 1000 m-long sand fill and cobble core **berm** and **groin** system was built to prevent marine erosion. The following winter the groin was only partly successful in protecting the cliff base; one half of the groin failed completely (McLean, 1975). The sand fill was severely eroded by west and northwest storm waves. Another berm and groin system of a different design, together with stabilization of the slope with better drainage and vegetation, was later put in place.

Volcanism

The major eruption of Mount St. Helens in southwestern Washington State, about 400 km south of the Fraser Lowland, on May 18, 1980 made all the residents of the Paific northwest very much aware of volcano geological hazards. The Mount St. Helens eruption exceeded 1 km^3 in volume (Foxworthy and Hill, 1982) and spread ash for hundreds of kilometres to the east and northeast. The prevailing winds in the Pacific coast area of North America are westerlies about 90 per cent of the time. If the Mount St. Helens eruption had occurred on May 13, 1980 the prevailing wind would have been from the southeast and the Fraser Lowland area would have been subjected to several centimetres of ash fall.

Mount St. Helens is one of a group of volcanoes, most of which are dormant, that stretch from northern California to southwestern British Columbia. The two nearest to the Fraser Lowland are Mount Baker, 40 km south-southeast of Chilliwack, and Mount Garibaldi, 60 km north of Vancouver.

Mount Baker (Crandell et al., 1979) probably attained its present size before the maximum advance of the Vashon glacier (Fraser Glaciation maximum), that is, prior to 18 000 years ago. A number of eruptions have occured in Holocene time, including one major eruption 8000 to 10 000 years ago, which consisted of lava flows, hot **pyroclastic flows**, and **mudflows**. Mount Baker last showed signs of activity from 1975 to 1977 with steam and gas rising from several vents. Most of the major eruptions of Mount Baker have consisted primarily of lava flows; no Mount Baker ash has been identified in the Quaternary sediments of the Fraser Lowland.

Mount Garibaldi in its present form dates from the period 11 000 to more than 25 000 years ago, most of it during the waning of the Fraser Glaciation (11 000-15 000 BP). Mathews (1975, p. 27-28) concluded "The mountain is presumed to have been built, like Mt. Pelee of today, as a broad cone surmounted by a slowly-rising dome shaped mass of sticky lava, from which avalanches of red hot lava fragments and accompanying swirling clouds of hot dust would periodically be discharged". No Garibaldi ash has been identified in the Quaternary sediments of the Fraser Lowland. Garibaldi volcanic rocks have been brought into the Fraser Lowland by glaciers and meltwater systems during Fraser Glaciation.

Mount Meager which lies about 200 km north-northwest of Vancouver underwent a major eruption about 2400 years ago. At that time the prevailing wind was a westerly and the wide plume of ash that resulted from the eruption is distributed as far east as the Alberta border. Apparently none of this ashfall reached the Fraser Lowland (Nasmith et al., 1967).

Two layers of volcanic ash have been identified in the Quaternary sediments of the Fraser Lowland. The most widespread is Mazama ash which is 6600 years old and which came from the Crater Lake area of southern Oregon. A much older ash whose source is unknown has been observed in two localities in Quaternary sediments greater than 60 000 years old – in a gravel pit on the eastern slope of the Surrey upland and in the Highbury tunnel.

No active or geologically young volcanoes occur within the Fraser Lowland. Volcanic rocks within the city of Vancouver underlie Little Mountain (Queen Elizabeth Park), part of the south slope bordering the False Creek area, and in the area from Prospect Point to Siwash Rock (Stanley Park). They are of Tertiary age and are from 17 to 34 million years old (R.L. Armstrong, personal communication, 1980). Similar volcanic rocks exposed on Sentinel Hill (West Vancouver), Grant Hill (east of Haney) and Silverdale Hill (west of Mission City) are also of similar age. None of these areas of volcanic rocks are in active volcanic areas and hence present no hazards.

Faults and Earthquakes

A fault is a rock fracture along which there has been displacement of the rock on one side with respect to the other side. This displacement during each episode of faulting normally varies from a few centimetres to a few metres. Many faults undergo repeated movements and the cumulative movement may amount to several hundred kilometres in the course of a fault's active geological history. An earthquake is a sudden movement or trembling in the earth caused by the abrupt release of slowly accumulated strain by faulting or volcanic activity.

Faults have been observed or deduced in many parts of the Fraser Lowland and adjoining mountains, but whether any of them are active is unknown, certainly no reliable evidence proves activity since the advent of the white settlers, although Blunden (1973) suggested the possibility of activity along the Burrard Inlet fault (see below). A major fault in Tertiary sedimentary rocks on the north side of Mount Burnaby possibly extends the full length of Burrard Inlet. Numerous small faults occur in the granitic and associated rocks underlying the slopes of the Coast Mountains. One of the best documented faults of this type is that which helped produce the Capilano River canyon. A large **graben** forms Sumas valley, having a cumulative downthrow in excess of 700 m. As most of the Fraser Lowland has thick deposits of unconsolidated sediments above the bedrock surface, one may only speculate whether any active faults underlie these deposits. The scarcity of **seismic epicentres** in this area since records have been kept seems to negate the possibility.

Vancouver and adjoining areas lie within the zone of earthquake activity that rims the Pacific. Most of the epicentres occur in the Strait of Georgia, Puget Sound, and on Vancouver Island, suggesting the possibility of active faults in these areas. If the earthquakes are intense, the vibrations resulting from them could cause damage in the Vancouver area, especially in areas underlain by saturated, fine grained Quaternary sediments. The map showing the seismic zones in Canada (Whitham and Hasegawa, 1975) includes much of the Fraser Lowland in zone 3, that is, a zone in which earthquakes are most likely to be expected. The National Building Code has incorporated this earthquake hazard potential in their regulations. If properly designed, there is no doubt that buildings can be made reasonably safe against all earthquake shocks normally to be expected in the area.

Although a great number of earthquakes are known to have occurred along the Pacific Coast of North America, only three of magnitudes of seven or more on the Richter scale have been recorded within 160 km of Vancouver. The **Ritcher scale** represents the range of numerical values of earthquake magnitude; a very small earthquake can have a negative value. In theory there is no upper limit to the magnitude of an earthquake; however, the strength of Earth materials produces an actual upper limit of slightly less than 9. On the Richter scale an increase in magnitude by one, for example from 5 to 6, means an increase in energy release by a factor of 10. An earthquake measuring 6 on the Richter scale would have 10 times the amplitude of an earthquake measuring 5. The actual damage in an area depends on many factors, such as magnitude, distance from the epicentre, and the foundation conditions. The term intensity is used to grade damage caused by an earthquake. The scale most widely used is the Modified Mercali scale, which is an arbitrary scale of earthquake intensity, ranging from one (detectable only instrumentally) to twelve (causing almost total destruction). Damage to ordinary man-built structures corresponds to an intensity of about 7 to 8. The Courtenay, Vancouver Island, earthquake of June 1946 was recorded as having an intensity of greater than 7 (Rogers and Hasegawa, 1978).

In areas of thick unconsolidated sediments earthquakes may cause as much or more damage by **liquefaction** of the sediments than damage caused by shaking. The Fraser River sediments and the Capilano and Fort Langley marine silts and fine sands and glaciomarine deposits that are saturated throughout much of the year would be susceptible to liquefaction during earthquakes. Most of the damage in the Anchorage, Alaska, earthquake in 1964 resulted from liquefaction of the sediments underlying the area, many of which were of marine origin (Hansen et al., 1966).

Hydrogeology

Surface Water

Most of the people (about one million) and industries in the Fraser Lowland obtain their water from the Greater Vancouver Water District, established in 1926. The region now served includes all the area north of the main arm of Fraser River from Grant Hill (Haney area) on the east to Horseshoe Bay on the west. South of the main arm of Fraser River the municipality of Delta obtains all its water from the Greater Vancouver Water District and the municipalities of Surrey and Langley part of theirs.

The Water District has complete control, including forbidding admittance, over the catchment areas of three small rivers flowing out of the Coast Mountains, namely, Capilano and Seymour rivers which flow into Burrard Inlet, and Coquitlam River which flows into the Fraser. The total catchment area is 58 500 hectares. The high precipitation in the Coast Mountains – normally in excess of 2500 mm per year – ensures a good runoff which is stored for use in reservoirs created by dams on these rivers. The water comes from undisturbed areas underlain almost entirely by plutonic and metamorphic rocks, consequently it is of outstanding quality, the **hardness** rarely exceeding 10 ppm and total dissolved solids 23 ppm, so that chlorination is the only treatment required. Legget (1973, p. 161) stated: "This wonderful water supply, is really fortuitous, since the city was founded not as a result of any careful city planning but in connection with the terminus of the Canadian Pacific Railway on Canada's west coast. There are few major areas

throughout the world that are so fortunate as to have a gravity supply of pure water within 16 km of the civic center."

Except for the municipality of Mission, most of the remainder of the Fraser Lowland depends on groundwater for domestic water supply needs.

Groundwater

Groundwater, or subsurface water, is the water that supplies springs and wells. The finding of potable groundwater has long been of profound importance to man. In arid and semi-arid regions the presence and development of groundwater has been a major factor in the growth or absence of civilizations. Only within the relatively recent past have the people living in humid regions come to realize what an important natural resource exists beneath the Earth's surface in the form of groundwater, especially in those areas of great concentration of population where surface streams are insufficient or contaminated. In other areas, such as the Fraser Lowland where the annual rainfall, although copious, is insufficient during the growing season (see section on *Climate*), groundwater has become an important source of water for irrigation and domestic purposes. Even where large surface supplies are available, it is commonly more economical, when good engineering practices are used, to allow the natural conduits in the rocks and unconsolidated sediments beneath the Earth's surface to carry water to the user than to construct large, long pipelines or aqueducts. The amount of water available in storage in the groundwater reservoirs (**aquifers**) and the annual recharge of these reservoirs, however, are important factors to be considered before undertaking programs of groundwater development.

Source. The source of all groundwater is ultimately precipitation that falls as rain or snow primarily on the immediate or adjacent area. The annual precipitation in the Fraser Lowland, which normally exceeds 1250 mm, provides an abundance of water to recharge the groundwater reservoirs. Some of the precipitation, after wetting the vegetation and ground, runs off the surface to drains and streams. Of the precipitation that infiltrates the **pedological soil**, part is absorbed by plant roots and part is lost in evaporation. The remainder percolates downward to groundwater reservoirs. Such factors as the permeability of the topsoil and underlying unconsolidated sediments, amount and intensity of the precipitation, slope of the land surface, and temperature determine the amount of water that eventually reaches aquifers.

Occurrence. Groundwater occurs in interstices in the subsurface geological materials (unconsolidated materials and rock). In the Fraser Lowland the principal aquifers are found in the Quaternary unconsolidated sediments, which are more than 300 m thick in places. Groundwater occurring in bedrock fractures is of secondary importance and is utilized only in a few areas, for example on Sumas Mountain and Grant Hill.

Groundwater occurring in permeable gravel and sand, forming the glaciofluvial and some of the fluvial and slope deposits in the Fraser Lowland, is free to move under the influence of gravity or **water table** slopes. The groundwater contained within them feeds springs and wells. Clays and silts, stony and stoneless, which make up the major part of the glaciomarine, marine, and glaciolacustrine sediments and part of the fluvial and lacustrine sediments, are poor source materials for groundwater because they are impermeable or only slightly permeable. Most of the tills also have low permeability and consequently are not good sources of groundwater. Hundreds of dug wells are situated in the impervious materials referred to above. They act as reservoirs in which to store surface water.

Reservoirs. Two main types of groundwater reservoirs (aquifers) occur in the Fraser Lowland, namely, free and confined reservoirs. Water percolates downward from the surface until a zone of saturation is reached in which all the interstices in the sediments are filled with water. Free groundwater is the water in this zone of saturation down to the first impervious barrier. Confined groundwater is under pressure, separated from free groundwater above by an impervious barrier. Free groundwater reservoirs may be perched in that they are separated from the underlying main body of groundwater by a zone of nearly impervious sediments such as clay, stony clay, or lodgment till.

Free groundwater reservoirs provide a major portion of the groundwater supply that has been developed in the area east of the Nicomekl-Serpentine lowland. The largest reservoirs are found in Sumas glaciofluvial deposits (Armstrong, 1980a,b; Armstrong and Hicock, 1980a,b). Other deposits that contain unconfined groundwater reservoirs include Fraser River sediments and gravel and sand deposits of smaller rivers, such as the Chilliwack. In a few localities Fort Langley glaciofluvial deposits occur at the land surface and contain free groundwater reservoirs, the largest of which occurs about 5 km southeast of Fort Langley in an area transected by the Trans Canada Highway.

Confined groundwater reservoirs are extensively utilized in the following areas (see section on *Subsurface Geology*): (1) upland areas in which Vashon till is at or near the surface; (2) upland areas in which Capilano and Fort Langley glaciomarine and marine sediments are at or near the surface; (3) upland areas in which Sumas till is at or near surface; (4) flat-lying lowland areas in which Capilano and Fort Langley marine and glaciomarine sediments are at the surface; and (5) flat-lying lowland areas in which Fraser River and Salish fine grained fluvial and lacustrine sediments are at the surface. In all these areas the imperviousness of the surface deposits prevents the establishment of free groundwater reservoirs. Abundant groundwater, however, occurs in permeable subsurface geologic units; most is obtained from the following lithologic units: Sumas, Fort Langley, Vashon, and pre-Vashon glaciofluvial and proglacial deposits. Lesser quantities of confined groundwater are obtained from sand and silty sand beds interbedded with impervious silt and clay; included here are such beds in the Fort Langley and Capilano glaciomarine and marine sediments and in the Salish and Fraser River sediments. Also some confined water is obtained from the nonglacial Cowichan Head and older lithologic units.

Sewage Disposal

Sewage disposal by major sewer systems is not within the domain of this report, but rather we are concerned here with domestic sewage disposal by means of septic tanks, outhouses, and open sewage ditches, and of farmyard sewage that is stockpiled on the ground or used as fertilizer. In all these examples the untreated or partly treated sewage enters the geological materials that underlie the land surface. In areas where groundwater is used, especially from unconfined, near surface aquifers, pollution of the water may be caused by improperly handled sewage. E.C. Halstead (personal communication, 1955-1983) in his groundwater studies in the Fraser Lowland has pinpointed the source of such water pollution in numerous places.

In all cases of sewage disposal in which the sewage enters the geological material, a knowledge of the drainage and subsurface geology is essential. The drainage properties

of surface and subsurface materials are summarized in Table 6. Many of the upland areas have impervious or nearly impervious sediments at or within a few metres of the land surface. The reader is referred to the surficial geology maps of the Fraser Lowland (Armstrong, 1980a,b; Armstrong and Hicock, 1980a,b) to determine the material and then to Table 6 for drainage characteristics. For example, if Vashon lodgment till or Fort Langley glaciomarine stony silty clay loam is the unit mapped at the surface, refer to the same materials in Table 6 where the drainage properties are stated as mainly surface drainage. For all practical purposes the materials listed as having primarily surface drainage permit little or no downward percolation movement. It is therefore evident that much of the overflow from septic tank **absorption fields** must eventually drain down the slopes by surface or near surface runoff. If the area has poorly drained hollows, as do much of the glaciomarine uplands, this septic tank overflow and flow from farmyard sewage is likely to concentrate in these depressions. If septic tanks must be used under these unfavourable conditions, they should have adequately designed absorption fields and be placed sufficiently far apart so that development of adjacent lots will not be affected. I have seen cases in the past (now corrected) on sloping ground where the flushing of a toilet in a home upslope will bring contaminated water to the surface in the downslope lot.

Many of the upland areas that do not have impervious materials at or near the surface are underlain by very permeable glaciofluvial sand and gravel. In most of these areas domestic water supply is obtained from near surface (3-6 m) unconfined aquifers. Consequently great care must be taken to see that septic tank overflow and farmyard sewage do not pollute the water supply. I recall a case in the late 1950s where a farmer's water supply had become contaminated and was condemned. His domestic water supply came from a spring at the base of a gravel terrace about 10 m high. Throughout the winter he had stockpiled barnyard manure on this terrace surface as he planned to use the manure as fertilizer during spring ploughing. During the winter the **leachates** from it had contaminated his water supply. For a new water supply he had to drill a well to a confined aquifer.

Septic tank sewage disposal systems, open sewage ditches, and outhouses may all be sources of pollution in areas where the groundwater level is up to or nearly up to the absorption tile or where the sewage ditches are below the groundwater surface. They will also be unsatisfactory in areas subjected to periodic flooding, such as in the valley of Fraser River, the delta of the Fraser, Nicomekl-Serpentine valley, and Sumas valley, especially during the rainy winter and spring flood seasons.

Agricultural Applications

Agricultural Soils

All the soils[1] in the Fraser Lowland have developed from Quaternary unconsolidated sediments. The agrologist uses the term parent materials to refer to these geological materials from which soils develop. The kind of soil that forms is governed by the nature of the geological material, climate, topography, time, drainage, vegetation. Parent material and microtopography (for example slope) are elements of the overall geological environment.

The regional **physiography** (as described in a previous section) has developed as a result of a geological and geomorphological history that encompasses tens of millions of years. The glaciations of the last million plus years have played a major role in modelling the final landscape. The end result has been the development of the triangle-shaped Fraser Lowland with its own unique topographic setting, which consists of a relatively low-lying area bounded by the sea on the western side and high mountains on the other two sides. This physical environment has resulted in a relatively mild, climate which plays a major role in the development of the soils. Also, the present Fraser Lowland is very young geologically and was covered by glacier ice or the sea up until 11 000 to 13 000 years ago. Much of the Fraser River floodplain, delta, and surface material may only be tens of years old (pre-dykes). Consequently the soils throughout the Fraser Lowland are very young when compared to areas that have not been glaciated during the Quaternary. In all the soils the **parent materials** from which they were derived are easily recognized, that is the soil forming processes, which change the parent materials into soil, are only partly completed. A knowledge of the geology, therefore, is essential and helpful in mapping of soils and understanding their origin.

The stratigraphy in and below a soil may be an important factor in its development. This is illustrated by the variety of soils on the same parent material. In many places the variation in the soil development results from changes in the nature of the geological materials underlying the parent material from which the soil has developed; for example, these underlying materials may vary from pervious to impervious. The drainage pattern within the soil and parent material changes with these variations, thus changing the development pattern of the soils. In some places the soil develops on two parent materials; the parent material at the surface may be only a fraction of a metre thick, whereas normally the soil is almost 1 m thick.

Drainage, which is an important factor in the development of soil, is a function of the total geological environment plus climate; this includes permeability of the parent material, slope, and absence or presence of a near surface permanent groundwater table. The drainage of a region is made up of subsurface (groundwater) drainage and surface drainage. The groundwater drainage may vary from rapid, as in the case of a very pervious Sumas gravel, to relatively slow, for example on Fort Langley silty sand. Of course if the groundwater table is at or near the land surface, groundwater drainage may not be able to handle excess precipitaion even in permeable sediments such as the Salish lacustrine sands in Sumas valley. Soil developed from impervious parent material is dependent on surface drainage, which may be reasonably good as in areas of Vashon till, where the slope is sufficient to allow runoff, to very poor where no appreciable slope exists, for example the Nicomekl-Serpentine lowland where Capilano silt, silt loam, clayey silt loam, silty clay, and Salish organic and floodplain deposits occur at the surface. In some areas where the microtopography consists of hummocks and closed depressions, the former will have good surface drainage and the latter will act as water collection basins; this is the case for much of the area underlain by Fort Langley glaciomarine sediment.

Most pedologists who have worked in the Fraser Lowland are fully cognizant of the important role geology plays in their investigations, and their reports reflect this fact and contain sections on the origin of the parent materials.

Soil Surveys. Soil scientists of the British Columbia Department of Agriculture mapped and studied the soils in the Fraser Lowland (Holland et al., 1957; Sprout and Kelley, 1961; Comar et al., 1962; Comar and Kelley, 1962; Runka and Kelley, 1964; Luttmerding and Sprout, 1966, 1967, 1968, 1969, 1972). In a final report, 147 types of classified soil, parent material, and drainage are given (Luttmerding, 1981); parent materials are listed by their composition and do not include the stratigraphic names cited

[1] Throughout this section on agricultural applications, the term 'soil' refers to agricultural or pedological soil or, in the vernacular of many nonscientists, to topsoil.

in the surficial geology maps of the area (Armstrong, 1956, 1957, 1960a,b, 1980a,b; Armstrong and Hicock, 1980a,b). The classified soils can be put into a stratigraphic framework by using the soils maps in conjunction with the surficial geology maps.

The 147 classified soil units have been grouped into 5 classes according to their arability. This arability rating was used to determine in part the tax assessment against the land and it was also one of the factors used to decide whether land should be classed as argicultural and not made available for other development (British Columbia Land Use Act).

Agricultural Drainage

Agricultural drainage is discussed in the preliminary soil reports referred to in the preceding section; the general conclusions are summarized here because the same conditions exist in housing and industrial development areas in the Fraser Lowland.

The greater part of the flat-lying lowland areas and all the upland areas which have lodgment tills and glaciomarine sediments at the surface present major drainage problems to agriculturists and others. Adequate drainage is necessary for satisfactory crop production; poor drainage, substantially reducing crop yields, occurs in much of the Fraser Lowland as outlined above.

Farmers suffer financial losses due to poor drainage or flooding, which kill crops or reduce yields. Poor drainage restricts root growth, in turn reducing plant vigour because the root system is not sufficient to supply the requirements of above-ground growth. Poor seed germination, uneven maturity, and poor quality all result from high water tables; soil aeration and nitrogen availability are also reduced. Calcium, nitrogen and perhaps other plant nutrients are leached from the surface by fluctuations of the water table.

The Fraser River floodplain and delta are dyked against flooding but during higher than average runoff, areas inside the dykes are flooded by seepage under and through the dykes. During periods of heavy precipitation, ponding normally occurs due to the flatness of the land surface and near impervious nature of the soils and their parent materials. Very low angle gradients, less than 1%, and consequent very slow water flowage is typical of the tributary streams draining the floodplain. During heavy runoff or rainfall they cannot contain the flow and spill over their banks. Inner margins of the floodplain and delta are also subject to seepage from the adjoining uplands. This seepage may continue throughout the wet season and bring about long periods of saturation for the lowland soils.

Luttmerding and Sprout (1966, p. 9) stated: "Although several factors contribute to the poor drainage conditions on much of the Fraser River floodplain, the problem can be greatly reduced by extension and strengthening of the dyking system, improvement and extension of drainage ditches and pumping facilities, and greater use of tile drains. It was noticed during the course of the survey that the efficiency of many ditches was impaired through blockage by vegetation and debris. More attention should be directed to keeping ditches clean."

Large parts of Nicomekl-Serpentine and Sumas valleys also suffer from poor drainage. Once again the problem is caused by the flatness of the land surface and the almost impervious materials from which the soils are formed. Very slow infiltration rates are unable to cope with heavy precipitation and runoff from the adjoining uplands, resulting in ponding and saturated topsoil conditions. Luttmerding and Sprout's remarks apply equally in these areas.

The upland areas of the Fraser Lowland do not suffer from poor drainage to the same extent as the flat-lying lowlands. Where soils form on glaciofluvial deposits the excellent drainage conditions may result in excessive drying in the growing season. Soils developed on lodgment tills and glaciomarine deposits are largely dependent on surface drainage and in most of the areas where this is the case, the gradient of the slope is high enough to prevent a drainage problem. Both these materials, however, may have hummocky surfaces with enclosed depressions; this is especially true if the area is underlain by glaciomarine sediments. In these cases water collects in the depressions throughout the wet season. Some of these depressions may be drained by installation of an open ditch or a properly designed tile system. Some depressions have been deepened and used for water storage for livestock and for limited irrigation.

Land Levelling and Landscape Architecture

In the flat-bottomed lowlands only a minor amount of land levelling is needed. It is normally undertaken to eliminate wet spots in order to establish more uniform growing conditions. Upon completion of the levelling a satisfactory drainage system should be installed. As the flat-lying lowland areas have poorly developed, relatively thin soils great care should be taken to preserve them. Luttmerding and Sprout (1966) recommended that the soil should be removed and stockpiled before proceeding with levelling and installation of drains in the parent materials and then replaced upon completion.

Great care also should be taken when levelling upland soils. As on the lowlands, the soil should be removed, the land levelled, and the soil replaced. Initially, this method may be more expensive, but, in the long run, will prove to be more economical than filling depressions with the soil and exposing the parent materials on the knolls and ridges. The parent materials, sterile and commonly impervious, will require incorporation of substantial amounts of organic matter and chemical and organic fertilizer before satisfactory crop growth is regained. Where the parent material is coarse, numerous stones are exposed and waterholding capacity greatly reduced.

The same practice should also be followed in landscape architecture. In the past many contracts for landscaping have specified the use of soil without differentiating between the engineer's soil and the pedologist's soil. As a result unconsolidated materials from excavations below the agricultural soil have been used as the material in which it was planned to develop a garden. In places this has produced disastrous results brought about primarily by the sterility and impermeability of the material. For example, in the condominium development in which I live, the landscaping as undertaken by the developer consisted of levelling and shaping the nearly impervious Capilano glaciomarine silty clay and Vashon sandy loamy lodgment till that had been excavated for the buildings. Drains were installed in the reshaped Capilano and Vashon sediment. This material was then covered by a thin mantle, >20 to 40 cm, of soil (organic material) obtained from a bog; seeding and planting were then carried out. Within a year many of the plants died and it became obvious that the drains were not working; consequently new ones were installed and additional topsoil provided. The extra cost amounted to thousands of dollars. The same procedure has been common in the past in Vancouver; for example, the playing fields at Empire and Swanguard stadiums had to be rebuilt because the drainage systems were installed in impervious material used as a base for the fields and the surface water could not reach the drains.

Agricultural Peat

Some of the largest peat operations in Canada are in the Fraser Lowland. The production in 1954, the last year for which a figure is available, was in excess of 45 000 tonnes with a value of about two million dollars; the present production certainly has a much higher value in inflated dollars. Most of the peat is processed for use as agricultural peat and the bulk is shipped to the United States.

The locations of all peat bogs are shown on the surficial geology maps of the Fraser Lowland (Armstrong, 1980a,b; Armstrong and Hicock, 1980a,b). Those from which peat moss are being or have been produced on a major scale are: (1) Pitt Meadows bog southeast of Pitt River bridge, (2) Byrne road bog, along southeast Marine Drive, Burnaby, (3) small Lulu Island bog in Richmond, and (4) Delta or Burns bog in Delta municipality.

The Pitt Meadows bog is up to 8 m thick and covers about 400 ha, part of which is under cultivation. The Byrne road bog covers more than 600 ha, of which more than one half is under cultivation; the peat is from less than 1 m to 5 m thick. The small Lulu Island bog covers about 1400 ha, of which only about 100 ha is under cultivation. Much of the peat in this bog, which is from 1 to 7 m thick, has been badly burnt – fires are common in the bogs in the dry summers. The Delta or Burns bog extends over an area in excess of 4500 ha, the margins of which are under cultivation; however much of this bog has been damaged by fire. The peat varies in thickness from less than 1 m to 8 m. These bogs and others have very acid topsoils; however they provide large areas in which blueberries and cranberries are grown.

All the peat produced from these bogs is a sphagnum moss peat. The stratum of moss of high quality varies greatly in thickness; in some places it is as much as 2.15 m thick, but averages nearer 1.22 m. The top layer is referred to as unhumified peat. This is dead sphagnum moss only slightly decomposed. It is fibrous, elastic, light greyish green, or yellowish to light brown, becoming somewhat darker on drying. It has an absorptive value of up to 25 times its own weight of water and is light in weight and porous. This undecomposed peat grades down into and is interstratified with humified peat. Humified peat in its natural state is dark brown to black, colloidal, plastic, homogeneous, and somewhat elastic. It dries into a hard solid mass with specific gravity higher than water. It has almost no absorptive value. A piece of dried humified peat may be under water for weeks without absorbing any water. Unhumified peat left in its natural state will humify (see **humification**) in the course of time and all fibrous matter eventually disappears.

SUMMARY

When planning efficient land use in the Fraser Lowland, climate is one of the attributes of the region that is of prime importance. The range and pattern of precipitation and, to a much lesser extent, temperature have many effects on the geological materials that occur at the land surface. Precipitation which enters the drainage system affects the use of the land and temperature plays an important role in agriculture. The Fraser Lowland has an inshore marine climate, which is relatively mild with heavy winter rains, much drier summers, and year round temperatures ranging from about a mean of 2°C in January to a mean of 20°C in July. The bordering mountains protect the area in the winter from cold air masses east of the mountains and the sea has a year round moderating influence.

The drainage of the Fraser Lowland is of two types, namely, surface and subsurface drainage. Table 6 summarizes the drainage characteristics of all the surficial geological units.

The surficial geology maps of the Fraser Lowland (Armstrong, 1980a,b; Armstrong and Hicock, 1980a,b) show the two dimensional nature of the geological environment; Tables 2,3, and 4 plus the stratigraphic sections shown in Figures 5-16 are an attempt to show the third dimension. One may conclude from a study of them that the surficial geology is extremely complex and that subsurface conditions can change over short distances consequently detailed site investigations are recommended in most of the Fraser Lowland. The surficial geology maps also show areas of exposed bedrock and in the case of Vancouver city the depth to bedrock.

The engineering applications of the Quaternary geology are treated in considerable detail in this report. For example Table 6 classifies all the foundation materials likely to be encountered in the foundations of structures under the headings: lithologic unit, bearing capacity, workability, and drainage. These properties need not be repeated here. Some of the materials that have their own particular problems making them rather poor foundation materials are: peat and organic sediments, glaciomarine and marine sediments, loosely compacted postglacial sand and silt, and landfills. Examples are given in the text of problems encountered in these materials.

Metropolitan Vancouver has been fortunate in having an abundance of low-priced sand and gravel near the city. As the population of the area has grown, however, depletion of the supply has accelerated, both by increased consumption and by reduced availability through zoning regulations. Without good planning, these supplies will become increasingly more costly. It is in the common interest that the best use of these resources be made.

The subsurface geology of an area should be thoroughly understood whenever sewage disposal depends on the properties of the geological materials for disposal of the leachates from septic tanks, outhouses, sewage ditches, and barnyard sewage. Whenever these are in contact with a water table they are a source of pollution. Impervious sediments allow no downward drainage. Pervious sediments from which a water supply is obtained should not be used for the disposal of these leachates.

In land use planning and development of the Fraser Lowland and lower slopes of the adjoining mountains the probability of land and structural damage with resultant loss of money, and in extreme cases, loss of life, may result from ignoring the problems present in areas of hazardous geological conditions.

The climate, physical features, and geology of the Fraser Lowland and adjoining mountainous areas make floods inevitable under natural conditions. Two major types of floods have been common in the past: (1) those caused by spring runoff, particularly along the Fraser River, and (2) those caused mainly in autumn and winter by greatly increased flows of mountain and lowland rivers and streams crossing the Fraser Lowland. The commonest floods are in the floodplain areas of Fraser River, its delta before dyking, and in Nicomekl-Serpentine and Sumas valleys. Much of these areas is underlain by impervious sediments; they have high water tables and low drainage gradients and without man-made aids cannot handle excess winter precipitation. In future planning they should be reserved whenever possible for agriculture. All the streams flowing out of the mountains can go on a flooding rampage; where they flow through unconsolidated deposits no construction should be permitted near their banks or in old channels and the vegetation cover should be maintained in the catchment areas.

Landslides are indigenous to most of the cliff-like or very steep slopes found in the Fraser Lowland and on the lower slopes of the adjoining mountains. They may be caused

by a variety of conditions, such as excessive precipitation coming into contact with loosely consolidated or supersaturated surficial materials such as sand, silt, and silty clay on unstable slopes. In this report areas have been outlined in which development should not be permitted or permitted only under strict control assuring the stability of the slope, primarily by diverting the drainage.

Marine erosion on exposed cliffs, such as Point Grey, may present problems. The cliffs should be protected or the rate of erosion calculated and allowed for if construction is to take place at the top of the cliffs.

Although Mounts Garibaldi and Baker – active volcanoes in the past 12 000 years – may be seen from Vancouver, the possibility of renewed activity in them would present minimal danger to the Fraser Lowland as the prevailing winds are westerlies.

The Fraser Lowland lies within seismic zone 3, that is an area most likely subject to earthquakes; however, most epicentres appear to be in the Strait of Georgia and on Vancouver Island. If future major earthquakes occurred in the above areas, the intensity of the shock in the Vancouver area could cause some damage, however it is unlikely the damage would be major; for example, a major earthquake in excess of 7 on the Richter scale near Courtenay had little effect on Vancouver. If an earthquake occurred in the Fraser Lowland, the damage would depend on the intensity. The liquefaction of marine sediments would probably bring about the most damage. All major buildings can be made reasonably safe against earthquake shock if properly designed.

Groundwater is extensively used in a large part of the Fraser Lowland. Only an outline of the groundwater resources are included in this report; Halstead (1957, 1959, 1961) should be consulted for detailed information. The availability of adequate groundwater supplies may provide a considerale saving in cost of irrigation or in the supplying of domestic and industrial water. Piping surface water by long mains may be a much more expensive source of water.

In mapping pedological soils a knowledge of the subsurface geology and drainage of the parent materials is necessary. The surficial geology maps show the close relation between pedological soil types and underlying parent materials. The pedological soils in the Fraser Lowland are all relatively shallow and easily removed by land levelling and excavation.

SELECTED BIBLIOGRAPHY

Ahmad, N.
1955: Investigation of some physical and chemical properties of the stony clays in the lower Fraser Valley area of British Columbia; unpublished B.S.A. thesis, Soils Sciences Department, University of British Columbia, Vancouver.

Armstrong, J.E.
1953: Vancouver North, British Columbia; Geological Survey of Canada, Paper 53-28, preliminary map, scale 1 inch to 1 mile.

1956: Surficial geology of Vancouver area, British Columbia; Geological Survey of Canada, Paper 55-40, map, scale 1 inch to 1 mile.

1957: Surficial geology of New Westminster map-area, British Columbia; Geological Survey of Canada, Paper 57-5, map 16-1957, scale 1 inch to 1 mile.

1960a: Surficial geology, Chilliwack (west half), British Columbia; Geological Survey of Canada, Map 53-1959, scale 1 inch to 1 mile.

Armstrong, J.E. (cont.)
1960b: Surficial geology of Sumas map-area, British Columbia; Geological Survey of Canada, Paper 59-9, 27 p., Map 44-1959, scale 1 inch to 1 mile.

1961: Soils of the coastal area of southwest British Columbia; in Soils in Canada, ed. R.F. Legget; The Royal Society of Canada, Special Publications, No. 3, p. 22-32.

1965: Days 10, 12, and 13; in Guidebook of Field Conference J Pacific Northwest; INQUA, 7th Congress, (Denver); Nebraska Academy of Science, p. 80-86, 102-108.

1975a: Quaternary geology, stratigraphic studies, and revaluation of terrain inventory maps, Fraser Lowland, British Columbia; in Report of Activities, Part A, Geological Survey of Canada, Paper 75-1A, p. 377-380.

1975b: Days 7 and 8; in The Last Glaciation, ed. D.J. Easterbrook; International Geological Correlation Program, Guidebook for field conference; Western Washington State College, p. 74-97.

1977: Quaternary stratigraphy of the Fraser Lowland; Geological Society of America, Annual Meeting (Seattle), Guidebook for field trip no. 6, p. 204-226; Geological Association of Canada, Cordilleran Section, Guidebook no. 10.

1980a: Surficial geology, Mission, British Columbia; Geological Survey of Canada, Map 1485A, scale 1:50 000.

1980b: Surficial geology, Chilliwack, British Columbia; Geological Survey of Canada, Map 1487A, scale 1:50 000.

1981: Post-Vashon Wisconsin Glaciation, Fraser Lowland, British Columbia; Geological Survey of Canada, Bulletin 322.

Armstrong, J.E. and Brown, W.L.
1953: Ground-water resources of Surrey Municipality, British Columbia; Geological Survey of Canada, Water Supply Paper no. 322.

1954: Late Wisconsin marine drift and associated sediments of the lower Fraser Valley, British Columbia, Canada; Geological Society of America, Bulletin, v. 65, p. 349-364.

Armstrong, J.E. and Clague, J.J.
1977: Two major Wisconsin lithostratigraphic units in southwestern British Columbia; Canadian Journal of Earth Sciences; v. 74, no. 7, p. 1471-1481.

Armstrong, J.E. and Hicock, S.R.
1975: Quaternary landscapes: present and past – at Mary Hill, Coquitlam, British Columbia; in Report of Activities, Part B, Geological Survey of Canada, Paper 75-1B, p. 99-103.

1976: Quaternary multiple valley development of the lower Coquitlam valley, Coquitlam; in Report of Activities, Part B, Geological Survey of Canada, Paper 76-1B, p. 197-200.

1980a: Surficial geology, New Westminster, British Columbia; Geological Survey of Canada, Map 1484A, scale 1:50 000.

1980b: Surficial geology, Vancouver, British Columbia; Geological Survey of Canada, Map 1486A, scale 1:50 000.

Armstrong, J.E. and Roddick, J.A.
1965: Geology, Vancouver North, British Columbia; Geological Survey of Canada, Map 1152A, scale 1 inch to 1 mile.

Armstrong, J.E., Crandell, D.R., Easterbrook, D.J., and Noble, J.B.
1965: Late Pleistocene stratigraphy and chronology in southwestern British Columbia and northwestern Washington; Geological Society of America, Bulletin, v. 76, p. 321-330.

Armstrong, J.E., Mathews, W.H., and Sinclair, A.J.
1971: Use of trend surfaces in till fabric analysis: Discussion; Canadian Journal of Earth Sciences, v. 8, p. 1163-1167.

Ashley, G.M.
1977: Sedimentology of a tidal river, Pitt River, British Columbia; unpublished Ph.D. thesis, University of British Columbia, Vancouver.

1979: Sedimentology of a tidal lake, Pitt Lake, British Columbia; in Moraines and Varves, Origin, Genesis and Classification, ed. Ch. Schluchter; A.A. Balkema, Rotterdam, p. 327-345.

Balzarini, M.A.
1981: Paleoecology of Everson age glacial marine drifts in northwestern Washington and southwestern British Columbia; unpublished M.Sc. thesis, University of Washington, Seattle, U.S.A.

Barker, M.L.
1974: Water resources and related land uses Strait of Georgia – Puget Sound Basin; Environment Canada, Geographical Paper 56.

Blunden, R.H.
1971: Vancouver's downtown (Coal) peninsula urban geology; unpublished B.Sc. thesis, Department of Geology, University of British Columbia, Vancouver.

1973: Urban geology of Richmond, British Columbia; Department of Geology, Univeristy of British Columbia, Report No. 15.

1975: Historical geology of the lower Fraser River valley; University of British Columbia, Adventures in Earth Science Series, No. 3.

Boyle, H.C.
1973: The Recent geology of the Queensborough District, city of New Westminster; unpublished B.A.Sc. thesis, Department of Geology, University of British Columbia, Vancouver.

British Columbia Department of Agriculture
1916-1976: Climate of British Columbia; British Columbia Department of Agriculture, Victoria, Annual Reports.

British Columbia Department of Mines and Petroleum Resources
1974: Geology, exploration and mining in British Columbia, 1973; British Columbia Department of Mines and Petroleum Resources, p. 542.

1975: Geology, exploration and mining in British Columbia, 1974; British Columbia Department of Mines and Petroleum Resources, p. 376-379.

Brown, W.L.
1983: Hydrologeology in the Highbury Street tunnel, Vancouver, B.C.; Geological Association of Canada, Annual Meeting, Program with Abstracts, v. 8, p. A8.

Bustin, R.M. and Mathews, W.H.
1979: Selective weathering of granite clasts; Canadian Journal of Earth Sciences, v. 16, no. 2, p. 215-223.

Carswell, H.T.
1955: Groundwater and related erosion of Point Grey; unpublished B.A. thesis, Department of Geology, University of British Columbia, Vancouver.

Chapman, D.
1952: The climate of British Columbia; Transactions, Fifth British Columbia Natural Resources Conference (Victoria), p. 8-37.

Childs, E.C.
1969: An Introduction to the Physical Basis of Soil Water Phenomena; John Wiley & Sons Ltd., London, 493 p.

Clague, J.J.
1976: Quadra Sand and its relation to the late Wisconsin glaciation of southwest British Columbia; Canadian Journal of Earth Sciences, v. 13, p. 803-815.

1977: Quadra Sand: a study of late Pleistocene geology and geomorphic history of coastal southwest British Columbia; Geological Survey of Canada, Paper 77-17, 24 p.

1980: Late Quaternary geology and geochronology of British Columbia. Part 1: radiocarbon dates; Geological Survey of Canada, Paper 80-13.

1981: Late Quaternary geology and geochronology of British Columbia. Part 2: summary and discussion of radiocarbon-dated Quaternary history; Geological Survey of Canada, Paper 80-35.

Clague, J.J. and Luternauer, J.
1982: Late Quaternary sedimentary environments, southwestern British Columbia; International Association of Sedimentologists, Eleventh International Congress (Hamilton), Field excursion 30A guidebook.

1983: Late Quaternary geology of southwestern British Columbia; Geological Association of Canada, Field trip guidebook no. 10.

Clague, J.J., Armstrong, J.E., and Mathews, W.H.
1980: Advance of the late Wisconsin Cordilleran Ice Sheet in southern British Columbia since 22,000 B.P.; Quaternary Research, v. 13, p. 322-326.

Comar, V.K. and Kelley, C.C.
1962: Soil survey of Sumas Municipality; British Columbia Department of Agriculture, Preliminary Report No. 5, scale 1:24 000.

Comar, V.K., Sprout, P.N., and Kelley, C.C.
1962: Soil survey of Chilliwack map-area; British Columbia Department of Agriculture, Preliminary Report No. 4, scale 1:24 000.

Crandell, D.R., Mullineaux, D.R., and Miller, C.D.
1979: Volcanic-hazards studies in the Cascade Range of the western United States; in Volcanic Activity and Human Ecology, ed. P.D. Sheets and D.K. Grayson; Academic Press, New York, p. 195-218.

Dolmage, V.
1960: Engineering geology, North Vancouver; in Guidebook for geological field trips in southwestern British Columbia; Geological Society of America, Cordilleran Section, p. 26-32.

Draycot, W.M.
1951: The Pleistocene, or Ice Age, of southwest British Columbia (Part 2); Art History and Science Society, Vancouver Museum and Art Notes, Series 2, v. 2, no. 1, p. 14-22.

Dreimanis, A.
1976: Tills: their origin and properties; in Glacial Till, ed. R.F. Legget; Royal Society of Canada, Special Publication 12, p. 11-49.

Easterbrook, D.J.
1963a: Late Pleistocene glacial events and relative sea-level changes in the northern Puget Lowland, Washington; Geological Society of America Bulletin, v. 74, p. 1465-1484.

1963b: Glaciomarine environments and the Fraser Glaciation in northwestern Washington; Friends of Pleistocene, Western Washington State College (Bellingham), Guidebook for first annual field conference, Pacific Coast Section.

1964: Void ratios and bulk densities as a means of identifying Pleistocene tills; Geological Society of America Bulletin, v. 75, p. 745-750.

1969: Pleistocene chronology of Puget Lowland and San Juan Islands, Washington; Geological Society of America Bulletin, v. 80, p. 2273-2286.

Easterbrook, D.J., Crandell, D.R., and Leopold, E.G.
1967: Pre-Olympia stratigraphy and chronology in the central Puget Lowland, Washington; Geological Society of America Bulletin, v. 78, p. 13-20.

Eisbacher, G.H.
1973: Vancouver geology, a short guide; Geological Association of Canada Cordilleran Section, Special Publication.

Eisbacher, G.H. and Clague, J.J.
1981: Urban landslides in the vicinity of Vancouver, British Columbia, with special reference to the December 1979 rainstorm; Canadian Geotechnical Journal, v. 18, no. 2, p. 205-216.

Finn, W.D. Liam, Byrne, P.M., Spence, R.A., and Emery, J.J.
1971: Seismic stability of the Fort Camp seacliffs; Proceedings of the first Canadian conference on earthquake engineering, University of British Columbia, Vancouver.

Flint, R.F.
1971: Glacial and Quaternary Geology; John Wiley and Sons Inc., New York, 892 p.

Forestry Soils Committee of the Douglas-Fir Region
1957: An Introduction to Douglas-Fir Region of the Pacific Northwest; Western Forestry and Cosnervation Association, 712 U.S. National Bank Building, Portland, Oregon.

Foxworthy, B.L. and Hill, M.
1982: Volcanic eruptions at Mount St. Helens, the first 100 days; United States Geological Survey, Professional Paper 1249.

Fulton, R.J. and Halstead, E.C.
1972: Quaternary geology of the southern Canadian Cordillera; 24th International Geological Congress (Montreal), Guidebook for field excursion 02.

Fyles, J.G.
1963: Surficial geology of the Horne Lake and Parksville map-areas, Vancouver Island, British Columbia; Geological Survey of Canada, Memoir 318.

Garrison, R.E., Lutenauer, J.L., Grill, E.V., MacDonald, R.D., and Murray, J.W.
1969: Early diagenetic cementation of recent sands, Fraser River delta, British Columbia; Sedimentology, v. 12, p. 17-46.

Gary, M., McAfee, R. Jr., and Wolf, C.L. (ed).
1972: Glossary of Geology; American Geological Institute, Washington, D.C., 805 p.

Goldthwait, R.P. (ed.)
1971: Till, A Symposium; Ohio State University Press, Columbus Ohio, 402 p.

Gorman, E.L.
1974: Erosion of a storm drainage ditch southwest Marine Drive, University of British Columbia Endowment Lands; unpublished B.A.Sc. thesis, Department of Geology, University of British Columbia, Vancouver.

Hall, K.J. and Wiens, J.H.
1976: The quality of water in tributaries of the lower Fraser and sources of pollution; in The Uncertain Future of the Lower Fraser, ed. H.J. Dorcey; Westwater Research Centre, University of British Columbia Press, p. 50-83.

Halstead, E.C.
1957: Ground-water resources of Langley Municipality, British Columbia; Geological Survey of Canada, Water Supply Paper no. 327, scale 1 inch to 1/2 mile.

1959: Ground-water resources of Matsqui Municipality, British Columbia; Geological Survey of Canada, Water Supply Paper no. 328, scale 1 inch to 1/2 mile.

1961: Ground-water resources of Sumas, Chilliwack, and Kent municipalities, British Columbia; Geological Survey of Canada, Paper 60-29.

1966: Aldergrove test hole, Fraser Valley, British Columbia; Geological Survey of Canada, Paper 64-51.

Hansen, B.S. and Easterbrook, D.J.
1974: Stratigraphy and palynology of Late Quaternary sediments in Puget Lowland, Washington; Geological Society of America Bulletin, v. 85, p. 587-602.

Hansen, W.R., Eckel, E.B., Schaem, W.E., Lyle, R.E., George, W., and Chance, G.
1966: The Alaska earthquake, March 27, 1964: Field investigations and reconstruction effort; United States Geological Survey, Professional Paper 541.

Hebda, R.J., Hicock, S.R., and Armstrong, J.E.
1983: Paleocology of mid-Wisconsin sediments from Lynn canyon, Fraser Lowland, British Columbia; Geological Association of Canada, Annual Meeting, Program with Abstracts, v. 8, p. A31.

Hicock, S.R.
1976: Quaternary geology: Coquitlam-Port Moody area, British Columbia; unpublished M.Sc. thesis, Department of Geology, University of British Columbia, Vancouver.

1980: Pre-Fraser Pleistocene stratigraphy, geochronology, and paleoecology of the Georgia Depression, British Columbia; unpublished Ph.D. thesis University of Western Ontario, London.

Hicock, S.R. and Armstrong, J.E.
1981: Coquitlam Drift: a pre-Vashon Fraser glacial formation in the Fraser Lowland British Columbia; Canadian Journal of Earth Sciences, v. 18, no. 9, p. 1443-1451.

Hicock, S.R., Hebda, R.A., and Armstrong, J.E.
1982: Lag of the Fraser glacial maximum in the Pacific Northwest: pollen and macrofossil evidence from western Fraser Lowland, British Columbia; Canadian Journal of Earth Sciences, v. 19, no. 12, p. 2288-2296.

Hicock, S.R., Hobson, K., and Armstrong, J.E.
1982: Late Pleistocene proboscideans and early Fraser glacial sedimentation in eastern Fraser Lowland, British Columbia; Canadian Journal of Earth Sciences, v. 19, no. 5, p. 899-906.

Holland, W.D., vanRyswyk, A.L., and Kelley, C.C.
1957: Soil survey of Pitt Meadows Municipality; British Columbia Department of Agriculture, Preliminary Report no. 1.

Hoos, L.M. and Packman, G.A.
1974: The Fraser River Estuary, status of environmental knowledge to 1974; Environment Canada, Fisheries and Marine Services Branch, Special Estuary Series no. 1.

Hora, Z.D. and Basham, F.C.
1981: Sand and gravel study 1980, British Columbia, lower mainland; British Columbia Ministry of Energy, Mines, and Petroleum Resources, Geological Division, Mineral Resources Branch, Paper 1980-10.

Jones, R.
1977: Map of surficial materials of the southwestern Fraser Lowland; Fisheries and Environment Canada, Lands Directorate.

Johnston, W.A.
1921: Sedimentation of the Fraser River delta; Geological Survey of Canada, Memoir 125.

1963: Geology of the Fraser River delta map-area; Geological Survey of Canada, Memoir 135.

Kellerhals, P. and Murray, J.W.
1969: Tidal flats at Boundary Bay, Fraser River delta, British Columbia; Canadian Society of Petroleum Geologists Bulletin, v. 17, no. 1, p. 67-91.

Lapedes, D.L. (ed.)
1976: Dictionary of scientific and technical terms; McGraw-Hill, New York.

Leaming, S.F.
1968: Sand and gravel in the Strait of Georgia area; Geological Survey of Canada, Paper 66-60.

Legget, R.F.
1973: Cities and Geology; McGraw-Hill, New York.

Lim, Bien-Siew
1974: Urban geology of False Creek area (Vancouver, B.C.) and its foundation engineering applications; unpublished B.A.Sc. thesis, Department of Geology, University of British Columbia, Vancouver.

Lum, K.Y.
1975: Erosion of Point Grey seacliffs, University of British Columbia; unpublished B.A.Sc. thesis, Department of Geology, University of British Columbia, Vancouver.

Luttmerding, H.A.
1981: Soil survey of the Langley-Vancouver area; Resources and Analysis Branch, British Columbia Ministry of Environment, RAB Bulletin 18.
Volume 1: Soil map mosaics, lower Fraser Valley, scale 1:25 000.
Volume 2: Soil maps, southern Sunshine Coast and southern Coast Mountains, scale 1:50 000.
Volume 3: Description of soils.
Volume 4: Soil interpretations for specified engineering, forestry, and recreational land uses.
Volume 5: Soil interpretations for agricultural land uses and maps of land capability for agriculture.
Volume 6: Technical data: soil profile descriptions and laboratory analyses.

Luttmerding, H.A. and Sprout, P.N.
1966: Soil survey of Langley Municipality and Barnston Island; British Columbia Department of Agriculture, Preliminary Report No. 7, Scale 1:24 000.

1967: Soil survey of Agassiz area; British Columbia Department of Agriculture, Preliminary Report No. 8, scale 1:24 000

1968: Soil survey of Mission area; British Columbia Department of Agriculture, Preliminary Report No. 9, scale 1:24 000.

1969: Soil survey of Delta and Richmond Municipalities; British Columbia Department of Agriculture, Preliminary Report No. 10, scale 1:24 000.

1972: Soil survey of Maple Ridge, Pitt Meadows, and Coquitlam Municipalities; British Columbia Department of Agriculture Preliminary maps, scale 1:24 000.

Mathews, W.H.
1972: Geology of the Vancouver area of British Columbia; 24th International Geological Congress (Montreal), Guidebook for field excursion 05.

1975: Garibaldi geology, a popular guide; Geological Association of Canada, Cordilleran Section, Special Publication.

Mathews, W.H. and McTaggart, K.C.
1969: The Hope landslide, British Columbia; Geological Association of Canada, v. 20, p. 65-75.

Mathews, W.H. and Shepard, F.P.
1962: Sedimentation of the Fraser River delta, British Columbia; American Asociation of Petroleum Geologists, Bulletin, v. 46, no. 8, p. 1416-1438.

Mathews, W.H., Fyles, J.G., and Nasmith, H.W.
1970: Postglacial crustal movements in southwestern British Columbia and adjacent Washington State; Canadian Journal of Earth Sciences, v. 7, p. 690-702.

McLean, D.G.
1975: Marine erosion at Towers beach, University of British Columbia; unpublished B.A.Sc. thesis, Department of Civil Engineering, University of British Columbia, Vancouver.

Milliman, J.D.
1980: Sedimentation in the Fraser River and its estuary, southwestern British Columbia (Canada); Estuarine and Coastal Marine Science, v. 10, no. 6, p. 609-634.

Monger, J.W.H.
1970: Hope map-area, west half, British Columbia; Geological Survey of Canada Paper 69-47, 75 p., Map 12-1969, scale 1:250 000.

Monger, J.W.H. and Price, R.A.
1979: Geodynamic evolution of the Canadian Cordillera; Canadian Journal of Earth Sciences, v. 16, no. 3, p. 770-791.

Morris, W.V.
1968: Water; Energy, Mines and Resources, Inland Waters Branch, Ottawa.

Munshaw, G.
1976: The geomorphology of the Chilliwack valley; unpublished B.A.Sc. thesis, Department of Geology, University of British Columbia, Vancouver.

Nasmith, H., Mathews, W.H., and Rouse, G.E.
1967: Bridge River ash and some of the other recent ash beds in British Columbia; Geological Association of Canada, Proceedings, v. 4, no. 1, p. 163-170.

Parks, W.A.
1917: Report on the building and ornamental stones of Canada, Volume V; Department of Mines, Mines Branch, Ottawa, Publication 452.

Peck, R.B., Hanson, W.E., and Thorburn, T.H.
1953: Foundation Engineering; John Wiley & Sons, Inc., New York.

Peters, N.
1973: Pleistocene geology and geotechnical aspects of the proposed Pitt River bridge, Port Coquitlam, British Columbia; unpublished B.A.Sc. thesis, Department of Geology, University of British Columbia, Vancouver.

Philip, R.
1961: Geology and stability analysis of a road cut in North Vancouver, British Columbia; unpublished B.A.Sc. thesis, Department of Geology, University of British Columbia, Vancouver.

Powell, R.D.
1980: Holocene glaciomarine sediment deposition by tidewater glaciers in Glacier Bay, Alaska; unpublished Ph.D. thesis, Department of Geology, Ohio State University, Columbus.

Richter, C.F.
1958: Elementary Seismology; W.H. Freeman and Company, San Fransico, 750 p.

Roddick, J.A.
1965: Vancouver North, Coquitlam, and Pitt Lake map-areas, British Columbia; Geological Survey of Canada, Memoir 335.

Roddick, J.A. and Armstrong, J.E.
1965: Geology, Pitt Lake, British Columbia; Geological Survey of Canada, Map 1151A, scale 1 in. to 1 mile.

Rogers, G.C. and Hasegawa, H.S.
1978: A second look at the Vancouver Island earthquake of June 23, 1946; Seismological Society America Bulletin, v. 68, no. 3.

Runka, G.G. and Kelley, C.C.
1964: Soil survey of Matsqui Municipality and Sumas Mountain; British Columbia Department of Agriculture, Preliminary Report No. 6, scale 1:24 000.

Smaill, W. and Wynne-Edwards, R.M.
1933: Difficult caisson sinking for Vancouver water tunnel; Engineering News Record, v. III, p. 9.

Smith, R.R.
1971: A study of prehistoric landslide surface at Cheam Lake, east of Chilliwack, British Columbia; unpublished B.A.Sc. thesis, Department of Geology, University of British Columbia, Vancouver.

Sprout, P.N. and Kelley, C.C.
1961: Soil survey of Surrey Municipality; British Columbia Department of Agriculture, Preliminary Report no. 3, scale 1:24 000.

Tambouri, A.J.
1976: Regime studies of the lower Fraser; American Society of Civil Engineers, Proceedings of the Symposium on inland water for navigation, flood control, and water diversions, Colorado State University, Boulder, p. 1680-1699.

Varnes, D.J.
1978: Slope movement and types of processes; in Landslides: analysis and control, ed. R.L. Schuster and R.J. Schuster; Transportation Research Board, National Academy of Sciences, Washington, D.C., Special Report 176, Chapter 2, p. 12-33.

Waslenchuk, D.G.
1973: The analyses and correlation of the sediments from the Fraser River, Point Grey cliffs and beaches, and Spanish Banks at Vancouver, British Columbia; unpublished B.Sc. thesis, Department of Geology, University of British Columbia, Vancouver.

Whitham, K. and Hasegawa, H.S.
1975: The estimation of seismic risk in Canada – a review; Earth Physics Branch, v. 45, no. 2, p. 137-161, scale 1 inch to 500 miles.

GLOSSARY [1]

Ablation till: Loosely consolidated rock debris, formerly contained by a glacier, that accumulated in place as the ice melted; also referred to as meltout till (see **till**).

Absorption field: The area in which the effluent from a septic tank is dispersed.

Agricultural soil (pedological soil): A term used in soil classification to refer to the natural medium for the growth of land plants (see also discussion in *Applications of Quaternary Geology*).

Alkali: Any compound having highly basic qualities.

Amphibole: A group of dark, rock-forming ferromagnesian silicate minerals closely related in crystal form and composition; hornblende is by far the most common.

Amphibolite: A metamorphic rock consisting of amphibole and feldspar.

Aquifer: A groundwater reservoir that yields economically significant quantities of groundwater to wells and springs.

Argillite: A compact rock, derived either from shale or siltstone, that has undergone a higher degree of induration than either of them.

Armour rock: See **riprap.**

Atterberg limits (civil engineering): In a sediment, the water-content boundaries between the semiliquid and plastic states (known as the liquid limit) and between the plastic and semisolid state (known as the plastic limit).

Basalt: A dark-coloured volcanic rock made up calcium-rich feldspar and pyroxene in a glassy matrix.

Beach: In geological terminology a beach is an accumulation of loose waterborne material between the limits of low water and high water.

Bearing Capacity: The load per unit of area that the foundation material can safely support without excessive yield.

Bed: A subdivision of a stratified sequence of geological materials, normally consisting of relatively homogeneous material exhibiting some degree of lithologic unity, and separated from the material above and below by well defined boundary planes; for example, a sand bed between two clay beds.

Bedrock: A general term for the solid rock that underlies the unconsolidated materials.

Berm (civil engineering): A horizontal ledge cut between the foot and top of an embankment to stabilize the slope by intercepting sliding earth.

Biotite: A dark, rock-forming ferromagnesian silicate mineral of the mica group.

Breccia: A cemented mass of coarse, angular fragments of rock. It can be formed by several processes, the most common of which is volcanic explosion.

Bulk density: The weight of material divided by the volume it occupies including the volume of its pore spaces.

Channel: That portion of a river or stream carrying the main current.

Chert: A hard, dense sedimentary rock consisting dominantly of cryptocrystalline silica.

Chlorite: A group of rock-forming, usually greenish, ferromagnesian silicate minerals. They are widespread in low-grade metamorphic rocks and as alteration products of ferromagnesian minerals in plutonic rocks.

Clay: A mineral fragment smaller than 0.002 mm (see Fig. 4).

Colluvium (colluvial deposit): A general term applied to any loose unconsolidated material formed as a result of mass wasting processes, usually accumulated at the base of slopes.

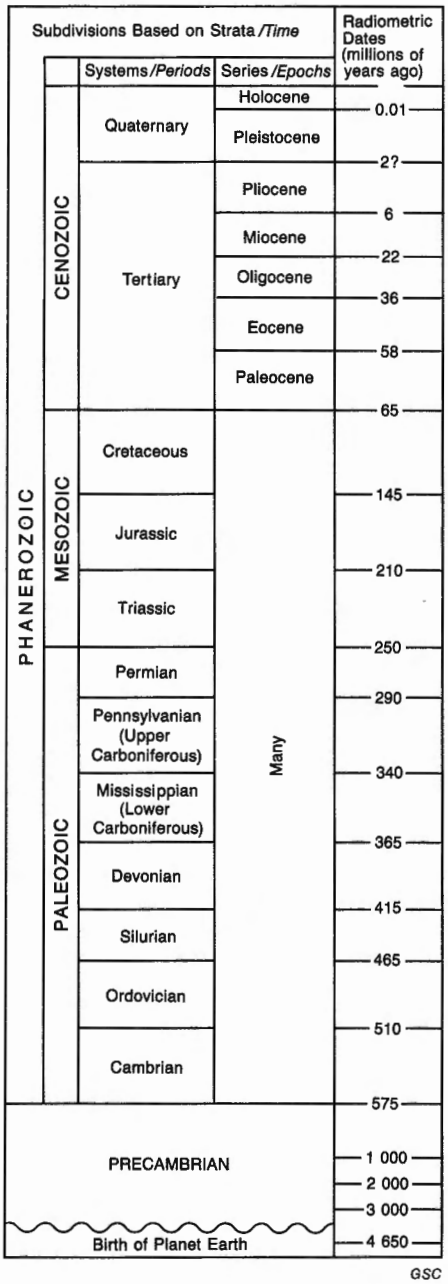

Figure 17. *Geologic column (Referred to in glossary).*

---

[1] Sources

Gary, M., McAfee, R., Jr., and Wolf, C.L. (editors)
1972: Glossary of Geology; American Geological Institute, Washington, D.C.

Lapedes, D.L. (ed.)
1976: Dictionary of Scientific and Technical Terms; McGraw-Hill, New York, New York.

Conglomerate: A coarse grained sedimentary rock, composed of cemented rounded pebbles, cobbles, and boulders in a matrix of sand and silt, and commonly cemented; the consolidated equivalent of gravel.

Correlate: As used in this report it means to compare in geological time and stratigraphic sequence two or more geological deposits or phenomena in separated areas.

Cretaceous: The final period of the Mesozoic Era (see Fig. 17).

Debris slide: The rapid downward movement of predominantly unconsolidated and incoherent earth and debris in which the mass does not show backward rotation but slides or rolls forward, forming an irregular hummocky deposit.

Deglaciation: The uncovering of a land area from beneath a glacier or ice sheet by the processes of retreat and melting of the ice.

Delta: The low, nearly flat alluvial tract of land deposited near the mouth of a river, commonly forming a triangular plain.

Desiccation: The complete or nearly complete drying out of unconsolidated sediments by loss of water from the pore spaces.

Detritus: A collective term for loose rock and mineral material that is worn off or removed directly by mechanical means from older rocks.

Diorite: A plutonic rock composed essentially of sodic plagioclase feldspar and hornblende, biotite, or pyroxene.

Drift: A general term applied to all material deposited by a glacier or streams (meltwater) emanating from a glacier.

Dyke: A tabular igneous intrusion cutting across the structure of the surrounding rock.

Dyke (levee): See definition of **levee.**

Earthquake: A sudden motion or trembling in the Earth caused by the abrupt release of slowly accumulated strain.

Epicentre: The point on the Earth's surface that is directly above the **focus** of an earthquake.

Era: A geologic-time unit including two or more periods, e.g. Mesozoic Era (see Fig. 17).

Erosion: The wearing away of rocks and unconsolidated materials by natural processes such as running water, waves, and wind.

Estuarine: Of, pertaining to, or formed in an estuary; an estuary is a drainage channel adjacent to the sea in which the tide ebbs and flows and where fresh water comes into contact with sea water.

Eustatic: Pertaining to simultaneous, world-wide change in sea level.

Fan delta: An accumulation of gently sloping alluvial fan deposits laid down in water.

Fan deposits: An accumulation of debris brought down by a high-gradient stream and deposited on the plain beneath, commonly where a notable change of slope occurs; the deposits spread out in the shape of a gently sloping fan.

Fault: A zone of rock fracture along which there has been displacement between two rock masses.

Feldspar: The most common mineral in the Earth's crust; it is a light-coloured silicate.

Ferromagnesian: Silicate minerals containing iron and magnesium.

Fiord: A long, narrow, winding, U-shaped, and steep-walled, generally deep inlet or arm of the sea which originated as a glacial-trough valley that was partially drowned by the sea.

Fiord lake: A lake occupying part of a former fiord which has been cut off from the sea.

Floodplain: The flat area adjacent to a stream channel which is built of sediment carried by the stream when it overflows its banks during flooding.

Flow till: Till formed in the terminal area of a glacier where the sediment within or on the ice surface melts out and flows down the glacier surface (see **till**).

Flow (volcanic): A tabular-shaped body of lava that consolidated from **magma** on the surface of the earth.

Fluvial deposit: A sedimentary deposit consisting of material transported by, suspended in, or laid down by a stream.

Focus (seismology): The true centre of an earthquake, within which the strain energy is first converted to elastic wave energy.

Foreset bed: The series of inclined layers accumulated as sediment rolls down the steep frontal slope of a delta.

Formation: A body of rock strata consisting dominantly of a certain lithologic type or having some unifying lithologic features; a primary unit in lithostratigraphy useful for mapping or description.

Foundation material: The geological material directly carrying the load of an engineering structure.

Geology: The study of the planet Earth. It is concerned with the origin of the planet, the material and morphology of the Earth, its history, and the processes that acted (and act) upon it to affect its historic and present form.

Geological boundary: The line separating two cartographic units on a geological map.

Geologic-climate unit: A term used for an inferred widespread climatic episode defined from a subdivision of Quaternay sediments, e.g. glaciation, interglaciation; the unit is normally time-transgressive.

Geological hazard: A naturally occurring or man-made geological condition or phenomenon that presents a risk or is a potential danger to life and property.

Geomorphology: That branch of both physiography and geology which deals with the form of the Earth, the general configuration of its surface, and the changes that take place in the evolution of landforms.

Glaciation: The formation, movement, and recession of glaciers or ice sheets.

Glacier: A large mass of ice formed, at least in part, on land by the compaction and recrystallization of snow, moving slowly by creep downslope or radially outward in all directions due to the stress of its own weight, and surviving from year to year.

Glaciofluvial deposit: A deposit laid down by meltwaters flowing from glacier ice.

Glaciolacustrine deposit: A deposit composed of suspended material brought by meltwater streams flowing into lakes bordering a glacier.

Glaciomarine deposit: The term glaciomarine deposits applies to poorly stratified to stratified deposits deposited by a glacier and floating ice at an ice-sea interface.

Gneiss: A coarse grained rock in which bands rich in granular minerals alternate with bands in which schistose minerals predominate.

Graben: An elongate, relatively depressed crustal block that is bounded by major faults on both its long sides.

Granitic rock: A term loosely applied to any light coloured, coarse grained plutonic rock consisting of quartz, feldspar, and mafic minerals, e.g. granite, granodiorite, and quartz diorite.

Granulite: A metamorphic rock consisting of even-sized, interlocking, nonoriented mineral grains.

Gravel: An unconsolidated accumulation of rounded rock fragments consisting predominantly of particles greater than 2 mm, such as pebbles, cobbles, and boulders (see also Fig. 4).

Greenstone: An old field term applied to any compact, dark green, altered or metamorphosed basic igneous rock that owes its colour to the presence of hornblende and chlorite; in most cases these rocks are amphibolites.

Greywacke: A hard, tough, firmly indurated sedimentary rock consisting of quartz, feldspar, and a variety of small, dark mineral and rock fragments embedded in a clayey matrix.

Groin (civil engineering): A barrier built out from a seashore or riverbank to protect the land from erosion and sand movements, among other functions.

Groundwater (groundwater table): Subsurface water that forms the zone of saturation. The upper boundary is the groundwater table.

Hardness (water): Quality of water that prevents lathering because of calcium and magnesium salts which form an insoluble residue when the water is used with soap.

Holocene: An epoch of the Quaternary Period (see Fig. 17).

Hornblende: See **amphibole.**

Humification: The process of development of humus or humic acid, especially by slow oxidation.

Hypersthene: One of pyroxene group of minerals.

Ice-contact deposit: Stratified drift deposited in contact with melting glacier ice.

Ice sheet: A glacier of considerable thickness and more than 50 000 km^2 in area.

Illite: A clay mineral.

Interbedded: Said of beds of geological material laid between or alternating with other material of different composition.

Intertidal: The part of the littoral zone above low tide mark.

Isostatic adjustment: The adjustment of the crust of the Earth to maintain equilibrium among units of varying mass and density. If huge quantities of ice (e.g. ice sheets) are loaded onto the crust in an area, the crust will be depressed by this load; if the ice is removed, the land surface will rise.

Joint: A fracture in bedrock along which no appreciable movement has occurred.

Kaolinite: A clay mineral.

Kettle hole: Bowl-shaped depressions formed by the melting out of a detached mass of stagnant ice that became buried in the glaciofluvial sediments during the melting of a glacier; kettles commonly contain a lake or swamp.

Lacustrine deposit: A deposit formed in a lake.

Lagoonal sediments: Deposits formed in a shallow body of water possessing a restricted connection with the sea.

Landslide: The descent of a mass of rock, unconsolidated deposits, and debris down a hill or mountain side.

Leachate: A solution obtained by leaching; e.g., water that has percolated through soil containing soluble substances and that contains certain amounts of these substances in solution.

Legend: Explanation of the units, symbols, and patterns (or colours), shown on a map or diagram. On a geological map it shows the sequence of rock units or surficial materials, according to age with the oldest at the bottom.

Levee (earth dyke): An artificial bank confining a stream channel or limiting areas subject to flooding.

Limestone: A sedimentary rock consisting chiefly of calcium carbonate.

Liquefaction: The transformation of unconsolidated sediment from a solid state to a fluid state.

Liquid limit: Water content of unconsolidated material at the point where it passes from a plastic solid to a turbid liquid as determined by standardized mechanical tests.

Lithology: The description of geological material on the basis of mineralogical composition, grain size, and colour.

Lithostratigraphy: Preliminary stratigraphy based only on the lithology of the units; the units are called lithostratigraphic units.

Littoral zone: Of or pertaining to the biogeographic zone between the high- and low-water marks.

Loam: A mixture of clay, silt, and sand (see Fig. 4).

Lodgment till: The till formed at the base of a glacier (see **till**).

Magma: Naturally occurring molten rock material, generated within the Earth from which igneous rocks are derived by crystallization of the chemical phases.

Magnetite: An iron oxide.

Map unit: A lithologic unit shown on a map.

Mass wasting: A term which includes all proceses by which unconsolidated geological material and rock fail and are transported downslope, predominantly en masse, by the direct application of gravity.

Meander: One of a series of somewhat regular, sharp, freely developing and sinuous curves, bends, loops, turns, or windings in the course of a stream. It is produced by a mature stream swinging from side to side as it flows across the floodplain.

Mechanical analysis: An analysis of the particle-size distribution of a sediment.

Meltwater: Water derived from the melting glacier ice; a stream flowing in, under, or from glacier ice.

Mesozoic: An era of geological time (see Fig. 17).

Metamorphic rock: Any rock derived from pre-existing rock by mineralogical, chemical, and structural changes, essentially in the solid state, in response to marked changes in temperature, pressure, shearing stress, chemical environment, generally at depth in the Earth's crust.

Metamorphism: The processes which produce a metamorphic rock.

Metasediment: A metamorphosed sedimentary rock.

Metavolcanic: A metamorphosed volcanic rock.

Mica: A group of prominent rock-forming ferromagnesian silicates.

Microtopography: Topography on a scale too small to show on maps; applied to features having relief as small as 1-10 cm and up to 50-100 m.

Migmatite: A composite rock composed of plutonic and metamorphic materials.

Mineral: A naturally formed chemical compound or element having characteristic crystal form and properties.

Montmorillonite: A group of expanding-lattice clay minerals.

Moraine: A mound, ridge, or other distinct accumulation of drift, deposited chiefly by direct glacial action, and having a constructional topography independent of control by the surface on which the drift lies.

Mudflow: A flowage of heterogeneous debris lubricated by a large amount of water.

Mudstone: A rock consisting of an indefinite mixture of clay, silt, and sand particles, the proportions varying from place to place, so that a more precise term is not possible.

Offset: Displacement of formerly contiguous bodies.

Opaque mineral: Said of a mineral that is impervious to visible light.

Outwash: Stratified sediments washed out from a glacier by meltwater streams and deposited in front of or beyond the margin of the active glacier.

Overbank deposit: Floodplain deposit laid down when a stream or river overflows its banks.

Paleozoic: An era of geological time (see Fig. 17).

Parent material (pedology): Partly weathered 'soil' material from which the 'soil' is formed; horizon C of the soil profile.

Peat: Unconsolidated deposit of slightly carbonized plant remains in a water-saturated setting, such as a bog, and of high moisture content.

Pedology: The scientific study of agricultural soil.

Pelite: A sedimentary rock composed of clay- and silt-size particles.

Period: A geologic-time unit longer than an epoch and a subdivision of an era (see Fig. 17).

Permeability: The property or capacity of geological materials for transmitting a fluid without impairment of the structure of the materials.

Physiography: The study of the genesis and evolution of landforms.

Pile foundation (civil engineering): A substructure supported on piles.

Pit run: A natural deposit of a mixture of gravel and sand before processing.

Plastic limit: The water-content boundary of a sediment between the plastic and semisolid states.

Plate tectonics: Global tectonics based on an Earth model characterized by a small number (10-25) of large, broad thick plates (blocks composed of areas of both continental and oceanic crust and mantle), each of which 'floats' on some viscous underlayer in the mantle and moves more or less independently of the others and grinds against them, with much of the dynamic activity concentrated along the periphery of the plates which are propelled from the rear by seafloor spreading.

Pleistocene: An epoch of the Quaternary Period (see Fig. 17).

Plutonic rock: A rock formed at considerable depth by crystallization of a magma or by chemical alteration.

Plutonism: A general term for the phenomena associated with the formation of plutonic rocks.

Porosity: The property of unconsolidated materials or rock containing interstices, whether isolated or connected.

Porphyritic: The texture of an igenous rock in which larger crystals are embedded in a finer groundmass which may be crystalline, glassy, or both.

Postglacial: Pertaining to the time interval since the last continental glacier ice withdrew from an area.

Preloaded: Indicates that the material has been subjected to a load that has partly consolidated it.

Proglacial: Immediately in front of or just beyond the outer limits of a glacier or ice sheet.

Pyroxene: Dark rock-forming ferromagnesian silicate.

Pyroclastic: A general term applied to detrital volcanic materials that have been explosively or aerially ejected from a volcanic vent.

Quartz: Crystalline silica, a common and important rock-forming mineral.

Quartz diorite: An igneous rock containing plagioclase feldspar, quartz, and hornblende and/or biotite.

Quartzite: A metamorphic rock consisting mainly of quartz.

Quaternary: A period in the Cenozoic Era (see Fig. 17).

Radiocarbon dating: A method of determining an age in years by measuring the concentration of radioactive carbon (^{14}C) in organic material. Carbon 14 is a heavy isotope of carbon with a half life of about 5660 years. The method works well up to about 50 000 years BP (Before Present, which is 1950).

Remolded soil: Unconsolidated material that has had its natural internal structure modified or disturbed by manipulation so that it loses shear strength and gains compressibility.

Richter scale: The range of numerical values of earthquake magnitude devised in 1935 by seismologist C.F. Richter (See text also).

Riprap: Broken rock used for revetment, to protect bluffs or structures exposed to wave action.

Rockfall: The relatively free falling or precipitous movement of a newly detached segment of bedrock from a steep slope.

Sand: Rock or mineral particles having a diameter in the range of 0.05 to 2.0 mm (see Fig. 4).

Sandstone: A medium grained sedimentary rock composed of sand-sized particles.

Scarp: A relatively straight steep cliff-like face or slope of considerable extent breaking the general continuity of the land by separating level or gently sloping surfaces lying at different levels.

Schist: A strongly foliated metamorphic rock.

Seafloor spreading: A hypothesis that the oceanic crust is increasing by convective upwelling of magma along the mid-oceanic ridges, and by a moving away, at a rate of 1-10 cm a year of the new material.

Sedimentary rock: Rocks resulting from the consolidation of loose sediment that has accumulated in layers.

Seismiscity: The phenomena of Earth movements; earthquakes are the most noticeable of these phenomena.

Sensitive clay: A clay in which the shear strength is reduced to a very small fraction of its former value on remolding at constant moisture content.

Shale: A thinly laminated aggregate of clay.

Shear: A deformation resulting from stresses that tend to cause contiguous parts of a body of material to slide relatively to each other.

Shear strength: The internal resistance of a material to shear stress.

Sill: A tabular igneous intrusion that parallels the planar structure of the rock it intrudes.

Silt: Rock or mineral fragments having a diameter in the range of 0.002 to 0.05 mm (see Fig. 4).

Siltstone: A lithified aggregate of silt grains.

Slate: A fine grained metamorphic rock formed from shale and possessing a well developed fissility.

Slope stability: The quality of permanence or resistance of a natural or artificial slope to failure by landslides.

Slump: A type of landslide characterized by the downward slipping of rock or unconsolidated material moving as a unit or several subsidiary units, characteristically with backward rotation on a horizontal axis parallel to the slope.

Soil mechanics: The science of the mechanical properties of a mass of loose or unbounded particles, particularly of their composition, shear resistance, and effects of water.

Strata: Formation or layer of geological material that consists throughout of approximately the same kind of rock material, visually separable from the layers above and below.

Stratigraphy: The branch of geology that deals with the definition and description of major and minor natural divisions of geological materials, particularly sediments and sedimentary rocks and their arrangement in chronological succession.

Subaerial: Formed, existing, or taking place on the land surface.

Subsurface geology: The study of the structure, thickness, facies, correlation, etc. of rock formations beneath land or seafloor surfaces by means of drilling and geophysical prospecting.

Surficial geology: The geology of the unconsolidated materials overlying bedrock.

Tectonic: Of, pertaining to, or designating the rock structure and external forms resulting from the deformation of the Earth's crust.

Tectonic landform: A landform produced by earth movements.

Tephra: A general term for all clastic rock material formed by volcanic explosion or aerial expulsion from a volcanic vent.

Terrace: Terraces and benches are relatively flat, horizontal, or gently inclined surfaces, which are bounded by a steeper ascending slope on one side and a steeper descending slope along the other side.

Terrestrial deposit: A sedimentary deposit laid down on land above tidal reach.

Tertiary: The first period of the Cenozoic Era (see Fig. 17).

Till: Predominantly unsorted, unstratified sediment carried and deposited directly by a glacier. Tills are normally separated into lodgment (basal), ablation (meltout), and flow tills. Lodgment till is deposited at the base of a glacier; ablation till is material largely carried within or on the surface of the glacier which melts out during deglaciation and settles on the land surface; flow till is formed in the terminal area of a glacier and is usually derived from ablation till which may become fluid during thawing of the ice and as a result may move downslope as a liquid or semi-plastic flow. All three types of till consist of heterogeneous mixtures of clay, silt, sand, gravel, and boulders varying widely in shape and size.

Time-transgressive: The term time-transgressive is the equivalent of diachronous and is said of a sedimentary unit related to a narrow depositional environment that shifted geographically with advancing time and whose age consequently varies from place to place in an area of deposition.

Topset bed: One of the nearly horizontal sediment layers deposited on the top surface of an advancing delta; it truncates or covers the edges of the seaward-lying **foreset beds.**

Tuff: A compacted deposit of volcanic ash and dust.

Unconsolidated sediments: A sediment whose particles are not cemented together (see also **surficial geology**).

Varve: A sedimentary bed or lamina or sequence of laminae deposited in a body of still water within one year's time, i.e., a thin pair of graded glaciolacustrine layers seasonally deposited, generally a lower, coarse grained summer layer, which grades upward into a fine grained winter layer; counting and correlation of varves have been used to measure the ages of glacial deposits.

Void ratio: The ratio of the volume of void space to the volume of solid substance in any material consisting of voids and solid material.

Volcanic rocks: The class of igneous rocks that have been poured out or ejected at or near the Earth's surface.

Volcanism: The process by which magma and its associated gases rise into the crust and are extruded onto the Earth's surface and into the atmosphere.

Water table: The surface between the zone of saturation and the zone of aeration; that surface of a body of unconfined groundwater at which the pressure is equal to that of the atmosphere.

Wisconsin: The final continental glacial stage (see Table 3).

Zircon: A mineral, a zirconium silicate.

METRIC CONVERSIONS

1 millimetre (mm)	=	0.0394 inches
1 centimetre (cm)	=	0.3937 inches
1 square centimeter (cm^2)	=	0.155 square inches
1 cubic centimetre (cm^3)	=	0.061 cubic inches
1 metre (m)	=	3.281 feet
1 square metre (m^2)	=	10.764 square feet
1 cubic metre (m^3)	=	35.314 cubic feet
1 cubic metre per second	=	35.314 cubic feet per second
1 kilometre (km)	=	0.621 miles or 3281 feet
1 square kilometre (km^2)	=	247.1 acres

1 gram (g)	=	0.0353 ounces
1 kilogram (kg)	=	2.2 pounds
1 tonne (1000 kg)	=	2204.62 pounds
1 hectare (ha)	=	2.471 acres
1 litre	=	0.21998 gallons or 1.7598 pints
0° Celsius (°C)	=	32° Fahrenheit
100° Celsius (°C)	=	212° Fahrenheit

°C = (°F-32) x 5/9

°F = 9/5(°C)+32